chanhvinh.com

Pressure regulator, metric VRPA

FESTO

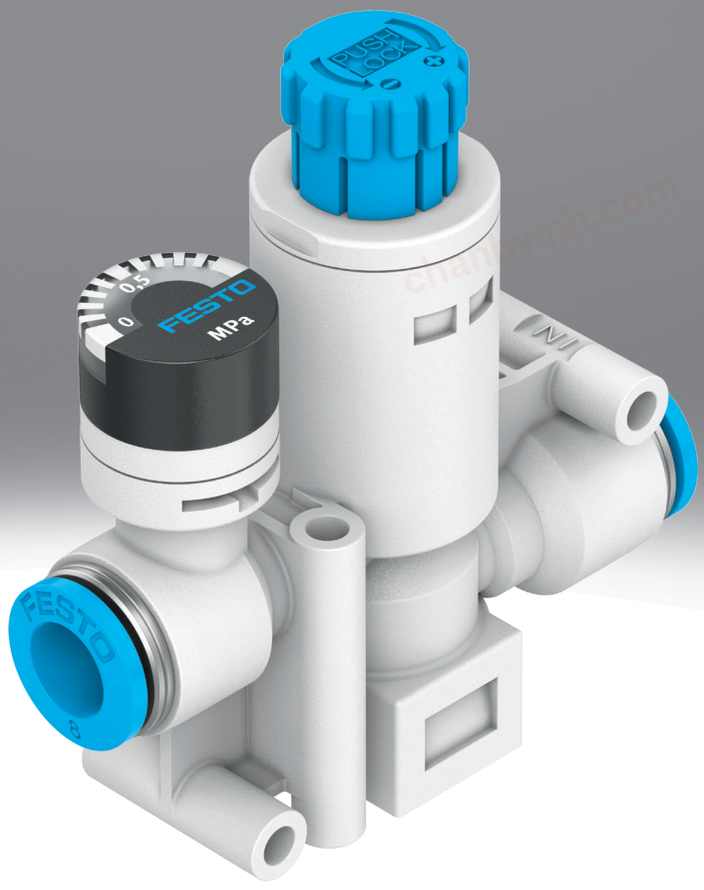

chanhvinh.com

Characteristics

At a glance

- Regulates the operating pressure independently of the fluctuating input pressure
- With secondary exhaust and with return flow function
- Piston regulator with through pressure supply
- Increased energy efficiency thanks to motion-specific pressure adjustment
- Directly actuated
- With or without pressure gauge
- Connections: push-in connector at both ends, thread/push-in connector

Diagrams

Further information ➔ vrpa

The diagrams shown in this document are also available online. These can be used to display precise values.

Design

[C] Inline

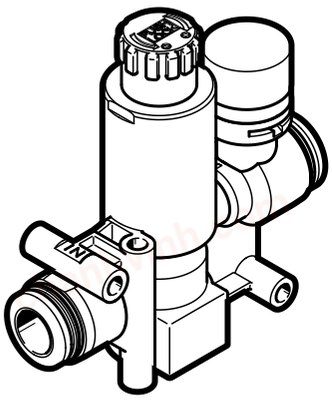

[L] L-shape

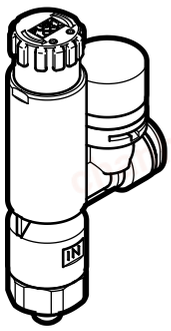

chanhvinh.com

Type code

001	Series	
VRPA	Pressure regulator	

002	Design	
C	Inline	
L	L-shape	

003	Pressure indication	
	Without pressure gauge	
M	With pressure gauge	

004	Pneumatic connection 1	
M5	M5	
Q4	Push-in connector 4 mm	
Q6	Push-in connector 6 mm	
Q8	Push-in connector 8 mm	
R14	R1/4	
R18	R1/8	

005	Pneumatic connection 2	
E	Same size as connection 1	
Q4	Push-in connector 4 mm	
Q6	Push-in connector 6 mm	
Q8	Push-in connector 8 mm	

chanhvinh.com

Datasheet

General technical data

Pneumatic connection, port 1	M5	R1/8	R1/4	QS-4	QS-6	QS-8
Pneumatic connection, port 2	QS-4, QS-6	QS-4, QS-6, QS-8	QS-6, QS-8	QS-4	QS-6	QS-8
Controller function	Output pressure constant, With secondary venting, With return flow function					
Pressure regulation range	0.1 ... 0.8 MPa					
Pressure regulation range	1 ... 8 bar					
Pressure regulation range	14.5 ... 116 psi					
Type of actuation	Manual					
Mounting position	optional					
Adjustment component	Rotary knob with detent					
Pressure gauge (ANALOG) or Pressure display (DIGITAL) [1]	With pressure gauge					
Type of mounting	Screw-in			With through-hole		
Type of seal on screwed plug	Sealing ring	Coating		–		
Rotatability	360°/no continuous swivelling permissible			–		
Nominal torque	0.8 Nm	–				
Tolerance for nominal tightening torque	± 20%	–				

1) For VRPA-CM-... and VRPA-LM-...

Function – without pressure gauge

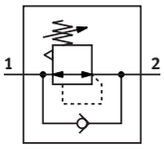

Function – with pressure gauge

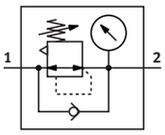

Operating and environmental conditions

Operating medium	Compressed air to ISO 8573-1:2010 [7:4:4]
Note on operating and pilot medium	Lubricated operation possible (in which case lubricated operation will always be required)
Ambient temperature	0 ... 60°C

Materials

Material housing	PBT
Material screwed plug	Nickel-plated brass
Material thread seal	PTFE
Material static seals	NBR
Note on materials	RoHS-compliant
LABS (PWIS) conformity	VDMA24364-B2-L
Cleanroom class	Class 4 according to ISO 14644-1

chanhvinh.com

Datasheet

Operating pressure p as a function of temperature t

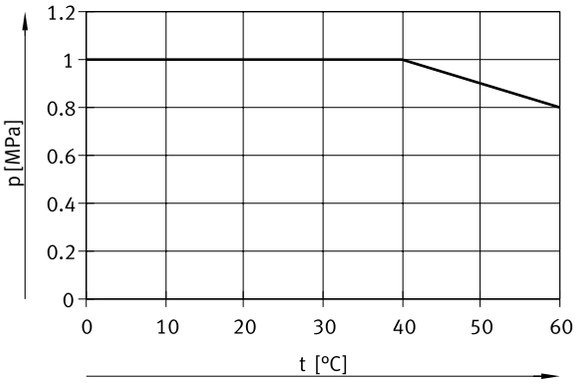

chanhvinh.com

Dimensions

Dimensions – Inline, VRPA-C, without pressure gauge Download CAD data ➔ www.festo.com

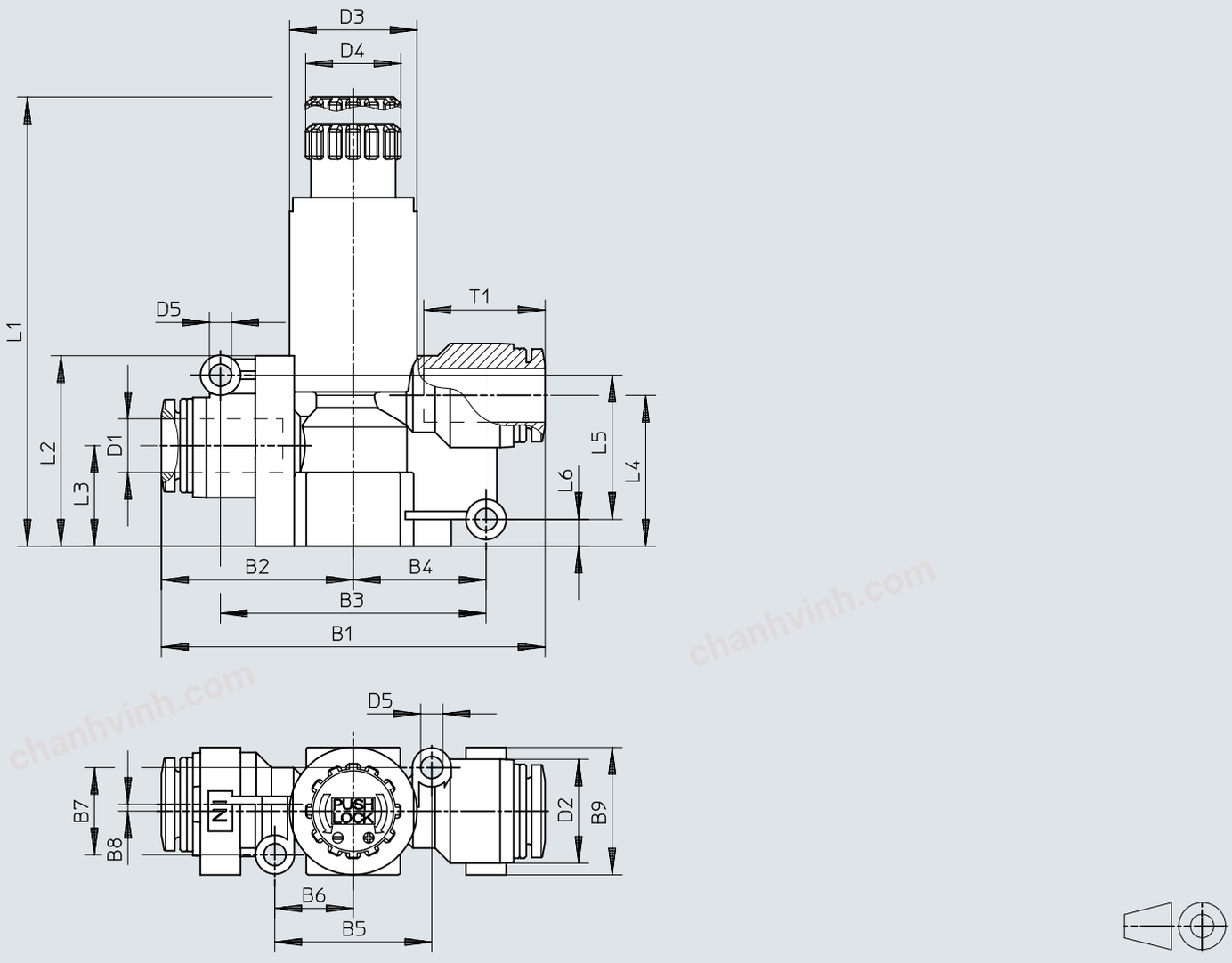

	B1	B2	B3	B4	B5	B6	B7	B8	B9	D1 ø	D2 ø
VRPA-C-Q4-E	44,4	22,2	30	15	20,6	10,3	9	1	15	4	11,5
VRPA-C-Q6-E	44,6	22,3	30	15	20,6	10,3	9	1	15	6	11,5
VRPA-C-Q8-E	57,2	28,6	39,6	19,8	23,4	11,7	13	1	19	8	15,5

	D3 ø	D4 ø	D5 ø	L1		L2	L3	L4	L5	L6	T1
				1)	2)						
VRPA-C-Q4-E	15	14,2	3,3	61,6	58,9	24,5	13	18,8	17	4,2	11,6
VRPA-C-Q6-E	15	14,2	3,3	61,6	58,9	24,5	13	18,8	17	4,2	11,9
VRPA-C-Q8-E	19	14,2	3,3	65,7	63	28,4	15	22,5	21,5	4	18,1

1) Unlocked
2) locked

chanhvinh.com

Dimensions

Dimensions – Inline, VRPA-CM, with pressure gauge

Download CAD data ➔ www.festo.com

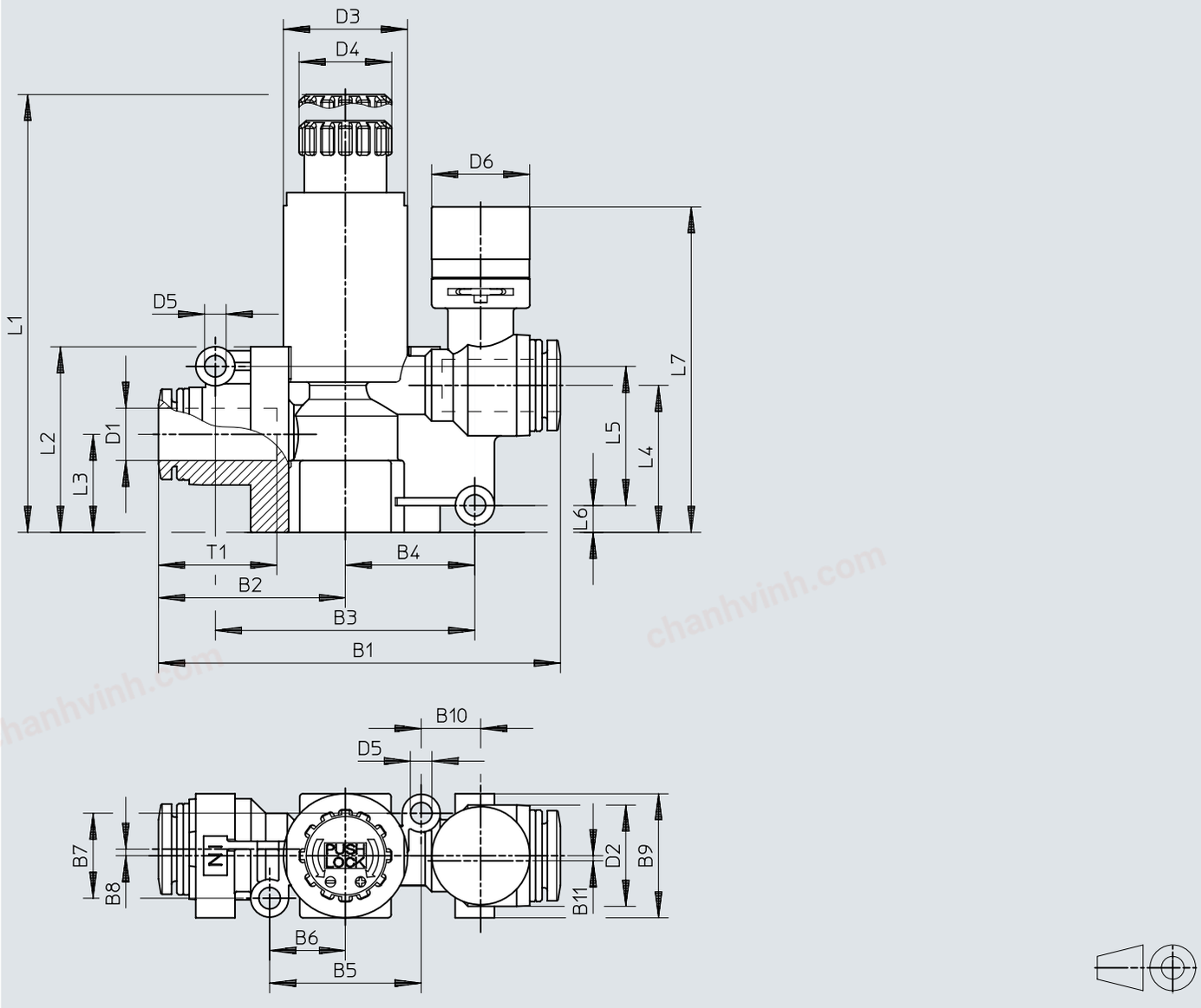

	B1	B2	B3	B4	B5	B6	B7	B8	B9	B10	B11	D1 ø	D2 ø
VRPA-CM-Q4-E	53,4	22,2	30	15	20,2	10,1	9	1	15	10,2	1	4	11,5
VRPA-CM-Q6-E	53,6	22,3	30	15	20,2	10,1	9	1	15	10,2	1	6	11,5
VRPA-CM-Q8-E	61,5	28,6	39,7	19,9	23,2	11,6	13	1	19	9,1	0	8	15,5

	D3 ø	D4 ø	D5 ø	D6 ø	L1		L2	L3	L4	L5	L6	L7	T1
					1)	2)							
VRPA-CM-Q4-E	15	14,2	3,3	15	61,6	58,9	24,5	13	18,8	17	4,2	43,3	11,6
VRPA-CM-Q6-E	15	14,2	3,3	15	61,6	58,9	24,5	13	18,8	17	4,2	43,3	11,9
VRPA-CM-Q8-E	19	14,2	3,3	15	65,7	63	28,4	15	22,5	21,3	4,1	49,8	18,1

1) Unlocked
2) locked

chanhvinh.com

Dimensions

Dimensions – L-shape, VRPA-LM, with pressure gauge Download CAD data ➔ www.festo.com

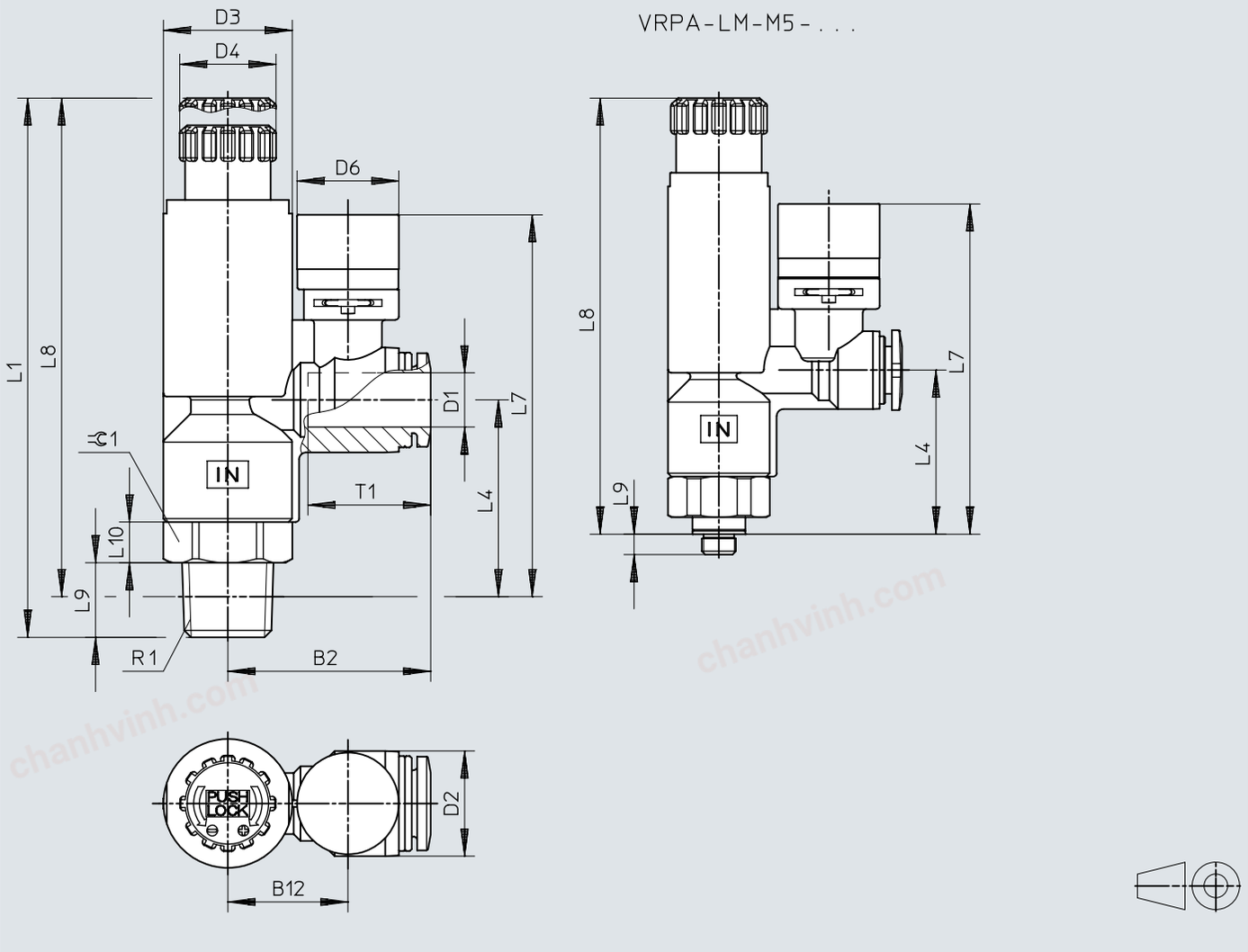

	B2	B12	D1 Ø	D2 Ø	D3 Ø	D4 Ø	D6 Ø
VRPA-LM-M5-Q4	26,9	16,2	4	11,5	15	14,2	15
VRPA-LM-M5-Q6	27	16,2	6	11,5	15	14,2	15
VRPA-LM-R18-Q4	26,9	16,2	4	11,5	15	14,2	15
VRPA-LM-R18-Q6	27	16,2	6	11,5	15	14,2	15
VRPA-LM-R18-Q8	28,4	16,2	8	15,5	15	14,2	15
VRPA-LM-R14-Q6	30	17,7	6	15,5	19	14,2	15
VRPA-LM-R14-Q8	29,9	17,7	8	15,5	19	14,2	15

	L1		L4	L7	L8		L9	L10	R1	T1	⌀ 1
	1)	2)			1)	2)					
VRPA-LM-M5-Q4	70	67,3	24,2	48,7	66,8	64,3	3	6	M5x0,8	11,6	14
VRPA-LM-M5-Q6	70	67,3	24,2	48,7	66,8	64,3	3	6	M5x0,8	11,9	14
VRPA-LM-R18-Q4	71,5	68,8	24,7	49,2	67,3	64,8	8	5	R1/8	11,6	14
VRPA-LM-R18-Q6	71,5	68,8	24,7	49,2	67,3	64,8	8	5	R1/8	11,9	14
VRPA-LM-R18-Q8	71,5	68,8	24,7	52	67,3	64,8	8	5	R1/8	18,1	14
VRPA-LM-R14-Q6	78,2	75,5	29	56,3	72	69,5	11	6	R1/4	17	17
VRPA-LM-R14-Q8	78,2	75,5	29	56,3	72	69,5	11	6	R1/4	18,1	17

1) Unlocked
2) locked

chanhvinh.com

Ordering data

Ordering data – inline without pressure gauge

	Pneumatic connection, port 1	Pneumatic connection, port 2	Standard nominal flow rate	Product weight	Part no.	Type
	QS-4	QS-4	80 l/min	19 g	**8086000**	**VRPA-C-Q4-E**
	QS-6	QS-6	90 l/min	20 g	**8086001**	**VRPA-C-Q6-E**
	QS-8	QS-8	130 l/min	33 g	**8086002**	**VRPA-C-Q8-E**

Ordering data – inline with pressure gauge

	Pneumatic connection, port 1	Pneumatic connection, port 2	Standard nominal flow rate	Product weight	Part no.	Type
	QS-4	QS-4	80 l/min	23 g	**8086003**	**VRPA-CM-Q4-E**
	QS-6	QS-6	90 l/min		**8086004**	**VRPA-CM-Q6-E**
	QS-8	QS-8	125 l/min	36 g	**8086005**	**VRPA-CM-Q8-E**

Ordering data – L-shape with pressure gauge

	Pneumatic connection, port 1	Pneumatic connection, port 2	Standard nominal flow rate	Product weight	Part no.	Type
	M5	QS-4	80 l/min	29 g	**8086007**	**VRPA-LM-M5-Q4**
		QS-6	90 l/min		**8086008**	**VRPA-LM-M5-Q6**
	R1/8	QS-4			**8086009**	**VRPA-LM-R18-Q4**
		QS-6	100 l/min		**8086010**	**VRPA-LM-R18-Q6**
		QS-8	110 l/min	31 g	**8086011**	**VRPA-LM-R18-Q8**
	R1/4	QS-6	115 l/min	49 g	**8086012**	**VRPA-LM-R14-Q6**
		QS-8	130 l/min		**8086013**	**VRPA-LM-R14-Q8**