chanhvinh.com

Valve control module VAEM

FESTO

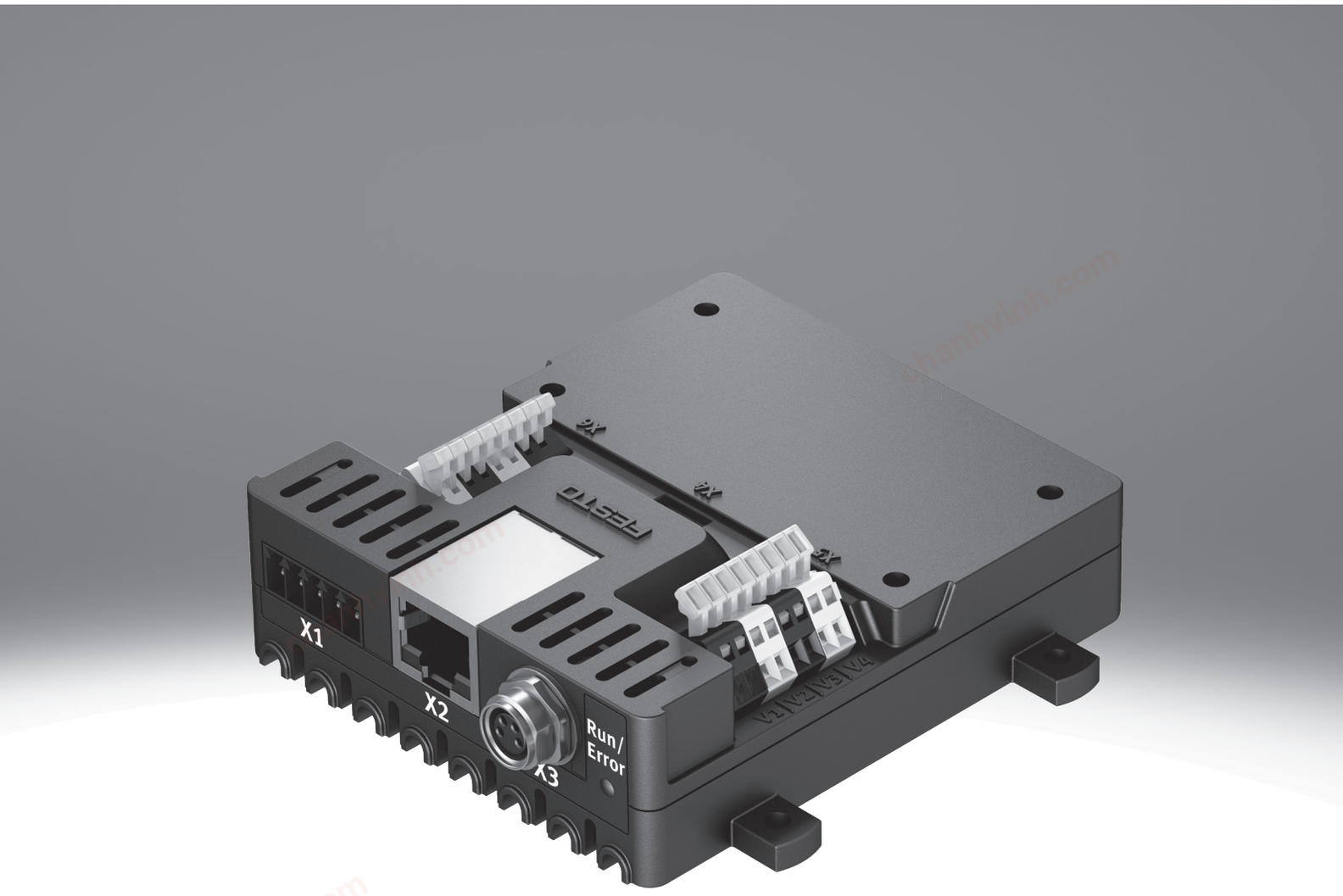

chanhvinh.com

Characteristics

At a glance Link vaem

Overview:
- 8 channels for actuating valves, can be individually controlled
- Maximum precision through current control
- Very fast valve actuation with a time resolution of 0.2 ms
- Very easy parameterisation and diagnostics of solenoid valves via graphical user interface (GUI)
- Control via graphical user interface (GUI), Ethernet interface or RS232 interface as well as external 24 V trigger input
- Compact and easy to integrate

Function:
- The valve control module VAEM is an electronic control unit with integrated, adjustable holding current reduction for controlling up to 8 solenoid valves.
- It communicates using the ASCII protocol via a communication interface according to the client-server principle

Valve control function:
- Setting/reading the nominal voltage
- Selecting the valve/reading the valve selection
- Setting/reading the switching time
- Setting/reading the delay time
- Setting/reading the pickup time
- Setting/reading the pickup current
- Setting/reading the holding current
- Setting/reading the current reduction time

Operating mode, internal start:
- The start command is transmitted from the software to the valve control module via the RS232 interface or the Ethernet interface
- The opening time of the selected valves is determined based on the previously stored parameter values

Operating mode, external start:
- The start command is triggered by an external trigger signal

Operating mode, manual trigger:
- The start command is triggered by an external trigger signal.
- The opening time of the selected valves is the same as the length of the trigger signal.

Holding current reduction:
- The integrated holding current reduction reduces the current consumption to the set holding current after the adjustable pickup time has elapsed
- Reduces the heat generation of the solenoid valve coil
- Increasing the service life of solenoid valves
- Lower power consumption
- Improves the switching times of solenoid valves

chanhvinh.com

Characteristics

Allocation

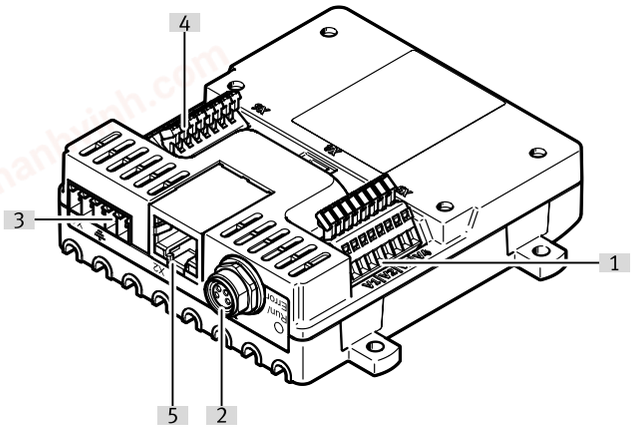

[1] Valve outputs 1... 4
[2] RS232 interface
[3] Power supply, trigger input
[4] Valve outputs 5... 8
[5] Ethernet interface

Pin allocation

[V1] Variant 1

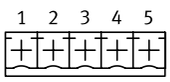

Power supply, trigger input
- Pin 1:Power supply 24 V DC
- Pin 2:Power supply GND
- Pin 3:FE
- Pin 4:Trigger input GND
- Pin 5:Trigger input 24 V DC

[V2] Variant 2

1	2	3	4	5	6	7	8

Valve outputs 1 ... 4
- Pin 1 and 2:Connection of valve 1
- Pin 3 and 4 :Connection of valve 2
- Pin 5 and 6:Connection of valve 3
- Pin 7 and 8:Connection of valve 4

[V3] Variant 3

1	2	3	4	5	6	7	8

Valve outputs 5 ... 8
- Pin 1 and 2:Connection of valve 8
- Pin 3 and 4:Connection of valve 7
- Pin 5 and 6:Connection of valve 6
- Pin 7 and 8:Connection of valve 5

[V4] Variant 4

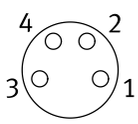

RS232 interface
- Pin 1:GND
- Pin 2:TxD
- Pin 3:RxD
- Pin 4:NC

chanhvinh.com

Type code

001	Series	
VAEM	Electrical module	

002	Module function	
V	Valve control	

003	Valve control	
S8	Individual connection 8x	

004	Bus protocol/activation	
EPRS2	EtherNet and RS232	

chanhvinh.com

Datasheet

Operating and ambient conditions

Storage temperature	-20 ... 70°C
Ambient temperature	0 ... 50°C
Degree of protection	IP20
Corrosion resistance class CRC [1]	0 - No corrosion stress
CE mark (see declaration of conformity) [2]	To EU EMC Directive To EU Low Voltage Directive
UKCA marking (see declaration of conformity)[3]	To UK instructions for EMC To UK RoHS instructions
Shock resistance	Shock test with severity level 2 to FN 942017-5 and EN 60068-2-27
Vibration resistance	Transport application test with severity level 2 to FN 942017-4 and EN 60068-2-6
Approval	RCM trademark
Relative air humidity	0 - 95%, Non-condensing
Nominal altitude of use	<= 2000 m NHN

1) Further information www.festo.com/x/topic/kbk

2) Please refer to the declaration of conformity for the area of use: www.festo.com/catalogue/... → Support/Downloads.
If the devices are subject to usage restrictions in residential, commercial or light-industrial environments, further measures for the reduction of the emitted interference may be necessary.

3) Please refer to the declaration of conformity for the area of use: www.festo.com/catalogue/... → Support/Downloads.
If the devices are subject to usage restrictions in residential, commercial or light-industrial environments, further measures for the reduction of the emitted interference may be necessary.

Communication interface

Communication interface, protocol	ASCII via RS232
Communication interface, connection type	Socket
Communication interface, galvanic isolation	no
Communication interface, connection technology	M8x1, A-coded according to EN 61076-2-104
Communication interface, number of pins/wires	4
Communication interface, function	Parameterisation and commissioning
Communication interface, transmission rate	9.6 - 115.2 kBd

Electrical connection output

Electrical connection output, function	Switching output
Electrical connection output, connection type	2x terminal strip
Electrical connection output, connector system	Spring-loaded terminal
Electrical connection output, number of connections/cores	8
Electrical connection for output, conductor cross section	0.08 ... 0.5 mm²

Ethernet interface

Ethernet interface, connection type	Socket
Ethernet interface, connection system	RJ45
Ethernet interface, transmission rate	10/100 Mbit/s
Ethernet interface, function	Parameterisation and commissioning
Ethernet interface, protocol	Modbus® TCP

chanhvinh.com

Datasheet

Technical data – Electrical components	
Nominal operating voltage DC	24 V
Permissible voltage fluctuations	+/- 10%
Load voltage range DC	8 ... 24 V
Inrush current, per output	20 ... 1,000 mA
Inrush current, total	4 A
Holding current, per output	20 ... 400 mA
Holding current, total	1.8 A
Inrush time	100 ms
Time resolution	0.2 ms
Trigger level	Level 14 V ... 24 V
Reverse polarity protection	For operating voltage
Pollution degree	2

Power supply	
power supply, connection system	Circuit board connector, contact spacing 3.5 mm
Power supply, number of pins/wires	5
Power supply, function	Digital trigger input, Power supply
Power supply, connection type	Plugs

Technical data – Mechanical components	
Dimensions (W x L x H)	92 mm x 100 mm x 28 mm
Product weight	98 g
Type of mounting	With through-hole

Materials	
Material housing	PA
Housing colour	Black
Note on materials	RoHS-compliant

chanhvinh.com

Dimensions

Dimensions – VAEM-... Download CAD data www.festo.com

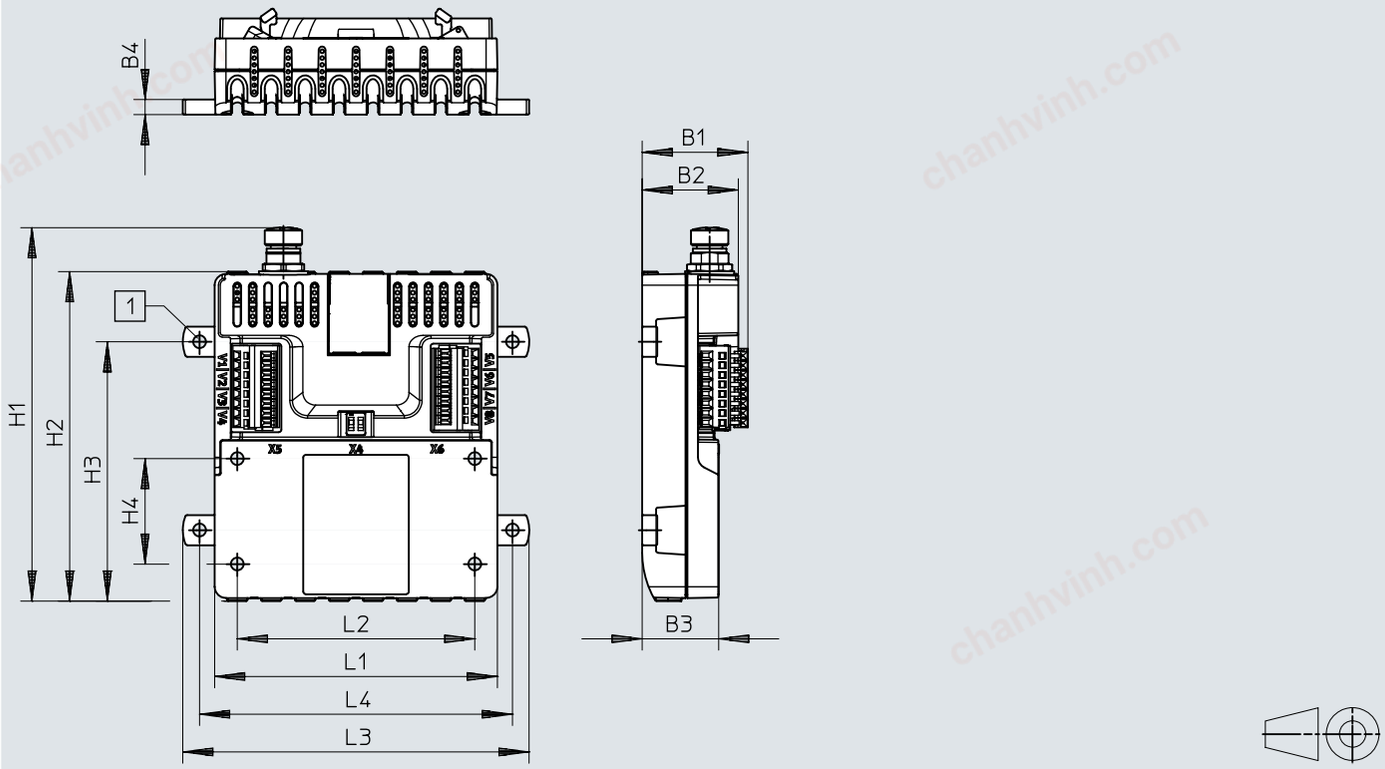

[1] Mounting holes Ø 3.4 for socket head screw M3

	B1	B2	B3	B4	H1	H2	H3	H4	L1	L2	L3	L4
VAEM	28	25,5	20,3	4	99,1	87,4	50	28	75	63	91,9	83

chanhvinh.com

Dimensions

Dimensions – VAME-V3-H-M3 Download CAD data www.festo.com

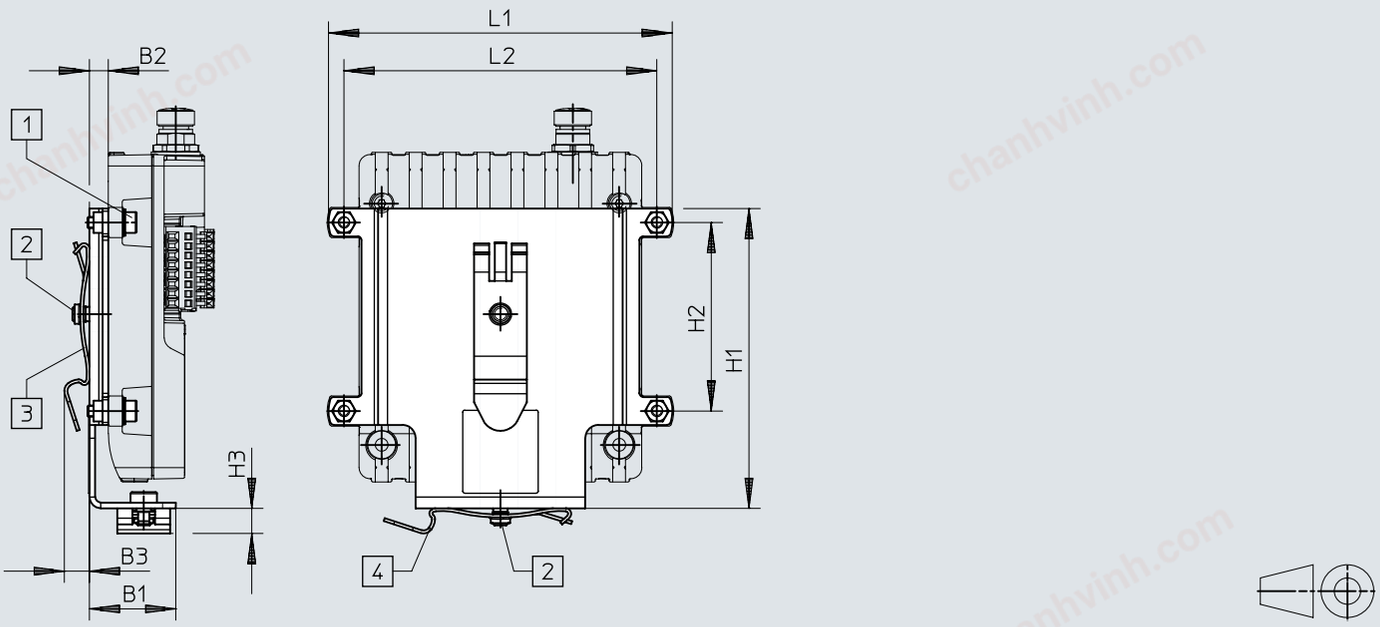

[1] Ø 3.2 for socket head screw M3
[2] Ø 4.2 for socket head screw M4
[3] Mounting position of clamp at the rear
[4] Mounting position of clamp underneath

	B1	B2	B3	H1	H2	H3	L1	L2
VAME-V3-H-M3	22,9	5	6,7	79,5	50	6,6	91,2	83

chanhvinh.com

Ordering data

Valve control module VAEM				
	Max. number of outputs	Electrical connection output, number of connections/cores	Part no.	Type
	8	8	**8088772**	**VAEM-V-S8EPRS2**

chanhvinh.com

Peripherals

Valve control module VAEM

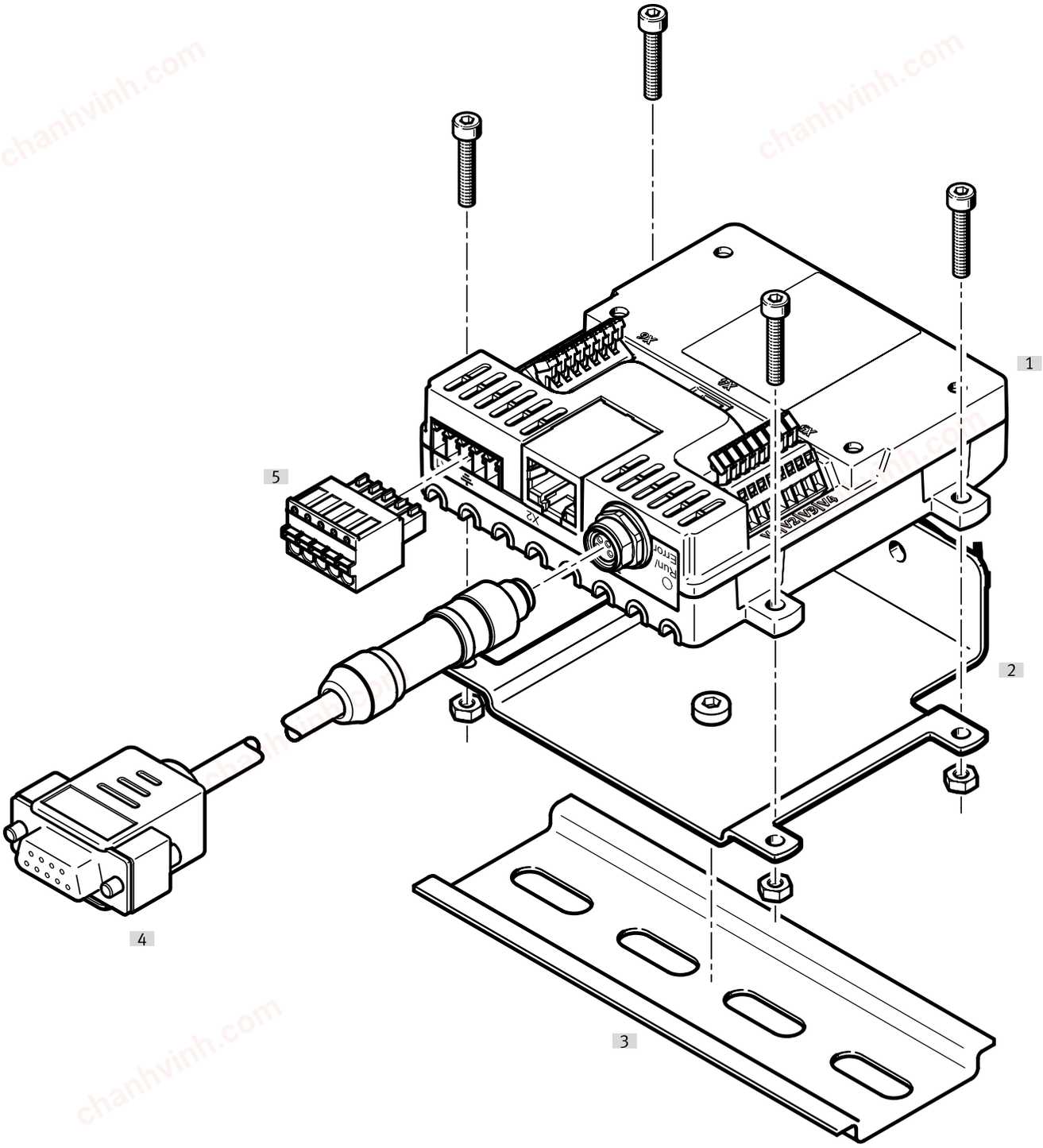

Accessories			→ Link
	Type/order code	Description	
[1]	Valve control module	–	vaem
[2]	H-rail mounting	–	11
[3]	H-rail	–	11
[4]	Connecting cable	–	11
[5]	Terminal strip	–	11

chanhvinh.com

Accessories

Terminal strip, for valve control module

	Electrical connection 2, connector system	Part no.	Type
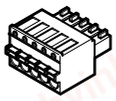	Spring-loaded terminal	**8106756**	**NECC-L8G5-C1**

H-rail mounting, for H-rail according to EN 60715

	Type of mounting	Part no.	Type
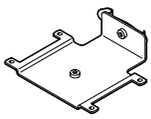	With through-hole	**8108940**	**VAME-V3-H-M3**

Connecting cable

	Electrical connection 1, connection type	Electrical connection 1, cable outlet	Electrical connection 1, connector system	Cable length	Part no.	Type
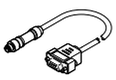	Plugs	Straight	M8x1, A-coded, to EN 61076-2-104	1.5 m	**8099218**	**NEBC-M8G4-ES-1.5-N-SB-S1G9-RS2-S7**
				2.5 m	**8086524**	**NEBC-M8G4-ES-2.5-N-SB-S1G9-RS2-S7**

H-rail, according to EN 60715

	Short type code	Part no.	Type
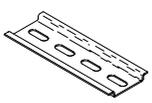	NRH	**35430**	**NRH-35-2000**

Adapter plate, for mounting the dispense head and valve control module VTOE on the electric slides EGSK-20, EGSK-26, EGSC-25, EGSC-32

	Size	Part no.	Type
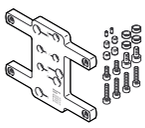	20 25 26 32	**8140776**	**EHAM-MA-E19-25-V3**