chanhvinh.com

Solenoid coil VACF

FESTO

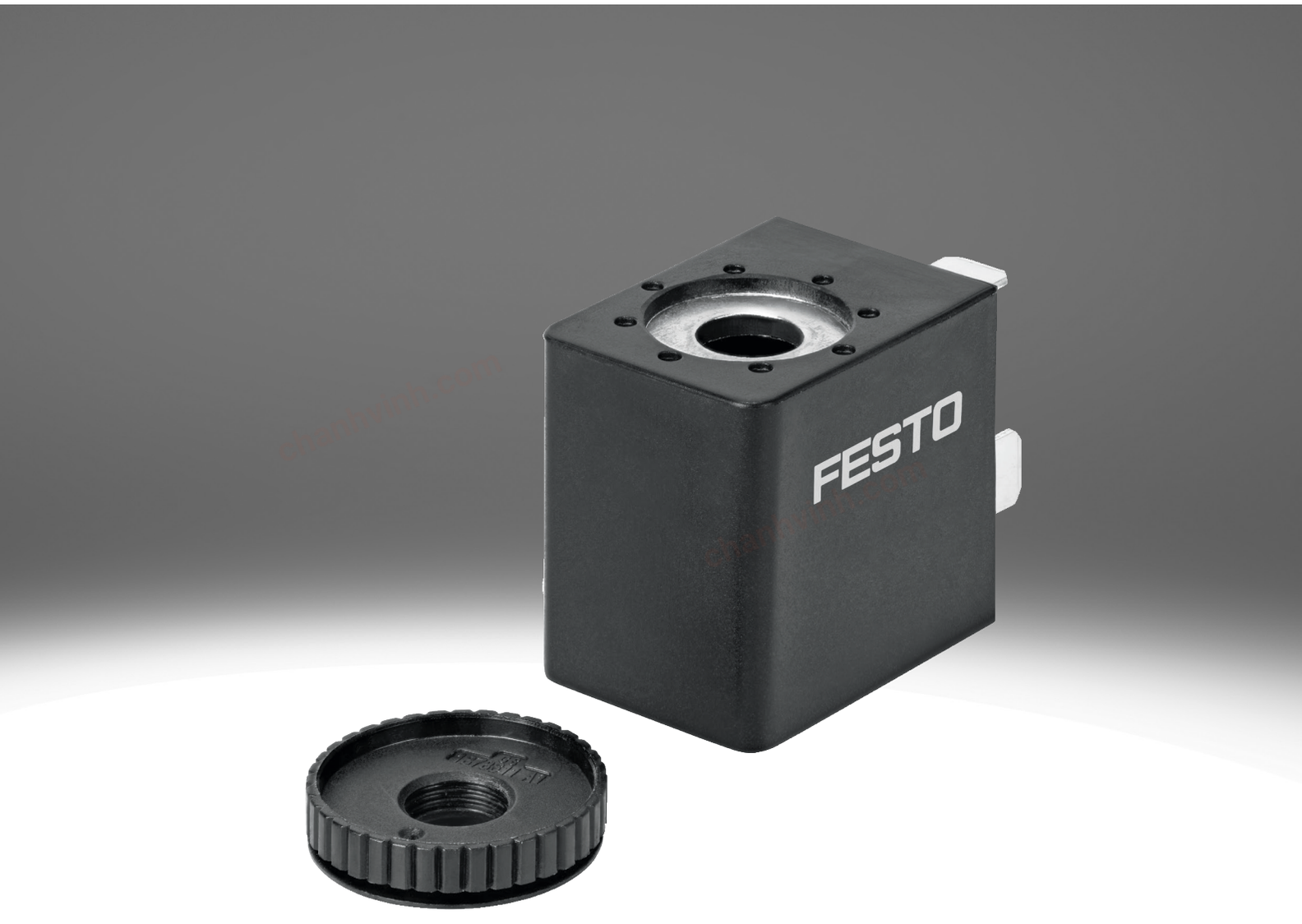

chanhvinh.com

Type code

001	Series	
VACF	Solenoid coil VACF	

002	Solenoid coil type	
A	Solenoid coil size 30/8	
B	Solenoid coil, size 22/8	

003	Electrical connection	
A1	Plug pattern type A, to EN 175301-803	
B1	Connection pattern type B, to EN 175 301	
B2	Connection pattern type B, industry standard	
C1	Plug pattern type C, to EN 175301-803	
E1	Plug pattern type C, industry standard	
K1	Cable	
R1	Individual connector M8, 4-pin	
R3	Single plug M12 A-coded, according to EN 61076-2-101	
R4	Single plug M12 A-coded, pin assignment according to DESINA	
R8	Individual connector M8, 3-pin	

004	Nominal operating voltage	
1	24 V DC	
1A	24 V AC/50-60 Hz	
3A	230 V AC/50-60 Hz	
3W	230 V AC/240 V AC/50-60 Hz	
5	12 V DC	
7	48 V DC	
7A	48 V AC/50-60 Hz	
16B	120 V AC/60 Hz and 110V AC/50-60 Hz	

005	Circuitry	
	None	
RA	Holding current reduction, analogue, with integrated protective circuit	

006	Display	
	None	
L	LED	

007	Cable length [m]	
	Without	
1	1 m	
5	5 m	
10	10 m	
20	20 m	

008	EX certification EU	
	None	
EX4	II 2GD	

009	Type of ignition protection	
	None	
M	Encapsulation	

chanhvinh.com

Datasheet

General technical data - Solenoid coils width 30 mm for Armature tube 8 mm, with electrical connection form A



Electrical connection 1, connection type	Plug
Electrical connection 1, connector system	Connection pattern type A based on EN 175301-803
Electrical connection 1, number of connections/cores	3
Electrical connection 1, type of mounting	Central screw M3
Type of actuation	Electrical
Conforms to standard	IEC 61010-1
Mounting position	Any
Type of mounting	Via knurled nut

Electrical data - Solenoid coils width 30 mm for Armature tube 8 mm, with electrical connection form A

Nominal operating voltage	24 V DC	24 V AC/50-60 Hz	230 V AC/240 V AC/50-60 Hz	12 V DC	48 V DC	48 V AC/50-60 Hz	120 V AC/60 Hz and 110V AC/50-60 Hz
Characteristic coil data	24 V DC: 2.6 W	24 V AC: 50/60 Hz, pick-up power 2.5 VA, holding power 1.7 VA	230/240 V AC: 50/60 Hz, pick-up power 3.9 VA, holding power 2.8 VA	12 V DC: 2.8 W	48 V DC: 2.8 W	48 V AC: 50/60 Hz, pick-up power 2.5 VA, holding power 1.7 VA	110/120 V AC: 50/60 Hz, pick-up power 2.7 VA, holding power 1.9 VA
Permissible voltage fluctuations	+/-10%						
Immunity to surge	–		4	–			2.5
Duty cycle	100%						
Degree of protection	IP65						
Insulation material class	H						
Pollution degree	–		2	–			2

Materials - Solenoid coils width 30 mm for Armature tube 8 mm, with electrical connection form A

Material solenoid coil	Copper, Steel, Thermoplastic
Material housing	PA, Steel
Material winding	Copper
Note on materials	RoHS compliant
LABS (PWIS) conformity	VDMA24364-B1/B2-L

chanhvinh.com

Datasheet

Operating and environmental conditions - Solenoid coils width 30 mm for Armature tube 8 mm, with electrical connection form A

Nominal operating voltage	24 V DC	24 V AC/50-60 Hz	230 V AC/240 V AC/50-60 Hz	12 V DC	48 V DC	48 V AC/50-60 Hz	120 V AC/60 Hz and 110V AC/50-60 Hz
Ambient temperature	-20 ... 60°C						
Media temperature	-20 ... 50°C						
Restrictions for environmental and media temperature	-20 - 50°C						
Corrosion resistance class CRC [1]	2 - Moderate corrosion stress						
CE mark (see declaration of conformity) [2]	–		To EU Low Voltage Directive	–			To EU Low Voltage Directive
UKCA marking (see declaration of conformity)[3]	–		To UK regulations for electrical equipment	–			To UK regulations for electrical equipment
Approval	c UL us - Recognised (Oil)						
Maritime classification [4]	See certificate						
Certificate issuing authority	DNVGL-TAA000011J UL MH18122						

1) More information www.festo.com/x/topic/kbk
2) More information www.festo.com/catalogue/... Support/Downloads.
3) More information www.festo.com/catalogue/... Support/Downloads.
4) More information www.festo.com/catalogue/... Support/Downloads.

General technical data - Solenoid coils width 22 mm for armature tube 8 mm, with electrical connection form B, to EN 175301-803

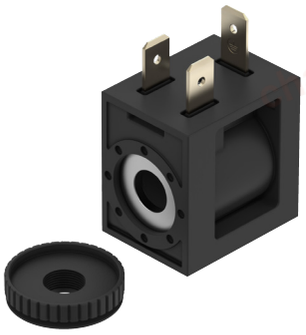

Electrical connection 1, connection type	Plug
Electrical connection 1, connector system	Connection pattern type B according to EN 175301-803
Electrical connection 1, number of connections/cores	3
Electrical connection 1, type of mounting	Central screw M3
Type of actuation	Electrical
Conforms to standard	IEC 61010-1
Mounting position	Any
Type of mounting	Via knurled nut

Electrical data - Solenoid coils width 22 mm for armature tube 8 mm, with electrical connection form B, to EN 175301-803

Power consumption	None	4.5 W
Characteristic coil data	24 V DC: 3.3 W	24 V DC: 4.5 W
Permissible voltage fluctuations	+/-10%	
Immunity to surge	–	
Duty cycle	100%	
Degree of protection	IP65	
Insulation material class	H	
Pollution degree	–	

chanhvinh.com

Datasheet

Materials - Solenoid coils width 22 mm for armature tube 8 mm, with electrical connection form B, to EN 175301-803	
Material solenoid coil	Copper, Steel, Thermoplastic
Material housing	PA, Steel
Material winding	Copper
Note on materials	RoHS compliant
LABS (PWIS) conformity	VDMA24364-B1/B2-L

Operating and environmental conditions - Solenoid coils width 22 mm for armature tube 8 mm, with electrical connection form B, to EN 175301-803		
Power consumption	None	4.5 W
Ambient temperature	-20 ... 60°C	-5 ... 40°C
Media temperature	-20 ... 60°C	-5 ... 40°C
Restrictions for environmental and media temperature	-20 - 50°C, with block mounting	–
Corrosion resistance class CRC [1]	2 - Moderate corrosion stress	
CE mark (see declaration of conformity) [2]	–	
UKCA marking (see declaration of conformity) [3]	–	
Approval	c UL us - Recognised (Oil)	–
Maritime classification [4]	–	
Certificate issuing authority	UL MH18122	–

1) More information at www.festo.com/x/topic/kbk
2) More information www.festo.com/catalogue/... Support/Downloads.
3) More information www.festo.com/catalogue/... Support/Downloads.
4) More information www.festo.com/catalogue/... Support/Downloads.

General technical data - Solenoid coils width 22 mm for armature tube 8 mm, with electrical connection form B, according to industry standard

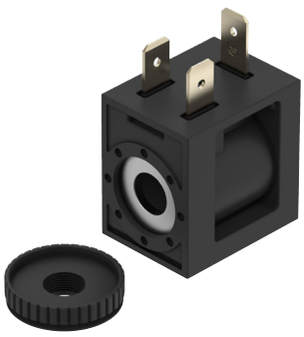

Electrical connection 1, connection type	Plug
Electrical connection 1, connector system	Plug pattern type B to industry standard, 11 mm
Electrical connection 1, number of connections/cores	3
Electrical connection 1, type of mounting	Central screw M3
Type of actuation	Electrical
Conforms to standard	IEC 61010-1
Mounting position	Any
Type of mounting	Via knurled nut

chanhvinh.com

Datasheet

Electrical data - Solenoid coils width 22 mm for armature tube 8 mm, with electrical connection form B, to industry standard

Nominal operating voltage	24 V DC	24 V AC/50-60 Hz	230 V AC/240 V AC/50-60 Hz	12 V DC	48 V DC	48 V AC/50-60 Hz	120 V AC/60 Hz and 110V AC/50-60 Hz
Characteristic coil data	24 V DC: 3.3 W	24 V AC: 50/60 Hz, pick-up power 3.9 VA, holding power 2.6 VA	230/240 V AC: 50/60 Hz, pick-up power 5.8 VA, holding power 4.6 VA	12 V DC: 3.4 W	48 V DC: 3.4 W	48 V AC: 50/60 Hz, pick-up power 3.9 VA, holding power 2.7 VA	110/120 V AC: 50/60 Hz, pick-up power 4.4 VA, holding power 3.3 VA
Permissible voltage fluctuations	+/-10%						
Immunity to surge	–		4	–			2.5
Duty cycle	100%						
Degree of protection	IP65						
Insulation material class	H						
Pollution degree	–		2	–			2

Materials - Solenoid coils width 22 mm for armature tube 8 mm, with electrical connection form B, to industry standard

Material solenoid coil	Copper, Steel, Thermoplastic
Material housing	PA, Steel
Material winding	Copper
Note on materials	RoHS compliant
LABS (PWIS) conformity	VDMA24364-B1/B2-L

Operating and environmental conditions - Solenoid coils width 22 mm for armature tube 8 mm, with electrical connection form B, according to industry standard

Nominal operating voltage	24 V DC	24 V AC/50-60 Hz	230 V AC/240 V AC/50-60 Hz	12 V DC	48 V DC	48 V AC/50-60 Hz	120 V AC/60 Hz and 110V AC/50-60 Hz
Ambient temperature	-20 ... 60°C						
Media temperature	-20 ... 50°C						
Restrictions for environmental and media temperature	-20 - 50°C						
Corrosion resistance class CRC [1]	2 - Moderate corrosion stress						
CE mark (see declaration of conformity) [2]	–		To EU Low Voltage Directive	–			To EU Low Voltage Directive
UKCA marking (see declaration of conformity)[3]	–		To UK regulations for electrical equipment	–			To UK regulations for electrical equipment
Approval	c UL us - Recognised (Oil)						
Maritime classification [4]	See certificate						
Certificate issuing authority	DNVGL-TAA000011J UL MH18122						

1) More information at www.festo.com/x/topic/kbk
2) More information www.festo.com/catalogue/... Support/Downloads.
3) More information www.festo.com/catalogue/... Support/Downloads.
4) More information www.festo.com/catalogue/... Support/Downloads.

chanhvinh.com

Datasheet

General technical data - Solenoid coils width 22 mm for Armature tube 8 mm, with electrical connection form C, according to EN 175301-803



Electrical connection 1, connection type	Plug
Electrical connection 1, connector system	Plug pattern type C to EN 175301-803
Electrical connection 1, number of connections/cores	3
Electrical connection 1, type of mounting	Central screw M2.5
Type of actuation	Electrical
Conforms to standard	IEC 61010-1
Mounting position	Any
Type of mounting	Via knurled nut

Electrical data - Solenoid coils width 22 mm for Armature tube 8 mm, with electrical connection form C, according to EN 175301-803

Nominal operating voltage	24 V DC	24 V AC/50-60 Hz	230 V AC/240 V AC/50-60 Hz	12 V DC	48 V DC	48 V AC/50-60 Hz	120 V AC/60 Hz and 110V AC/50-60 Hz
Characteristic coil data	24 V DC: 3.3 W	24 V AC: 50/60 Hz, pick-up power 3.9 VA, holding power 2.6 VA	230/240 V AC: 50/60 Hz, pick-up power 5.8 VA, holding power 4.6 VA	12 V DC: 3.4 W	48 V DC: 3.4 W	48 V AC: 50/60 Hz, pick-up power 3.9 VA, holding power 2.7 VA	110/120 V AC: 50/60 Hz, pick-up power 4.4 VA, holding power 3.3 VA
Permissible voltage fluctuations	+/-10%						
Immunity to surge	–		4	–			2.5
Duty cycle	100%						
Degree of protection	IP65						
Insulation material class	H						
Pollution degree	–		2	–			2

Material - Solenoid coils width 22 mm for Armature tube 8 mm, with electrical connection form C, according to EN 175301-803

Material solenoid coil	Copper, Steel, Thermoplastic
Material housing	PA, Steel
Material winding	Copper
Note on materials	RoHS compliant
LABS (PWIS) conformity	VDMA24364-B1/B2-L

chanhvinh.com

Datasheet

Operating and environmental conditions - Solenoid coils width 22 mm for Armature tube 8 mm, with electrical connection form C, according to EN 175301-803

Nominal operating voltage	24 V DC	24 V AC/50-60 Hz	230 V AC/240 V AC/50-60 Hz	12 V DC	48 V DC	48 V AC/50-60 Hz	120 V AC/60 Hz and 110V AC/50-60 Hz
Ambient temperature	-20 ... 60°C						
Media temperature	-20 ... 50°C						
Restrictions for environmental and media temperature	-20 - 50°C						
Corrosion resistance class CRC [1]	2 - Moderate corrosion stress						
CE mark (see declaration of conformity) [2]	–		To EU Low Voltage Directive	–			To EU Low Voltage Directive
UKCA marking (see declaration of conformity)[3]	–		To UK regulations for electrical equipment	–			To UK regulations for electrical equipment
Approval	c UL us - Recognised (Oil)						
Certificate issuing authority	UL MH18122						

1) More information www.festo.com/x/topic/kbk
2) More information www.festo.com/catalogue/... Support/Downloads.
3) More information www.festo.com/catalogue/... Support/Downloads.

General technical data - Solenoid coils width 22 mm for armature tube 8 mm, with electrical connection form C, to industry standard

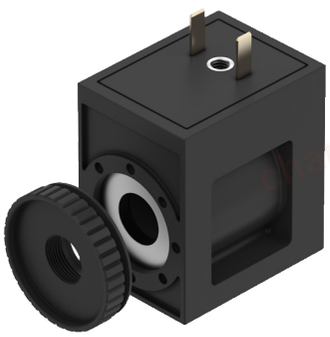

Electrical connection 1, connection type	Plug
Electrical connection 1, connector system	Plug pattern type C to industry standard, 9.4 mm
Electrical connection 1, number of connections/cores	2
Electrical connection 1, type of mounting	Central screw M3
Type of actuation	Electrical
Conforms to standard	IEC 61010-1
Mounting position	Any
Type of mounting	Via knurled nut

Electrical data - Solenoid coils width 22 mm for armature tube 8 mm, with electrical connection form C, to industry standard

Characteristic coil data	24 V DC: 3.3 W
Permissible voltage fluctuations	+/-10%
Duty cycle	100%
Degree of protection	IP65
Insulation material class	H
Insulation material class of enamelled wire	H
Pollution degree	–

chanhvinh.com

Datasheet

Materials - Solenoid coils width 22 mm for armature tube 8 mm, with electrical connection form C, to industry standard	
Material solenoid coil	Copper, Steel, Thermoplastic
Material housing	PA, Steel
Material winding	Copper
Note on materials	RoHS compliant
LABS (PWIS) conformity	VDMA24364-B1/B2-L

Operating and environmental conditions - Solenoid coils width 22 mm for armature tube 8 mm, with electrical connection form C, according to industry standard	
Ambient temperature	-20 ... 60°C
Media temperature	-20 ... 60°C
Restrictions for environmental and media temperature	-20 - 50°C, with block mounting
Corrosion resistance class CRC [1]	2 - Moderate corrosion stress
CE mark (see declaration of conformity) [2]	–
UKCA marking (see declaration of conformity)[3]	–
Approval	c UL us - Recognised (Oil)
Certificate issuing authority	UL MH18122
Impact energy value	IK06

1) More information at www.festo.com/x/topic/kbk
2) More information www.festo.com/catalogue/... Support/Downloads.
3) More information www.festo.com/catalogue/... Support/Downloads.

General technical data - Solenoid coils width 22 mm for Armature tube 8 mm, with electrical connection Cable with open end

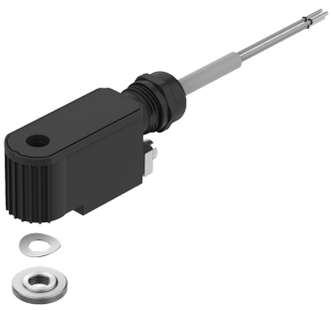

Electrical connection	3-core, Cable with open end
Type of mounting	Via knurled nut
Mounting position	Any
Switching position indicator	No

Electrical data - Solenoid coils width 22 mm for Armature tube 8 mm, with electrical connection Cable with open end				
Characteristic coil data	110 V AC: 50/60 Hz, power 4.18 VA	230 V AC: 50/60 Hz, power 5.0 VA	24 V AC: 50/60 Hz, power 3.85 VA	24 V DC: 4.36 W
Nominal cross section conductor	0.75 mm²			
Permissible voltage fluctuations	+/-10%			
Permissible frequency fluctuations	+/-5%			–
Min. pick-up time	10			
Duty cycle	100%			
Degree of protection	IP65			

chanhvinh.com

Datasheet

ATEX - Solenoid coils width 22 mm for Armature tube 8 mm, with electrical connection Cable with open end	
ATEX category gas	II 2G
Explosion ignition protection type for gas	Ex mb IIC T5 Gb
ATEX category dust	II 2D
Explosion ignition protection type for dust	Ex mb IIIC T95°C Db
Explosion ambient temperature	-30°C <= Ta <= +40°C
Explosion protection certification outside the EU	EPL Db (BR) EPL Db (CN) EPL Db (GB) EPL Db (IEC-EX) EPL Gb (BR) EPL Gb (CN) EPL Gb (GB) EPL Gb (IECEx)
Certificate issuing authority	2,020,322,307,001,099 CML22UKEX5255X DNV17.0013X GYJ23.1154X IBExU 16 ATEX1146X IECEx IBE16.0024X

Materials - Solenoid coils width 22 mm for Armature tube 8 mm, with electrical connection Cable with open end	
Material solenoid coil	Aluminium, Epoxy resin, Copper, Steel
Material winding	Copper
Note on materials	RoHS compliant
LABS (PWIS) conformity	VDMA24364-C1-L

Operating and environmental conditions - Solenoid coils width 22 mm for Armature tube 8 mm, with electrical connection Cable with open end	
Ambient temperature	-30 ... 40°C
Corrosion resistance class CRC [1]	0 - No corrosion stress
CE mark (see declaration of conformity) [2]	To EU Explosion Protection Directive (ATEX) In accordance with EU RoHS Directive
UKCA marking (see declaration of conformity)	To UK EX instructions To UK RoHS instructions

1) More information www.festo.com/x/topic/kbk

2) More information www.festo.com/catalogue/... Support/Downloads.

chanhvinh.com

Datasheet

General technical data - Solenoid coils width 22 mm for Armature tube 8 mm, with electrical connection plug M8 4-pin

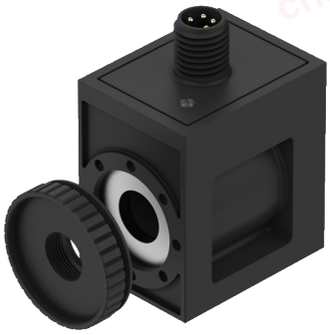

Electrical connection 1, connection type	Plug
Electrical connection 1, connector system	M8x1, A-coded, to EN 61076-2-104
Electrical connection 1, number of connections/cores	4
Electrical connection 1, type of mounting	Screw-type lock
Type of actuation	Electrical
Conforms to standard	IEC 61010-1; ISO 20401
Signal status display	LED
Mounting position	Any
Type of mounting	Via knurled nut

Electrical data - Solenoid coils width 22 mm for Armature tube 8 mm, with electrical connection plug M8 4-pin

Characteristic coil data	24 V DC: 3.4 W	24VDC:NS1,2:HS3.3
Permissible voltage fluctuations	+/-10%	
Nominal pick-up current per solenoid coil	–	138 mA to 70 ms
Nominal current with current reduction	–	50 mA after 70 ms
Duty cycle	100%	
Degree of protection	IP65	
Insulation material class	H	
Insulation material class of enamelled wire	H	

Materials - Solenoid coils width 22 mm for Armature tube 8 mm, with electrical connection plug M8 4-pin

Material housing	PA; Steel
Material solenoid coil	Copper; Steel; Thermoplastic
Material winding	Copper
Note on materials	RoHS compliant
LABS (PWIS) conformity	VDMA24364-B1/B2-L

chanhvinh.com

Datasheet

Operating and environmental conditions - Solenoid coils width 22 mm for Armature tube 8 mm, with electrical connection plug M8 4-pin		
Circuitry	None	Holding current reduction, analogue, with integrated protective circuit
Ambient temperature	-20 ... 60°C	
Media temperature	-20 ... 60°C	
Restrictions for environmental and media temperature	-20 - 50°C, with block mounting	–
Corrosion resistance class CRC [1]	2 - Moderate corrosion stress	
Approval	c UL us - Recognised (Oil)	
Certificate issuing authority	UL MH18122	
Impact energy value	IK06	

1) More information www.festo.com/x/topic/kbk

General technical data - Solenoid coils width 22 mm for Armature tube 8 mm, with electrical connection plug M12 2-pin



Electrical connection 1, connection type	Plug
Electrical connection 1, connector system	M12x1, A-coded to EN 61076-2-101
Electrical connection 1, number of connections/cores	2
Electrical connection 1, type of mounting	Screw-type lock
Type of actuation	Electrical
Conforms to standard	IEC 61010-1; ISO 20401
Signal status display	LED
Mounting position	Any
Type of mounting	Via knurled nut

Electrical data - Solenoid coils width 22 mm for Armature tube 8 mm, with electrical connection plug M12 2-pin		
Characteristic coil data	24 V DC: 3.4 W	24VDC:NS1,2:HS3.3
Permissible voltage fluctuations	+/-10%	
Nominal pick-up current per solenoid coil	–	138 mA to 70 ms
Nominal current with current reduction	–	50 mA after 70 ms
Duty cycle	100%	
Degree of protection	IP65	
Insulation material class	H	
Insulation material class of enamelled wire	H	

chanhvinh.com

Datasheet

Material - Solenoid coils width 22 mm for Armature tube 8 mm, with electrical connection plug M12 2-pole	
Material housing	PA; Steel
Material solenoid coil	Copper; Steel; Thermoplastic
Material winding	Copper
Note on materials	RoHS compliant
LABS (PWIS) conformity	VDMA24364-B1/B2-L

Operating and environmental conditions - Solenoid coils width 22 mm for Armature tube 8 mm, with electrical connection plug M12 2-pin		
Circuitry	None	Holding current reduction, analogue, with integrated protective circuit
Ambient temperature	-20 ... 60°C	
Media temperature	-20 ... 60°C	
Restrictions for environmental and media temperature	-20 - 50°C, with block mounting	–
Corrosion resistance class CRC [1]	2 - Moderate corrosion stress	
Approval	c UL us - Recognised (Oil)	
Certificate issuing authority	UL MH18122	
Impact energy value	IK06	

1) More information www.festo.com/x/topic/kbk

General technical data - Solenoid coils width 22 mm for Armature tube 8 mm, with electrical connection plug M12 4-pin



Electrical connection 1, connection type	Plug
Electrical connection 1, connector system	M12x1, A-coded to EN 61076-2-101
Electrical connection 1, number of connections/cores	4
Electrical connection 1, type of mounting	Screw-type lock
Type of actuation	Electrical
Conforms to standard	DESINA; IEC 61010-1
Signal status display	LED
Mounting position	Any
Type of mounting	Via knurled nut

chanhvinh.com

Datasheet

Electrical data - Solenoid coils width 22 mm for Armature tube 8 mm, with electrical connection plug M12 4-pin		
Characteristic coil data	24 V DC: 3.4 W	24VDC:NS1,2:HS3.3
Permissible voltage fluctuations	+/-10%	
Nominal pick-up current per solenoid coil	–	138 mA to 70 ms
Nominal current with current reduction	–	50 mA after 70 ms
Duty cycle	100%	
Degree of protection	IP65	
Insulation material class	H	
Insulation material class of enamelled wire	H	

Materials - Solenoid coils width 22 mm for Armature tube 8 mm, with electrical connection plug M12 4-pin	
Material housing	PA; Steel
Material solenoid coil	Copper; Steel; Thermoplastic
Material winding	Copper
Note on materials	RoHS compliant
LABS (PWIS) conformity	VDMA24364-B1/B2-L

Operating and environmental conditions - Solenoid coils width 22 mm for Armature tube 8 mm, with electrical connection plug M12 4-pin		
Circuitry	None	Holding current reduction, analogue, with integrated protective circuit
Ambient temperature	-20 ... 60°C	
Media temperature	-20 ... 60°C	
Restrictions for environmental and media temperature	-20 - 50°C, with block mounting	–
Corrosion resistance class CRC [1)]	2 - Moderate corrosion stress	
Approval	c UL us - Recognised (Oil)	
Certificate issuing authority	UL MH18122	
Impact energy value	IK06	

1) More information www.festo.com/x/topic/kbk

chanhvinh.com

Datasheet

General technical data - Solenoid coils width 22 mm for Armature tube 8 mm, with electrical connection plug M8 3-pin

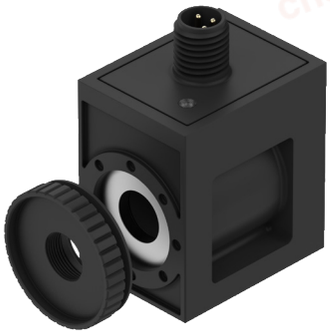

Electrical connection 1, connection type	Plug
Electrical connection 1, connector system	M8x1, A-coded, to EN 61076-2-104
Electrical connection 1, number of connections/cores	3
Electrical connection 1, type of mounting	Screw-type lock
Type of actuation	Electrical
Conforms to standard	IEC 61010-1; ISO 20401
Signal status display	LED
Mounting position	Any
Type of mounting	Via knurled nut

Electrical data - Solenoid coils width 22 mm for Armature tube 8 mm, with electrical connection plug M8 3-pin

Characteristic coil data	24 V DC: 3.4 W	24VDC:NS1,2:HS3.3
Permissible voltage fluctuations	+/-10%	
Nominal pick-up current per solenoid coil	–	138 mA to 70 ms
Nominal current with current reduction	–	50 mA after 70 ms
Duty cycle	100%	
Degree of protection	IP65	
Insulation material class	H	
Insulation material class of enamelled wire	H	

Material - Solenoid coils width 22 mm for Armature tube 8 mm, with electrical connection plug M8 3-pin

Material housing	PA; Steel
Material solenoid coil	Copper; Steel; Thermoplastic
Material winding	Copper
Note on materials	RoHS compliant
LABS (PWIS) conformity	VDMA24364-B1/B2-L

chanhvinh.com

Datasheet

Operating and environmental conditions - Solenoid coils width 22 mm for Armature tube 8 mm, with electrical connection plug M8 3-pin		
Circuitry	None	Holding current reduction, analogue, with integrated protective circuit
Ambient temperature	-20 ... 60°C	
Media temperature	-20 ... 60°C	
Restrictions for environmental and media temperature	-20 - 50°C, with block mounting	–
Corrosion resistance class CRC [1]	2 - Moderate corrosion stress	
Approval	c UL us - Recognised (Oil)	
Certificate issuing authority	UL MH18122	
Impact energy value	IK06	

1) More information www.festo.com/x/topic/kbk

chanhvinh.com

Dimensions

Dimensions – Solenoid coils width 30 mm for Armature tube 8 mm, with electrical connection form A

Download CAD data www.festo.com

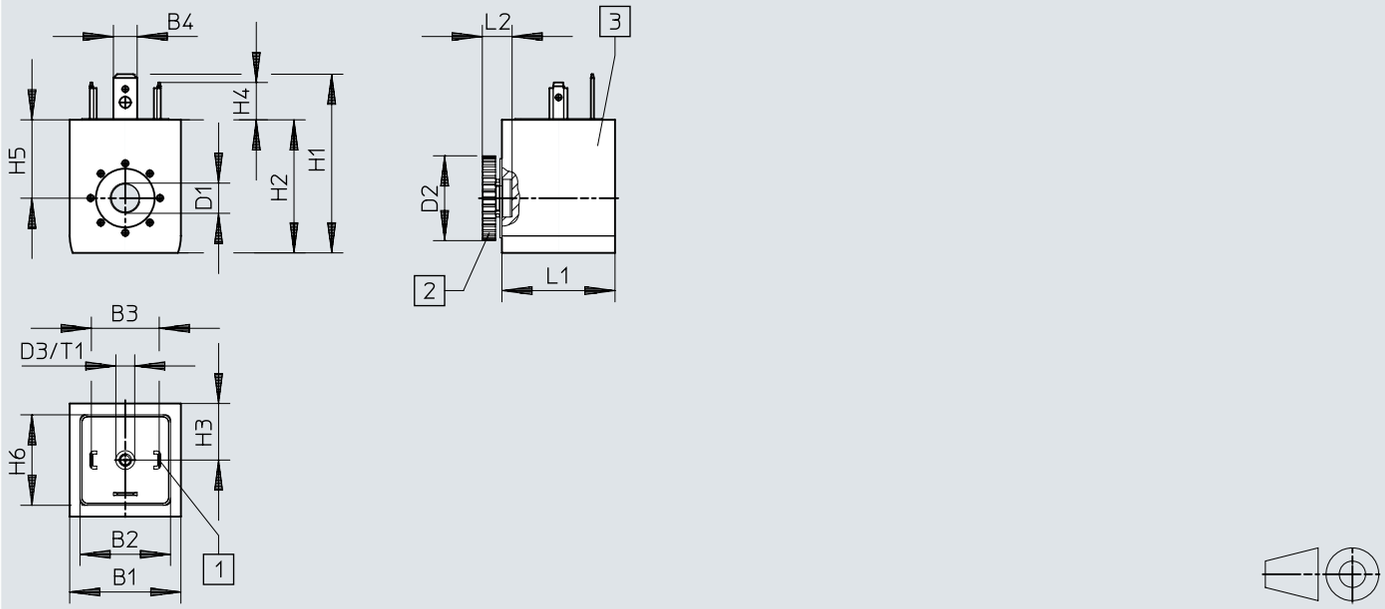

[1] Plug pattern according to EN 175301-803, type A
[2] Knurled nut (seal set for solenoid coil)
[3] Solenoid coil (can be rotated in increments of 45° on the armature, can be pushed on in any direction)

	B1	B2	B3	B4	D1	D2	D3	H1	H2	H3	H4	H5	H6	L1	L2	T1
VACF-A-A1-...	29,5	24	18	6,3	8,2	22,5	M3	47,4	35,3	15	9,9	20,8	24	30	7,9	5

chanhvinh.com

Dimensions

Dimensions – Solenoid coils width 22 mm for armature tube 8 mm, with electrical connection form B, according to EN 175301-803

Download CAD data www.festo.com

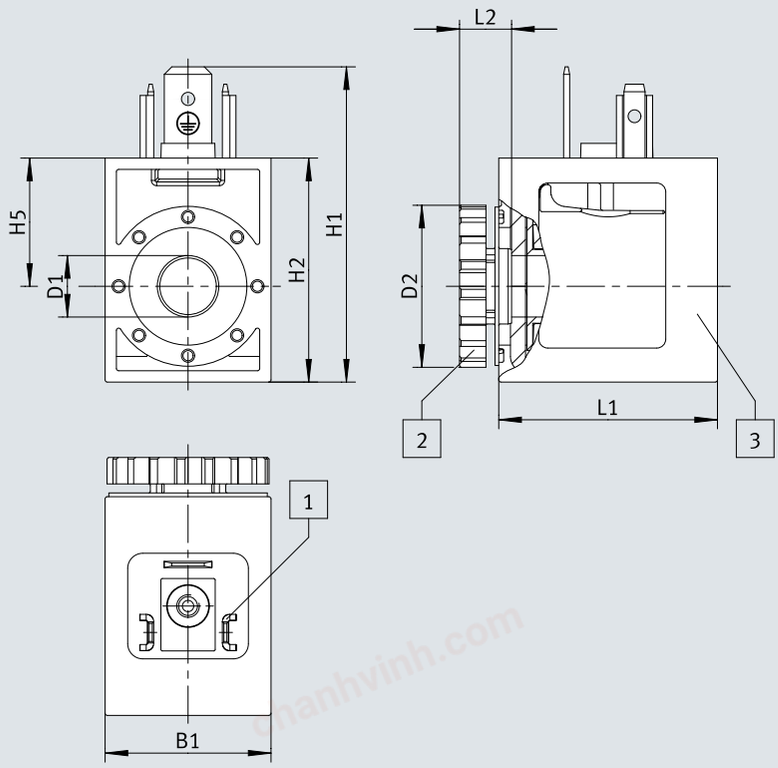

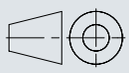

[1] Plug pattern to EN 175301-803, type B
[2] Knurled nut
[3] Solenoid coil

	B1	D1 ø	D2 ø	H1	H2	H5	L1	L2
VACF-B-B1-1	22	8,2	21,5	41,8	29,7	17	29	6,9

chanhvinh.com

Dimensions

Dimensions – Solenoid coils width 22 mm for armature tube 8 mm, with electrical connection form B, according to industry standard

Download CAD data www.festo.com

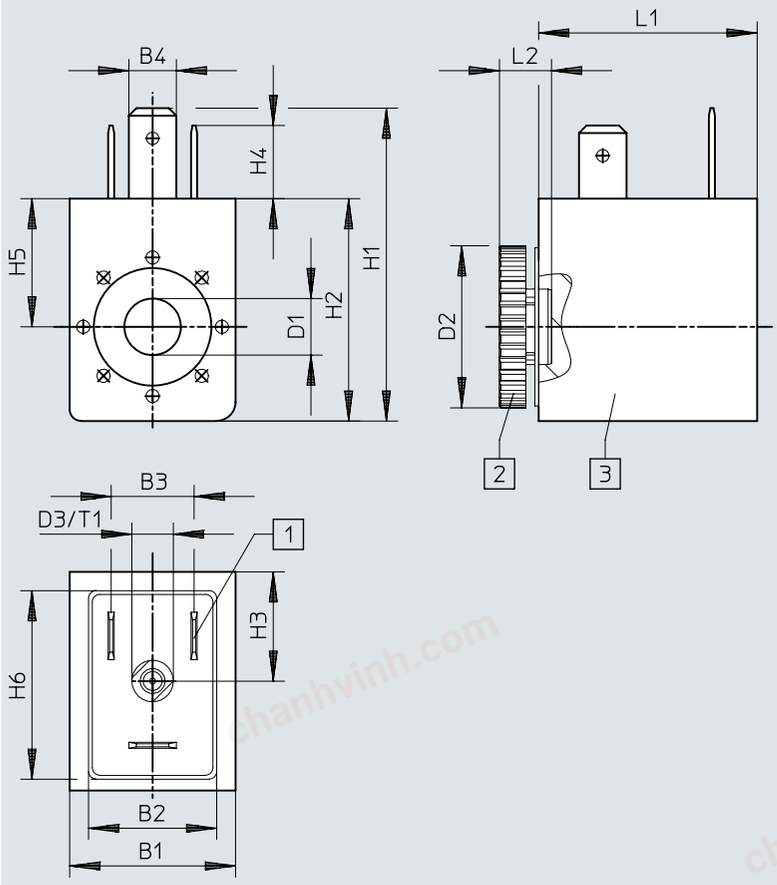

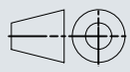

[1] Plug pattern to industry standard, type B
[2] Knurled nut (seal set for solenoid coil)
[3] Solenoid coil (can be rotated in increments of 45° on the armature, can be pushed on in any direction)

	B1	B2	B3	B4	D1 ø	D2 ø	D3	H1	H2	H3	H4	H5	H6	L1	L2	T1
VACF-B-B2-...	22	17	11	6,3	8,2	21,5	M3	41,7	29,7	14,5	9,7	17	25	29	6,9	5

chanhvinh.com

Dimensions

Dimensions – Solenoid coils width 22 mm for Armature tube 8 mm, with electrical connection form C, according to EN 175301-803

Download CAD data www.festo.com

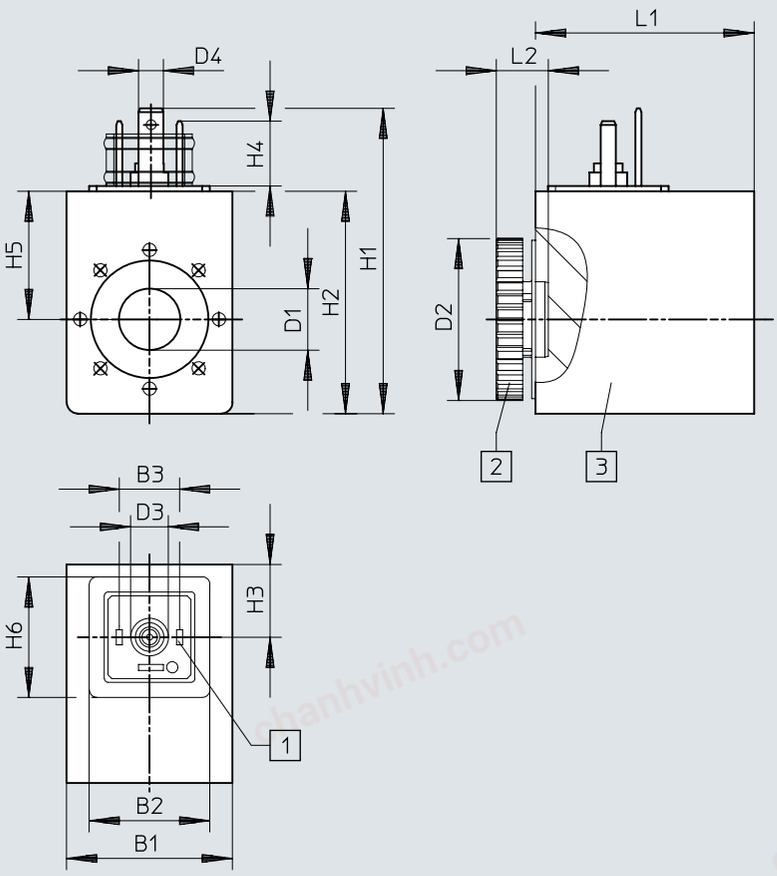

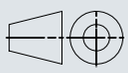

[1] Plug pattern to EN 175301-803, type C
[2] Knurled nut (seal set for solenoid coil)
[3] Solenoid coil (can be rotated in increments of 45° on the armature, can be pushed on in any direction)

	B1	B2	B3	D1	D2	D3	D4	H1	H2	H3	H4	H5	H6	L1	L2
VACF-B-C1-...	22	16	8	8,2	21,5	27	3,3	40,5	29,5	9,7	8,6	17	16	29	6,9

chanhvinh.com

Dimensions

Dimensions – Solenoid coils width 22 mm for Armature tube 8 mm, with electrical connection form C according to industry standard

Download CAD data www.festo.com

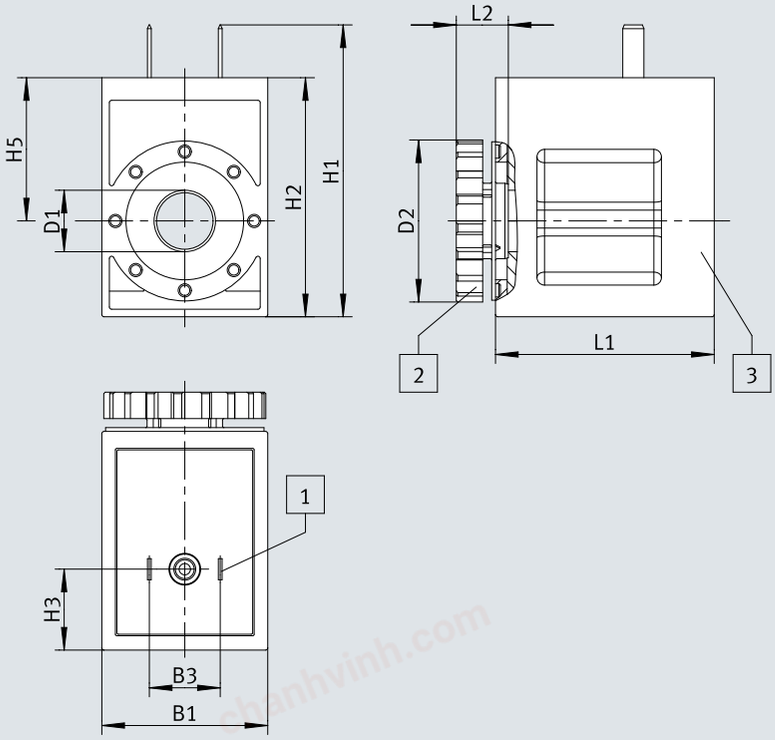

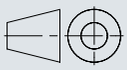

[1] Plug pattern to EN 175301-803, type C
[2] Knurled nut (seal set for solenoid coil)
[3] Solenoid coil (can be rotated in increments of 45° on the armature, can be pushed on in any direction)

	B1	B3	D1 ⌀	D2 ⌀	H1	H2	H3	H5	L1	L2
VACF-B-E1-1	22	9,4	8,2	21,5	38,7	31,7	10,7	19	29	6,9

chanhvinh.com

Dimensions

Dimensions – Solenoid coils width 22 mm for Armature tube 8 mm, with electrical connection Cable with open end

Download CAD data www.festo.com

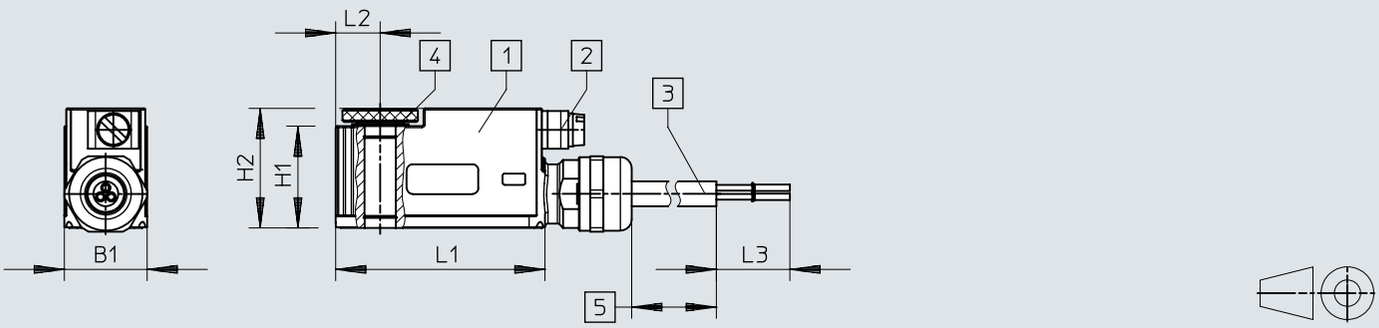

[1] Solenoid coil
[2] Equipotential bonding connection terminal
[3] Heat-resistant rubber tubing
[4] Knurled nut
[5] Length depending on order

	B1	H1	H2	L1	L2	L3
VACF-B-K1-...	22	27	31,7	55,5	11,8	50

chanhvinh.com

Dimensions

Dimensions – Solenoid coils width 22 mm for Armature tube 8 mm, with electrical connection plug M8 4-pin

Download CAD data www.festo.com

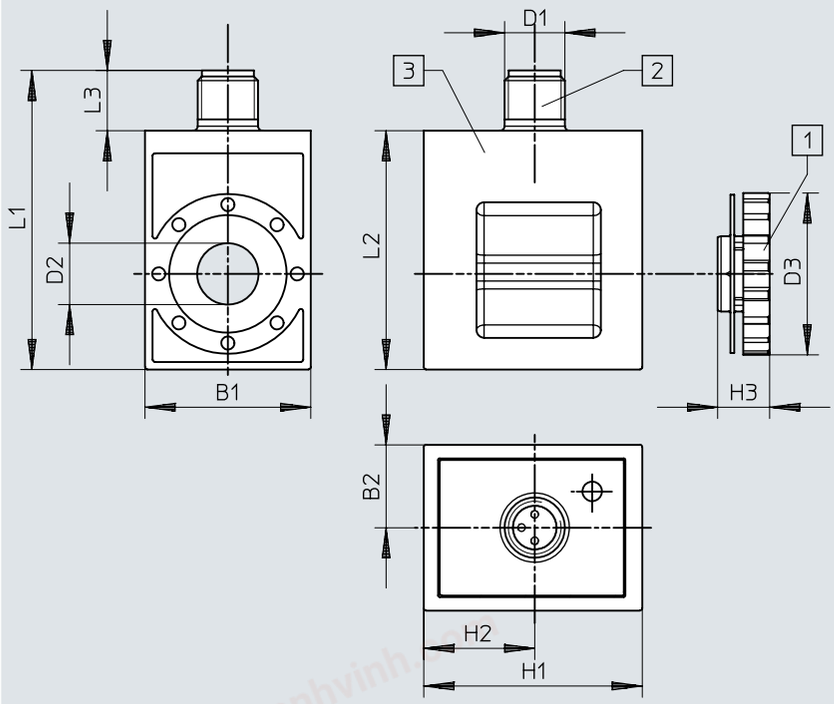

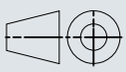

[1] Knurled nut
[2] Plug, M8x1 A-coded to EN 61076-2-104
[3] Solenoid coil

	B1	B2	D1	D2 ⌀	D3 ⌀	H1	H2	H3	L1	L2	L3
VACF-B-R1-...	22	11	M8	8,2	21,5	29	14,7	6,9	39,7	31,7	6,5
VACF-B-R8-...											

chanhvinh.com

Dimensions

Dimensions – Solenoid coils width 22 mm for Armature tube 8 mm, with electrical connection plug M12 2-pin

Download CAD data www.festo.com

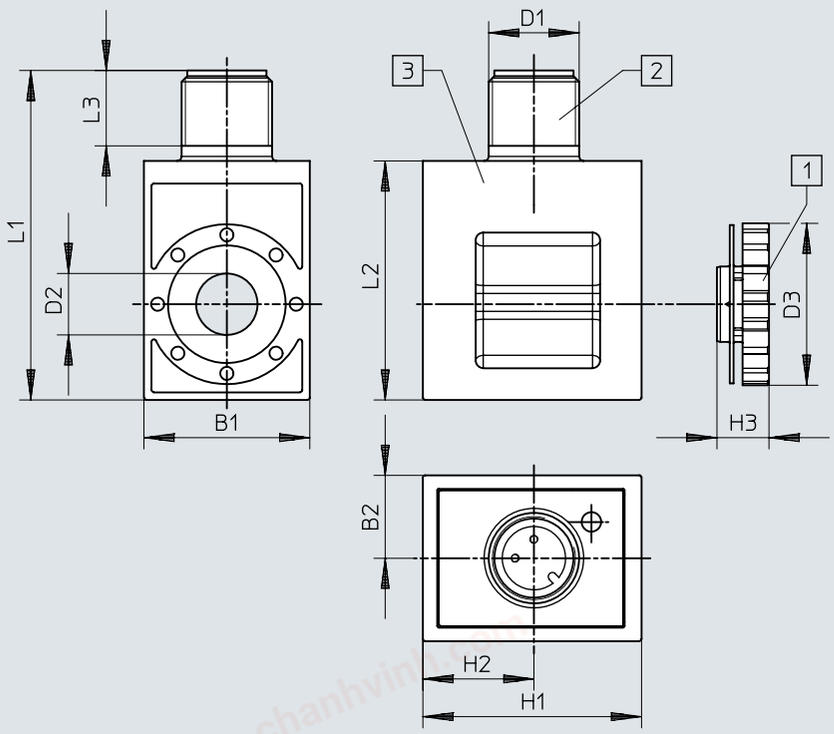

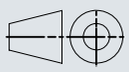

[1] Knurled nut
[2] Plug M12x1
[3] Solenoid coil

	B1	B2	D1	D2 ⌀	D3 ⌀	H1	H2	H3	L1	L2	L3
VACF-B-R3-...	22	11	M12	8,2	21,5	29	14,7	6,9	43,7	31,7	10
VACF-B-R4-...											

chanhvinh.com

Dimensions

Dimensions – Solenoid coils width 22 mm for Armature tube 8 mm, with electrical connection plug M12 4-pin

Download CAD data www.festo.com

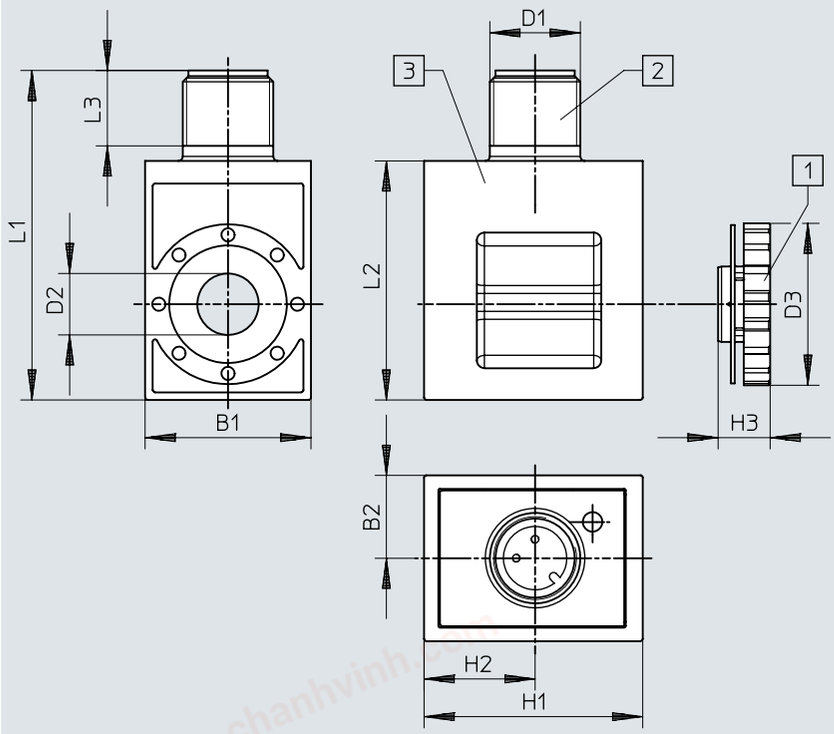

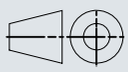

[1] Knurled nut
[2] Plug M12x1
[3] Solenoid coil

	B1	B2	D1	D2 ⌀	D3 ⌀	H1	H2	H3	L1	L2	L3
VACF-B-R4-...	22	11	M12	8,2	21,5	29	14,7	6,9	43,7	31,7	10

chanhvinh.com

Dimensions

Dimensions – Solenoid coils width 22 mm for Armature tube 8 mm, with electrical connection plug M8 3-pin

Download CAD data www.festo.com

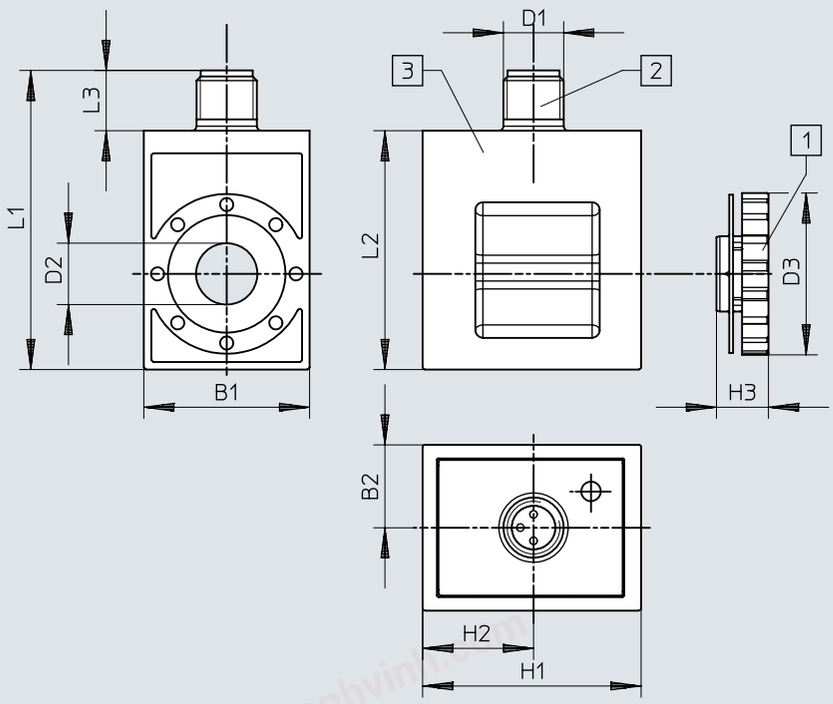

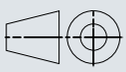

[1] Knurled nut
[2] Plug, M8x1 A-coded to EN 61076-2-104
[3] Solenoid coil

	B1	B2	D1	D2 ⌀	D3 ⌀	H1	H2	H3	L1	L2	L3
VACF-B-R8-...	22	11	M8	8,2	21,5	29	14,7	6,9	39,7	31,7	6,5

chanhvinh.com

Ordering data

Ordering data - Solenoid coils width 22 mm for Armature tube 8 mm, with electrical connection plug

Circuitry	Nominal operating voltage	Power consumption	Electrical connection	Conforms to standard	Product weight	Part no.	Type
None	24 V DC	None	Connection pattern type B, to EN 175 301	IEC 61010-1	49 g	**8220305**	**VACF-B-B1-1**
			Connection pattern type B, industry standard		56.5 g	**8030802**	**VACF-B-B2-1**
			Plug pattern type C, to EN 175301-803		54.1 g	**8030811**	**VACF-B-C1-1**
			Plug pattern type C, industry standard		48.5 g	**8153947**	**VACF-B-E1-1**
			Individual connector M8, 4-pin	IEC 61010-1, ISO 20401	49 g	**8150875**	**VACF-B-R1-1L**
			Single plug M12 A-coded, according to EN 61076-2-101		49.5 g	**8150876**	**VACF-B-R3-1L**
			Single plug M12 A-coded, pin assignment according to DESINA	DESINA, IEC 61010-1		**8150877**	**VACF-B-R4-1L**
			Individual connector M8, 3-pin	IEC 61010-1, ISO 20401	48.5 g	**8150874**	**VACF-B-R8-1L**
		4.5 W	Connection pattern type B, to EN 175 301	IEC 61010-1	47.5 g	**8235213**	**VACF-B-45-B1-1**
	24 V AC/50-60 Hz	None	Connection pattern type B, industry standard		55.8 g	**8030804**	**VACF-B-B2-1A**
			Plug pattern type C, to EN 175301-803		54 g	**8030813**	**VACF-B-C1-1A**
	230 V AC/240 V AC/50-60 Hz		Connection pattern type B, industry standard		53 g	**8030808**	**VACF-B-B2-3W**
			Plug pattern type C, to EN 175301-803		51.1 g	**8030817**	**VACF-B-C1-3W**
	12 V DC		Connection pattern type B, industry standard		55.6 g	**8030801**	**VACF-B-B2-5**
			Plug pattern type C, to EN 175301-803		52.4 g	**8030810**	**VACF-B-C1-5**
	48 V DC		Connection pattern type B, industry standard		55.9 g	**8030803**	**VACF-B-B2-7**
			Plug pattern type C, to EN 175301-803		54.3 g	**8030812**	**VACF-B-C1-7**
	48 V AC/50-60 Hz		Connection pattern type B, industry standard		55.3 g	**8030805**	**VACF-B-B2-7A**
			Plug pattern type C, to EN 175301-803		53.5 g	**8030814**	**VACF-B-C1-7A**
	120 V AC/60 Hz and 110V AC/50-60 Hz		Connection pattern type B, industry standard		52.3 g	**8030806**	**VACF-B-B2-16B**
			Plug pattern type C, to EN 175301-803		51 g	**8030815**	**VACF-B-C1-16B**

chanhvinh.com

Ordering data

Ordering data - Solenoid coils width 22 mm for Armature tube 8 mm, with electrical connection plug

Circuitry	Nominal operating voltage	Power consumption	Electrical connection	Conforms to standard	Product weight	Part no.	Type
Holding current reduction, analogue, with integrated protective circuit	24 V DC	None	Individual connector M8, 4-pin	IEC 61010-1, ISO 20401	49 g	**8150879**	**VACF-B-R1-1RAL**
			Single plug M12 A-coded, according to EN 61076-2-101		49.5 g	**8150873**	**VACF-B-R3-1RAL**
			Single plug M12 A-coded, pin assignment according to DESINA	DESINA, IEC 61010-1		**8150880**	**VACF-B-R4-1RAL**
			Individual connector M8, 3-pin	IEC 61010-1, ISO 20401	49 g	**8150878**	**VACF-B-R8-1RAL**

Ordering data - Solenoid coils width 22 mm for Armature tube 8 mm, with electrical cable connection

Circuitry	Nominal operating voltage	Electrical connection	Cable length	Product weight	Part no.	Type
None	24 V DC	Cable	1 m	170 g	**8059804**	**VACF-B-K1-1-1-EX4-M**
			5 m		**8059805**	**VACF-B-K1-1-5-EX4-M**
			10 m		**8059806**	**VACF-B-K1-1-10-EX4-M**
			20 m		**8059807**	**VACF-B-K1-1-20-EX4-M**
	24 V AC/50-60 Hz		1 m		**8059808**	**VACF-B-K1-1A-1-EX4-M**
	230 V AC/50-60 Hz				**8059809**	**VACF-B-K1-3A-1-EX4-M**
			5 m		**8059810**	**VACF-B-K1-3A-5-EX4-M**
	120 V AC/60 Hz and 110V AC/50-60 Hz		1 m		**8059811**	**VACF-B-K1-16B-1-EX4-M**
			5 m		**8059812**	**VACF-B-K1-16B-5-EX4-M**

Ordering data - Solenoid coils width 30 mm for Armature tube 8 mm, with electrical connection plug

Circuitry	Nominal operating voltage	Electrical connection	Product weight	Part no.	Type
None	24 V DC	Plug pattern type A, to EN 175301-803	82.6 g	**8030822**	**VACF-A-A1-1**
	24 V AC/50-60 Hz		83.4 g	**8030824**	**VACF-A-A1-1A**
	230 V AC/240 V AC/50-60 Hz		79.2 g	**8030828**	**VACF-A-A1-3W**
	12 V DC		83.1 g	**8030821**	**VACF-A-A1-5**
	48 V DC		82.7 g	**8030823**	**VACF-A-A1-7**
	48 V AC/50-60 Hz		82.3 g	**8030825**	**VACF-A-A1-7A**
	120 V AC/60 Hz and 110V AC/50-60 Hz		82.4 g	**8030826**	**VACF-A-A1-16B**

chanhvinh.com

Accessories

Seal set

	Size	Part no.	Type
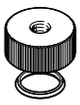	Solenoid coil size 30/8	**8034611**	**VAMC-B10-A-B-S8**
	Solenoid coil, size 22/8	**8034609**	**VAMC-B10-B-B-S8**