chanhvinh.com

Proximity switch SIEH

FESTO

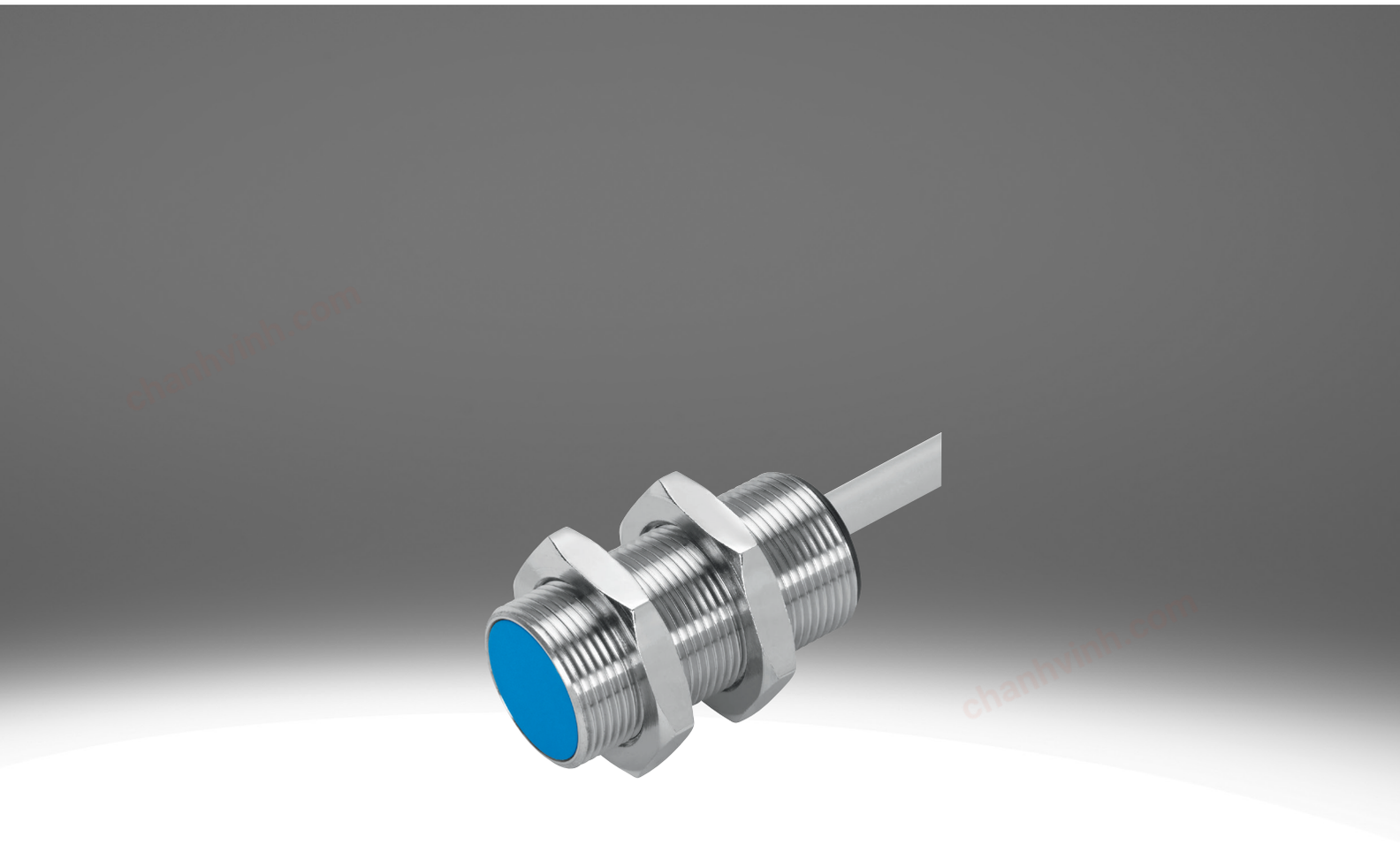

chanhvinh.com

chanhvinh.com

Type code

001	Series	
SIEH	Proximity sensor, inductive, with increased switching distance	

002	Design	
3	Round, diameter 3 mm	
M12	Round, M12x1	
M18	Round, M18x1	

003	Mounting type	
B	Flush	

004	Switching input/output	
N	NPN	
P	PNP	

005	Switching element function	
O	N/C contact	
S	N/O contact	

006	Electrical connection	
K	Open end	
S	Plug	

007	Display	
L	Switching status	

008	Housing material	
	Standard	
CR	Stainless steel housing	

chanhvinh.com

Datasheet

General technical data

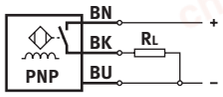

Size	3 mm	M12	M18
Conforms to standard	EN 60947-5-2		
Approval	RCM trademark, c UL us listed (OL)	C-Tick, c UL us listed (OL)	RCM trademark, c UL us listed (OL)
CE mark (see declaration of conformity) [1]	To EU EMC Directive		
Note on materials	–		RoHS-compliant

1) For information about the area of use, see the declaration of conformity at: www.festo.com/catalogue/sieh → Support/Downloads.
If the devices are subject to usage restrictions in residential, commercial or light-industrial environments, further measures for the reduction of the emitted interference may be necessary.

Input signal, measuring element

Ambient temperature	-25 ... 70°C

Output, general

Size	3 mm	M12	M18
Repetition accuracy	0.02 mm	–	0.4 mm
Repetition accuracy with constant conditions	–	0.2 mm	–

Switching output

Size	3 mm	M12	M18
Switching output	NPN, PNP		
Switching element function	N/O contact	N/C contact, N/O contact	
Rated operating distance	1 mm	4 mm	8 mm
Assured operating distance	0.81 mm	3.24 mm	6.48 mm
Reduction factors	Aluminium = 0.5, Stainless steel St 18/8 = 0.8, Copper = 0.45, Brass = 0.6, Steel St 37 = 1.0	Aluminium = 0.4, Stainless steel St 18/8 = 0.8, Copper = 0.4, Brass = 0.5, Steel St 37 = 1.0	Aluminium = 0.35, Stainless steel St 18/8 = 0.7, Copper = 0.3, Brass = 0.4, Steel St 37 = 1.0
Hysteresis	≤0.12 mm	≤0.36 mm	≤0.88 mm
Switch-on time	0.02 ms	–	
Max. switching frequency DC	3,000 Hz	–	
Max. output current	100 mA	200 mA	
Voltage drop	≤2 V		

Output, additional data

Size	3 mm	M12	M18
Short circuit current rating	Pulsed		
Inductive protective circuit	Integrated, Output current < 100 mA, And switching frequency < 10 Hz	Integrated	–

Electronics

Size	3 mm	M12	M18
Operational voltage range DC	10 ... 30 V		
Residual ripple	20%	± 10%	+/- 20%
No-load supply current	≤10 mA		
Reverse polarity protection	For all electrical connections		

Electromechanics

Size	3 mm	M12	M18
Electrical connection	3-wire, 3-pin, Cable, Cable with plug, M8x1	3-pin, Cable, M12x1, Plugs	3-wire, 3-pin, Cable, M12x1, Plugs
Cable length	0.15 ... 2.5 m	2.5 m	
Material cable sheath	TPE-U(PUR)		
Material insulating sheath	PVC	–	

chanhvinh.com

Datasheet

Mechanical components

Size	3 mm	M12	M18
Type of mounting	Clamped	Via lock nut	
Mounting type	Flush		
Tightening torque	–		20 Nm
Material housing	High-alloy stainless steel	Brass, PBTP, Nickel-plated	

Display, operation

Switching status indication	Yellow LED

Immission, emission

Size	3 mm	M12	M18
Ambient temperature with moving cable	-5 ... 70°C		
Degree of protection	IP67	IP65, IP67	IP67
Immunity to surge	–		0.8
Corrosion resistance class CRC [1]	1 - Low corrosion stress, 4 - Very high corrosion stress	2 - Moderate corrosion stress	–
Pollution degree	–		3
LABS (PWIS) conformity	VDMA24364-B2-L		

1) More information: www.festo.com/x/topic/crc

General technical data CR

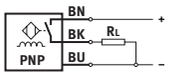

Size	M12	M18
Conforms to standard	EN 60947-5-2	
Approval	RCM trademark, c UL us listed (OL)	
CE mark (see declaration of conformity) [1]	To EU EMC Directive	
Note on materials	–	

1) For information about the area of use, see the declaration of conformity at: www.festo.com/catalogue/sieh → Support/Downloads.
If the devices are subject to usage restrictions in residential, commercial or light-industrial environments, further measures for the reduction of the emitted interference may be necessary.

Input signal, measuring element CR

Ambient temperature	-25 ... 70°C

Output, general CR

Size	M12	M18
Reproducibility of switching values FS	0.3 mm	0.5 mm

Switching output CR

Size	M12	M18
Switching output	NPN, PNP	
Switching element function	N/O contact	
Rated operating distance	6 mm	10 mm
Assured operating distance	4.86 mm	8.1 mm
Reduction factors	Aluminium = 1.0, Stainless steel, 1 mm thick = 0.45, Stainless steel, 2 mm thick = 0.9, Copper = 0.85, Brass = 1.3, Steel St 37 = 1.0	Aluminium = 1.0, Stainless steel, 1 mm thick = 0.4, Stainless steel, 2 mm thick = 0.8, Copper = 0.8, Copper = 0.85, Brass = 1.3, Steel St 37 = 1.0
Hysteresis	≤0.73 mm	≤1.22 mm
Switch-on time	–	
Max. switching frequency DC	–	
Max. output current	200 mA	
Voltage drop	2 V	

chanhvinh.com

Datasheet

Output, further data CR		
Size	M12	M18
Short circuit current rating	Pulsed	
Inductive protective circuit	Integrated, Output current < 100 mA, And switching frequency < 10 Hz	

Electronics CR		
Size	M12	M18
Operational voltage range DC	10 ... 30 V	
Residual ripple	20%	
No-load supply current	≤17 mA	
Reverse polarity protection	For all electrical connections	

Electromechanics CR		
Size	M12	M18
Electrical connection	3-wire, 3-pin, Cable, M12x1, Plugs	
Material cable sheath	TPE-U(PUR)	

Mechanical components CR		
Size	M12	M18
Type of mounting	Via lock nut	
Mounting type	Flush	
Tightening torque	–	
Material housing	High-alloy steel	

Display, operation CR	
Switching status indication	Yellow LED

Immission, emission CR		
Size	M12	M18
Ambient temperature with moving cable	-5 ... 70°C	
Degree of protection	IP67, IP69K	
LABS (PWIS) conformity	VDMA24364-B2-L	
Housing pressure resistance	80 bar	60 bar
Corrosion resistance class CRC [1)]	2 - Moderate corrosion stress	

1) More information: www.festo.com/x/topic/crc

chanhvinh.com

Dimensions

Dimensions – 3 mm, cable Download CAD data www.festo.com

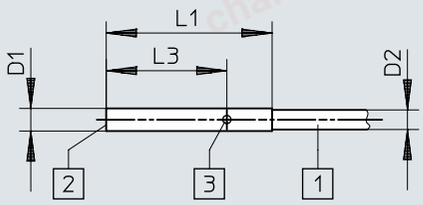

[1] 3-wire cable 2.5 m long
[2] Active surface
[3] 1 switching status indication, yellow

	D1 ø	D2 ø	L1	L3
SIEH-3B-...-S-K-L	3	2,6	22	16

chanhvinh.com

Dimensions

Dimensions – 3 mm, plug Download CAD data www.festo.com

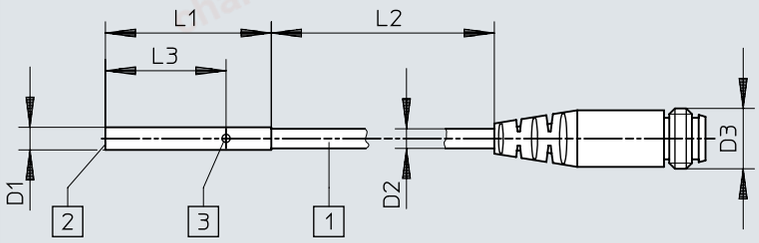

[1] 3-wire cable 2.5 m long
[2] Active surface
[3] 1 switching status indication, yellow

	D1 ø	D2 ø	D3	L1	L2	L3
SIEH-3B-...-S-S-L	3	2,6	M8x1	22	150	16

Dimensions

Dimensions – M12, cable Download CAD data www.festo.com

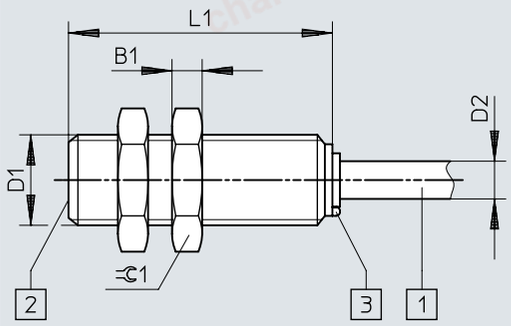

[1] 3-wire cable 2.5 m long
[2] Active surface
[3] 1 switching status indication, yellow

	B1	D1	D2 ø	L1	⫧ 1
SIEH-M12B-...-K-L	4	M12x1	5	35	17

chanhvinh.com

Dimensions

Dimensions – M12 plug Download CAD data www.festo.com

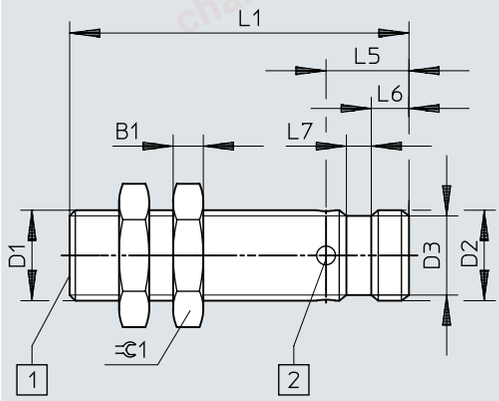

[1] Active surface
[2] 4 switching status indications, yellow

	B1	D1	D2	D3 ø	L1	L5	L6	L7	1
SIEH-M12B-...-S-L	4	M12x1	M12x1	10,5	45	11	5	3,3	17

chanhvinh.com

Dimensions

Dimensions – M18, cable Download CAD data www.festo.com

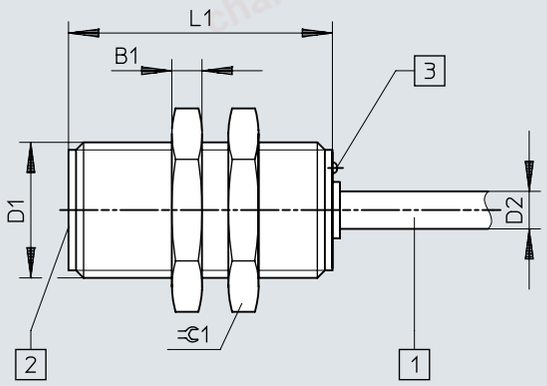

[1] 3-wire cable 2.5 m long
[2] Active surface
[3] 1 switching status indication, yellow

	B1	D1	D2 ø	L1	⊂ 1
SIEH-M18B-...-K-L	4	M18x1	5	35	24

chanhvinh.com

Dimensions

Dimensions – M18 plug Download CAD data www.festo.com

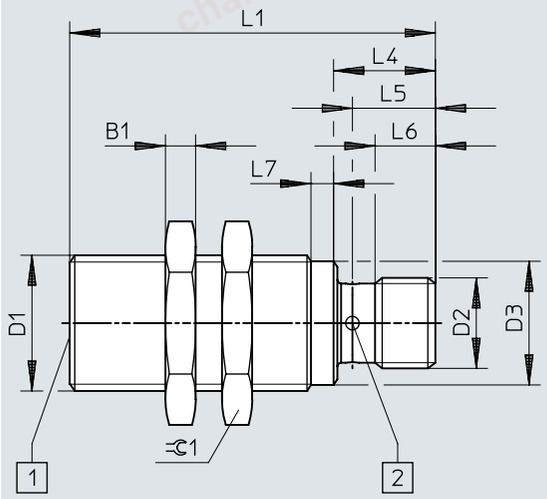

[1] Active surface
[2] 4 switching status indications, yellow

	B1	D1	D2	D3 ø	L1	L4	L5	L6	L7	1
SIEH-M18B-...-S-L	4	M18x1	M12x1	16,4	48,5	13,5	11	8	3	24

chanhvinh.com

Dimensions

Dimensions – Flush mounting Download CAD data www.festo.com

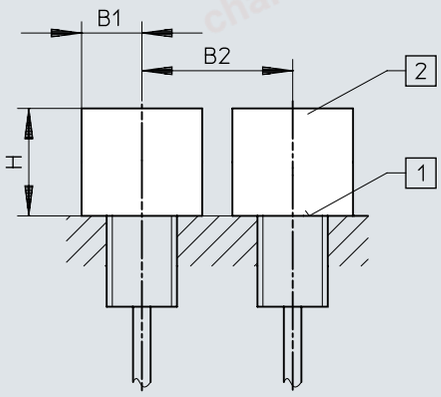

[1] Active surface
[2] Metal-free room

	B1	B2	H
SIEH-3B-PS-S-L	2,5	5	3
SIEH-3B-NS-S-L			
SIEH-M12B-PS-S-L	10	24	12
SIEH-M12B-PO-S-L			
SIEH-M12B-NS-S-L			
SIEH-M12B-NO-S-L			
SIEH-M18B-PS-S-L	18	40	24
SIEH-M18B-PO-S-L			
SIEH-M18B-NS-S-L			
SIEH-M18B-NO-S-L			

chanhvinh.com

Dimensions

Dimensions – SIEH-M12...CR, cable Download CAD data www.festo.com

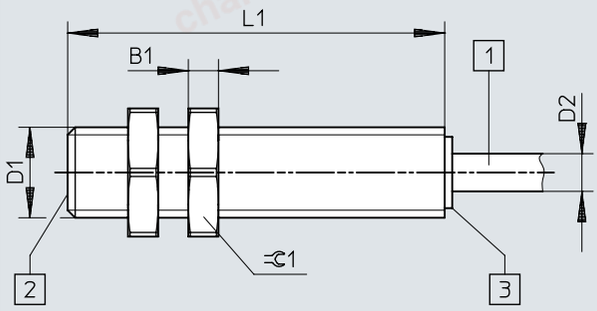

[1] 3-wire cable 2.5 m long
[2] Active surface
[3] 1 switching status indication, yellow

	B1	D1	D2 ø	L1	⫧ 1
SIEH-M12B-...-S-K-L-CR	4	M12x1	5	50	17

chanhvinh.com

Dimensions

Dimensions – SIEH-M12...CR, plug Download CAD data www.festo.com

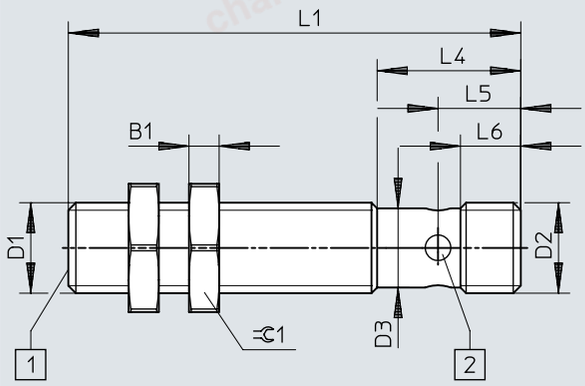

[1] Active surface
[2] 4 switching status indications, yellow

	B1	D1	D2	D3 ø	L1	L4	L5	L6	⊂ 1
SIEH-M12B-...-S-S-L-CR	4	M12x1	M12x1	10,5	60	19	11	8	17

chanhvinh.com

Dimensions

Dimensions – SIEH-M18...CR, cable Download CAD data www.festo.com

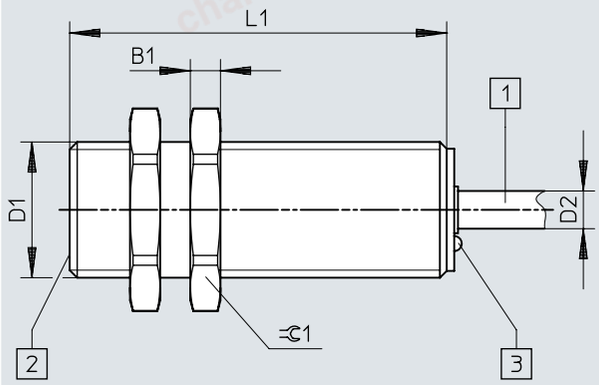

[1] 3-wire cable 2.5 m long
[2] Active surface
[3] 1 switching status indication, yellow

	B1	D1	D2 ø	L1	⊂ 1
SIEH-M18B-...-S-K-L-CR	4	M18x1	5	50	24

chanhvinh.com

Dimensions

Dimensions – SIEH-M18...CR, plug Download CAD data www.festo.com

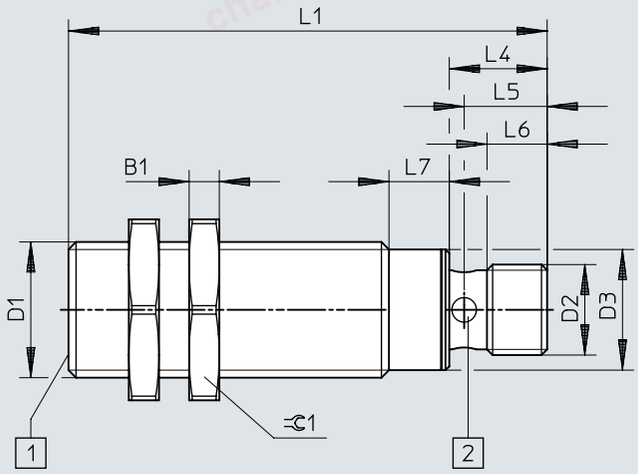

[1] Active surface
[2] 4 switching status indications, yellow

	B1	D1	D2	D3 ø	L1	L4	L5	L6	L7	⫧ 1
SIEH-M18B-...-S-S-L-CR	4	M18x1	M12x1	16	63,5	13	11	8	8	24

chanhvinh.com

Dimensions

Dimensions – SIEH-M...CR, flush mounting Download CAD data www.festo.com

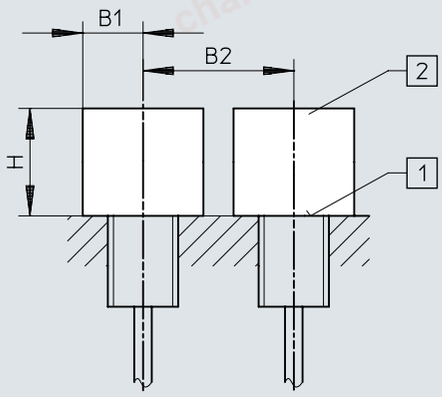

[1] Active surface
[2] Metal-free room

	B1	B2	H
SIEH-M12B-PS-S-L-CR	12	40	18
SIEH-M12B-NS-S-L-CR			
SIEH-M18B-PS-S-L-CR	25	60	30
SIEH-M18B-NS-S-L-CR			

chanhvinh.com

Ordering data

Ordering data 3 mm

	Rated operating distance	Switching output	Switching element function	Product weight	Part no.	Type
	1 mm	NPN	N/O contact	4 g	538265	SIEH-3B-NS-S-L
				18 g	538266	SIEH-3B-NS-K-L
		PNP		4 g	538263	SIEH-3B-PS-S-L
				18 g	538264	SIEH-3B-PS-K-L

Ordering data M12

	Rated operating distance	Switching output	Switching element function	Product weight	Part no.	Type
	4 mm	NPN	N/C contact	30 g	150453	SIEH-M12B-NO-S-L
				110 g	150452	SIEH-M12B-NO-K-L
			N/O contact	30 g	150449	SIEH-M12B-NS-S-L
				110 g	150448	SIEH-M12B-NS-K-L
		PNP	N/C contact	30 g	150455	SIEH-M12B-PO-S-L
				110 g	150454	SIEH-M12B-PO-K-L
			N/O contact	30 g	150451	SIEH-M12B-PS-S-L
				110 g	150450	SIEH-M12B-PS-K-L

Ordering data M18

	Rated operating distance	Switching output	Switching element function	Product weight	Part no.	Type
	8 mm	NPN	N/C contact	43 g	150461	SIEH-M18B-NO-S-L
				108 g	150460	SIEH-M18B-NO-K-L
			N/O contact	43 g	150457	SIEH-M18B-NS-S-L
				108 g	150456	SIEH-M18B-NS-K-L
		PNP	N/C contact	43 g	150463	SIEH-M18B-PO-S-L
				108 g	150462	SIEH-M18B-PO-K-L
			N/O contact	43 g	150459	SIEH-M18B-PS-S-L
				108 g	150458	SIEH-M18B-PS-K-L

Ordering data CR, M12

	Rated operating distance	Switching output	Switching element function	Product weight	Part no.	Type
	6 mm	NPN	N/O contact	28 g	538253	SIEH-M12B-NS-S-L-CR
				90 g	538254	SIEH-M12B-NS-K-L-CR
		PNP		28 g	538251	SIEH-M12B-PS-S-L-CR
				90 g	538252	SIEH-M12B-PS-K-L-CR

Ordering data CR, M18

	Rated operating distance	Switching output	Switching element function	Product weight	Part no.	Type
	10 mm	NPN	N/O contact	53 g	538257	SIEH-M18B-NS-S-L-CR
				115 g	538258	SIEH-M18B-NS-K-L-CR
		PNP		53 g	538255	SIEH-M18B-PS-S-L-CR
				115 g	538256	SIEH-M18B-PS-K-L-CR

chanhvinh.com

Peripherals

Peripherals overview

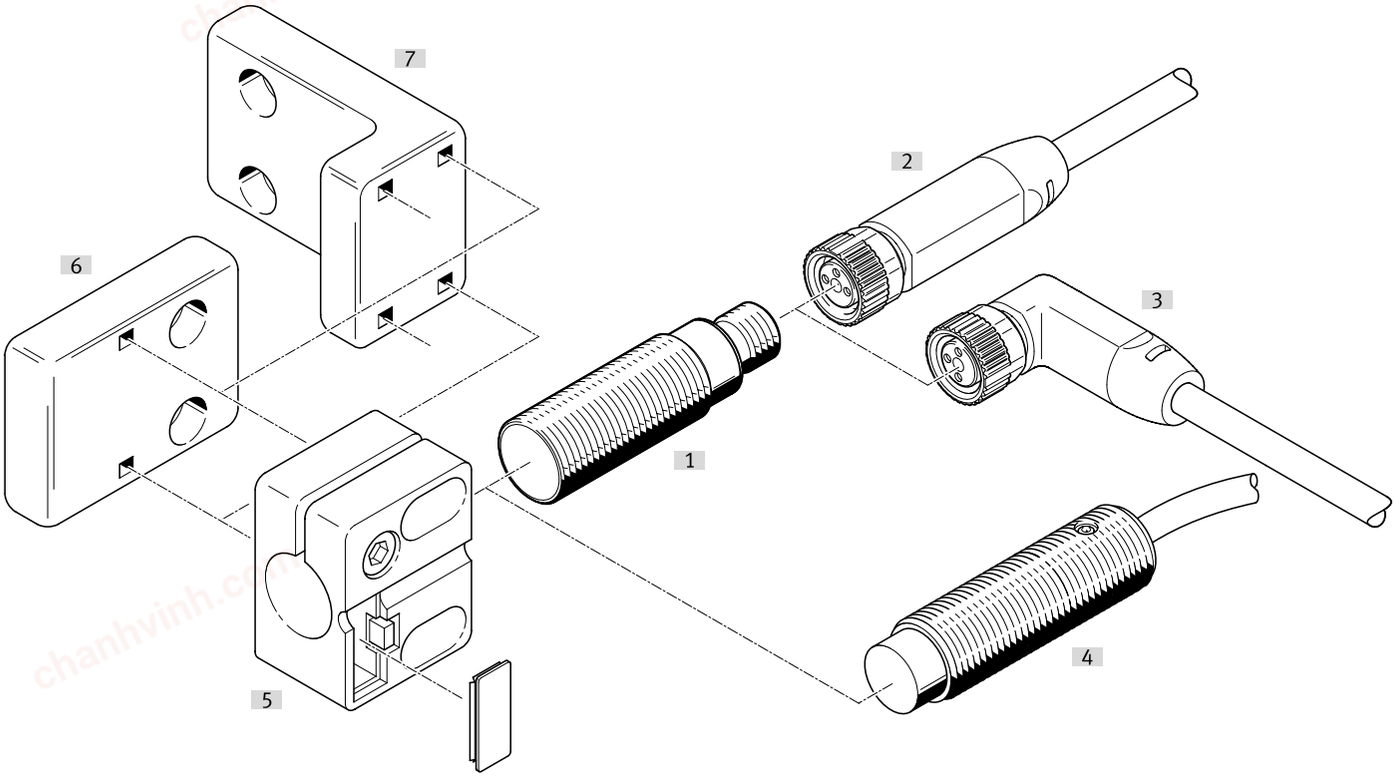

Accessories			→ Link
	Type/order code	Description	
[1]	Proximity switch SIEH-...-S-L	Proximity switch, inductive, with plug	sieh
[2]	Connecting cables NEBA-M12G5-...	Straight socket	20
[3]	Connecting cables NEBA-M12W5-...	Angled socket	20
[4]	Proximity switch SIEH-...-K-L	Proximity switch, inductive, with cable	sieh
[5]	Sensor bracket SIEZ-B	With stop	21
[6]	Sensor bracket SIEZ-NB	Without stop	21
[7]	Sensor bracket SIEZ-UH	Without stop	21

chanhvinh.com

Accessories

Connecting cables M8 socket, 3-pin, without switching status indication

	Electrical connection 1, cable outlet	Electrical connection 2, connector system	Electrical connection 2, cable outlet	Cable length	Product weight	Part no.	Type
	Straight	M12x1, A-coded to EN 61076-2-101	Straight	0.5 m	23 g	8078278	NEBA-M8G3-U-0.5-N-M12G3
				1 m	33 g	8078279	NEBA-M8G3-U-1-N-M12G3
				2.5 m	60 g	8078280	NEBA-M8G3-U-2.5-N-M12G3
				5 m	107 g	8078281	NEBA-M8G3-U-5-N-M12G3
		M8x1, A-coded to EN 61076-2-104		0.5 m	17 g	★ 8078282	NEBA-M8G3-U-0.5-N-M8G3
				1 m	26 g	★ 8078283	NEBA-M8G3-U-1-N-M8G3
				1.5 m	35 g	8078284	NEBA-M8G3-U-1.5-N-M8G3
				2 m	44 g	8078285	NEBA-M8G3-U-2-N-M8G3
				2.5 m	54 g	★ 8078286	NEBA-M8G3-U-2.5-N-M8G3
				5 m	100 g	★ 8078287	NEBA-M8G3-U-5-N-M8G3
				10 m	192 g	★ 8078288	NEBA-M8G3-U-10-N-M8G3
		Open end		1 m	22 g	8078222	NEBA-M8G3-U-1-N-LE3
				2.5 m	50 g	★ 8078223	NEBA-M8G3-U-2.5-N-LE3
				5 m	96 g	★ 8078224	NEBA-M8G3-U-5-N-LE3
				10 m	188 g	★ 8078225	NEBA-M8G3-U-10-N-LE3
				20 m	373 g	★ 8078226	NEBA-M8G3-U-20-N-LE3
	Angled			2.5 m	50 g	★ 8078230	NEBA-M8W3-U-2.5-N-LE3
				5 m	96 g	★ 8078231	NEBA-M8W3-U-5-N-LE3
				10 m	189 g	★ 8078232	NEBA-M8W3-U-10-N-LE3

Connecting cables, M8 socket, 3-pin, snap-locking

	Electrical connection 1, cable outlet	Electrical connection 2, connector system	Cable length	Product weight	Part no.	Type
	Straight	Open end	2.5 m	49 g	8078264	NEBA-M8CG3-U-2.5-N-LE3
			5 m	95 g	8078265	NEBA-M8CG3-U-5-N-LE3
	Angled		2.5 m	49 g	8078266	NEBA-M8CW3-U-2.5-N-LE3
			5 m	95 g	8078267	NEBA-M8CW3-U-5-N-LE3

Connecting cables M12 socket, 5-pin, without switching status indication

	Electrical connection 1, cable outlet	Electrical connection 2, connector system	Electrical connection 2, number of connections/cores	Cable length	Product weight	Part no.	Type
	Straight	M12x1, A-coded to EN 61076-2-101	5	0.5 m	34 g	8078274	NEBA-M12G5-U-0.5-N-M12G5
				1 m	47 g	8078275	NEBA-M12G5-U-1-N-M12G5
				2.5 m	87 g	8078276	NEBA-M12G5-U-2.5-N-M12G5
				5 m	153 g	★ 8078277	NEBA-M12G5-U-5-N-M12G5
		Open end	3	2.5 m	55 g	8078236	NEBA-M12G5-U-2.5-N-LE3
				5 m	102 g	8078237	NEBA-M12G5-U-5-N-LE3
				10 m	194 g	8078238	NEBA-M12G5-U-10-N-LE3
	Angled			2.5 m	56 g	8078245	NEBA-M12W5-U-2.5-N-LE3
				5 m	103 g	8078246	NEBA-M12W5-U-5-N-LE3
				10 m	195 g	8078247	NEBA-M12W5-U-10-N-LE3

M8 plug, 3-pin

	Cable outlet	Electrical connection 2, connection type	Cable diameter	Product weight	Part no.	Type
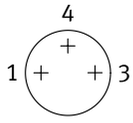	Straight	Cable	2.1 ... 5 mm	5 g	★ 8162298	NECB-S-M8G3-C2

chanhvinh.com

Accessories

M8 plug, 4-pin

	Cable outlet	Electrical connection 2, connection type	Cable diameter	Product weight	Part no.	Type
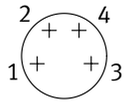	Straight	Cable	2.1 ... 5 mm	5 g	★ 8162299	NECB-S-M8G4-C2

M12 plug, 4-pin

	Cable outlet	Electrical connection 2, connection type	Cable diameter	Product weight	Part no.	Type
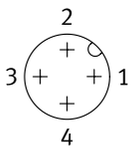	Straight	2x cable	2.1 ... 5.6 mm	24 g	★ 8162295	NECB-S-M12G4-C2-D
		Cable	2.1 ... 7 mm	18 g	★ 8162294	NECB-S-M12G4-C2

Sensor bracket with stop

	Size	Type of mounting	Product weight	Part no.	Type
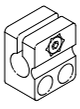	M12	With through-hole	20 g	538348	SIEZ-B-12
	M18		21 g	538350	SIEZ-B-18

Sensor bracket without stop

	Size	Type of mounting	Product weight	Part no.	Type
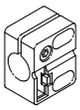	M12	With through-hole	20 g	538347	SIEZ-NB-12
	M18		21 g	538349	SIEZ-NB-18

Sensor bracket without stop

	Type of mounting	Product weight	Part no.	Type
	With through-hole	25 g	538354	SIEZ-UH

Foot mounting

	Size [1]	Product weight	Part no.	Type
	8/10	22 g	5123	HBN-8/10X1

1) Only suitable for M12 sensors.