chanhvinh.com

Proximity switch SDBT-MSX

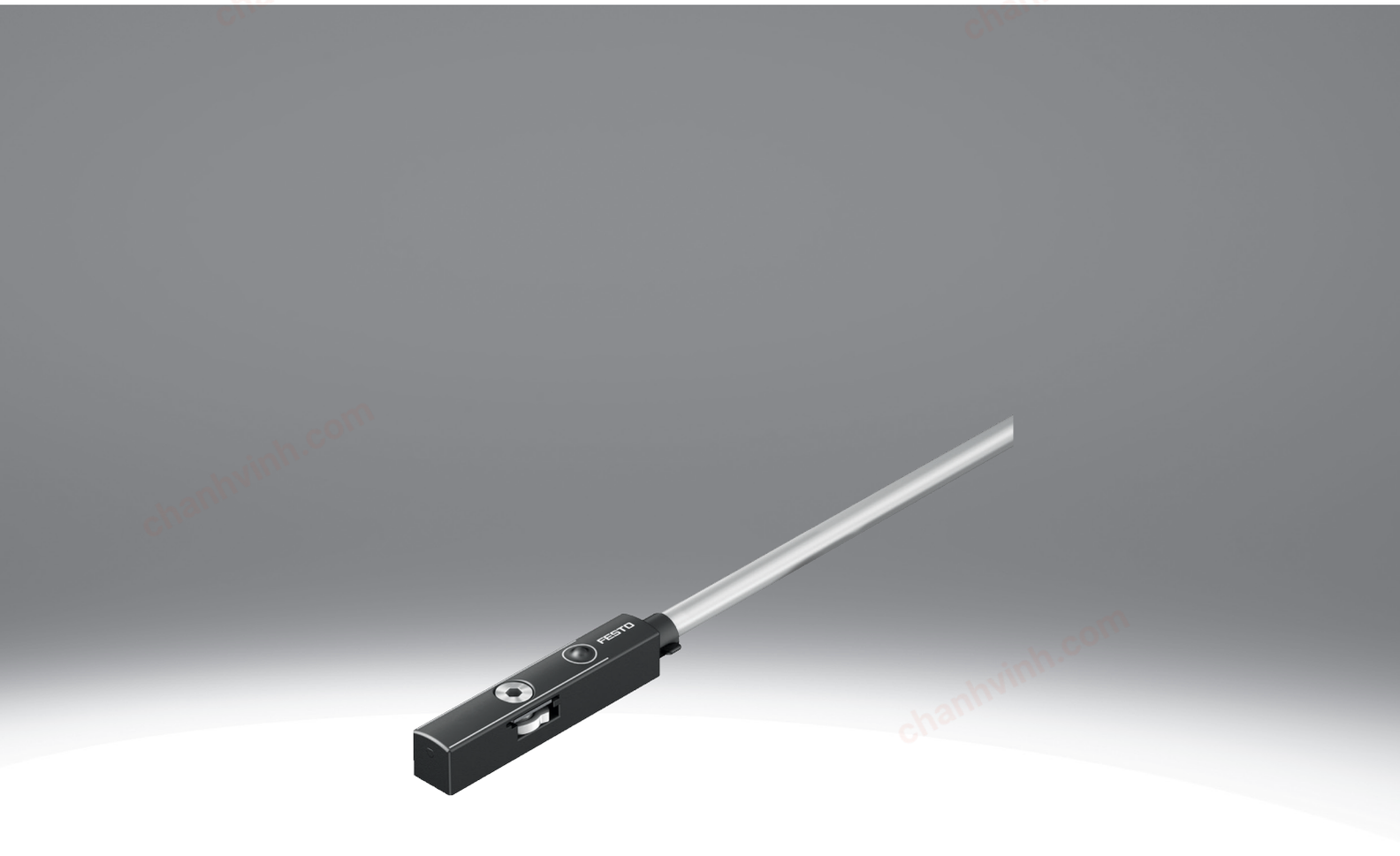

chanhvinh.com

Characteristics

At a glance

- Quick and easy installation without the need to search for switching points
- Mounting without accessories (power supply)
- Reliable teach-in of the switching position under load during operation
- Can be programmed flexibly for expanded applications

Description

The SDBT-MSX is an electronic proximity sensor for contactless feedback of the piston position of drives with magnetic proximity sensing.

Additional features

[X]	Automatic teach-in and programmable

Auto teach-in

- Proximity switch is very easy to install.
- Mount the sensor roughly within the detection range of 20 mm. Without precision adjustment.
- A power supply is not necessary for mounting.
- SDBT-MSX automatically learns the switching point when the system is started up.
- The taught-in switching point remains stored in the sensor even after the power supply is switched off.

Programmable

- Additional functions can be programmed via the integrated operating button.
- Switching point (alternative to auto teach-in)
- Switching window range between 2 ... 15 mm
- PNP/NPN
- NO/NC
- Reset

Overview

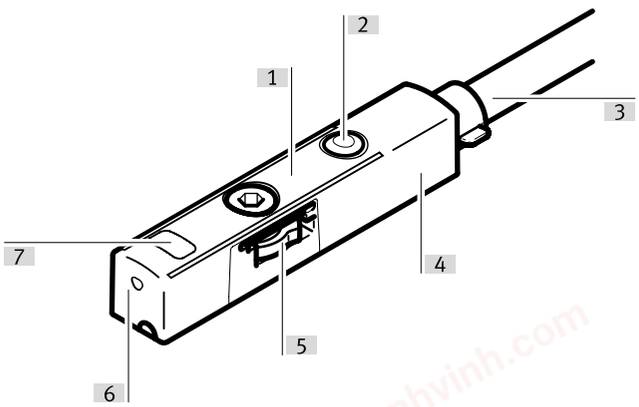

[1] Auto teach-In: the proximity switch detects the end position of the piston stroke and automatically learns the switching point during operation
[2] Capacitive operating button: Programming switching point, programming PNP/NPN, programming NO/NC, programming switching window 2 15 mm
[3] Cable quality energy chain + robot: 3 wire, M8, M12 plug and open end
[4] Electronic: switching output PNP/NPN, NO/NC
[5] Sturdy and secure mounting with retaining screw
[6] Compact, sturdy housing: 28 mm short, IP65 and IP68
[7] 2 LED: teach-in display, piston within sensing range, switching output ON

chanhvinh.com

Type code

001	Series	
SDBT	Sensor, position, binary, T series	

002	Sensor version	
M	Can be inserted in the slot	

003	Sensor principle	
S	Contactless (solid state)	

004	Additional features	
X	Automatic teach-in and programmable	

005	Nominal operating voltage	
1	24 V DC	

006	Display	
L	LED	

007	Digital switching output	
NU	3-wire N/O contact, NPN	
PU	3-wire N/O contact, PNP	

008	Cable characteristic	
E	Suitable for energy chains/robots	

009	Cable length [m]	
0.3	0.3 m	
2.5	2.5 m	
5	5 m	

010	Cable identification	
N	Without label holder	

011	Electrical connection	
LE	Open end	
M8	Plug M8, A-coded	
M12	Plug M12, A-coded	

chanhvinh.com

Datasheet

General technical data

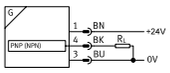

Design	For T-slot
Based on standard	EN 60947-5-2
Approval	RCM trademark, c UL us listed (OL)
Certificate issuing authority	UL E232949
CE mark (see declaration of conformity) [1]	To EU EMC Directive, In accordance with EU RoHS Directive
UKCA marking (see declaration of conformity)[2]	To UK instructions for EMC, To UK RoHS instructions
Instructions on use	https://www.festo.com/Drive-Sensor-Overview
Note on materials	RoHS-compliant, Free of halogen
LABS (PWIS) conformity	VDMA24364-B2-L
Suitability for the production of Li-ion batteries	Suitable for battery production with reduced Cu/Zn/Ni values (F1a)
Cleanroom suitability, measured according to ISO 14644-14	Element installed statically, no meaningful evaluation possible according to ISO 14644-1

1) Please refer to the declaration of conformity for the area of use: www.festo.com/catalogue/sdbt-msx → Support/Downloads.
If the devices are subject to usage restrictions in residential, commercial or light-industrial environments, further measures for the reduction of the emitted interference may be necessary.
2) More information www.festo.com/catalogue/sdbt → Support/Downloads

Input signal/measuring element

Measuring principle	Magnetic Hall
Measured variable	Position
Ambient temperature	-40 ... 85°C
Ambient temperature with moving cable	-20 ... 85°C

Signal processing

Max. travel speed	3 m/s

Switching output

Switching output	PNP/NPN, switchable
Switching element function	N/O or N/C contact, switchable
Repetition accuracy	0.1 mm
Hysteresis	0.2
Switch-on time	≤2 ms
Switch-off time	≤2 ms
Max. switching frequency	200 Hz
Max. output current	100 mA
Max. output current using mounting kits	100 mA
Max. switching capacity DC	2.8 W
Max. switching capacity DC using mounting kits	2.8 W
Voltage drop	<1.5 V
Min. load current	0.15 mA
Off-state current	<0.2 mA

Output, additional data

Short circuit current rating	yes
Overload protection	Yes

chanhvinh.com

Datasheet

Electronics	
Rated operational voltage DC	24 V
Operational voltage range DC	10 ... 30 V
Reverse polarity protection	For all electrical connections

Electromechanics		
Electrical connection 1, connection type	Cable	Cable with plug
Electrical connection 1, connector system	Open end	M12x1, A-coded to EN 61076-2-101, M8x1, A-coded, to EN 61076-2-104
Electrical connection 1, number of connections/cores	3	
Connection outlet orientation	In-line	
Cable characteristic	Suitable for energy chains/robot applications	
Test conditions cable	Bending strength: to Festo standard, Test conditions on request, Torsional strength: > 300,000 cycles, ±270°/0.1 m, Energy chain: > 5 million cycles, bending radius 28 mm	

Mechanical components		
Electrical connection 1, connection type	Cable	Cable with plug
Type of mounting	Screw-clamped, Insertable in the slot from above	
Electrical connection 1, type of mounting	–	Screw-type lock, Rotatable
Electrical connection 1, compatible type of mounting	–	Compatible with rotatable/non-rotatable screw-type lock
Mounting position	optional	
Max. tightening torque	0.6 Nm	
Material housing	PA-reinforced, High-alloy stainless steel	
Housing colour	Black	
Material cable sheath	TPE-U(PUR)	
Cable sheath colour	Grey	
Material screw-type lock	–	Nickel-plated brass
Wire ends	Wire ferrule	–

Display/operation	
Setting options	Auto teach-in, Capacitive pushbutton
Switching status indication	Yellow LED
Status indication	Green LED

Immission/emission	
Ambient temperature with moving cable	-20 ... 85°C
Degree of protection	IP65, IP68, IP69K

chanhvinh.com

Dimensions

Dimensions – Proximity switch with plug Download CAD data www.festo.com

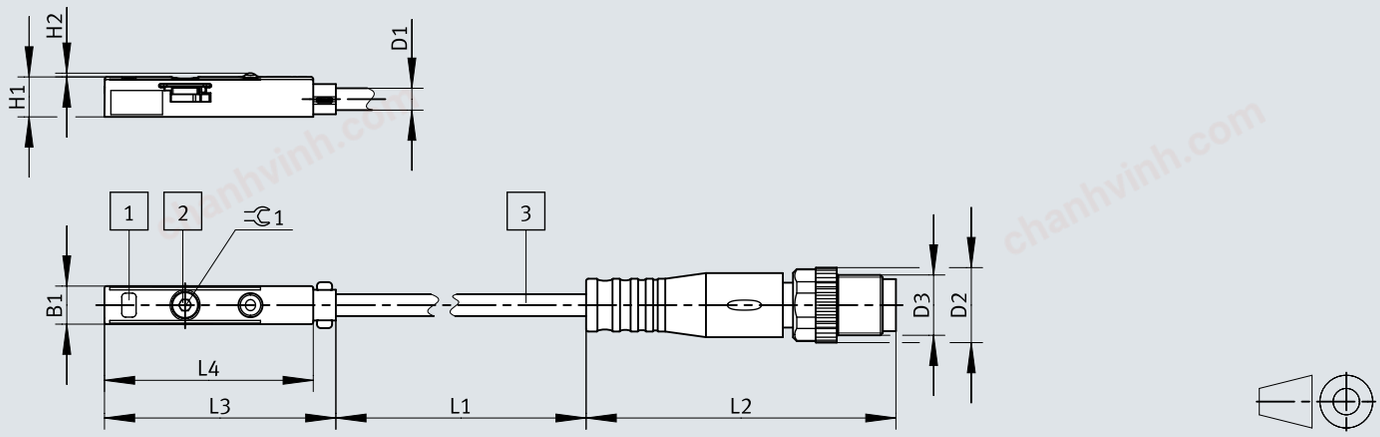

[1] Yellow and green LED
[2] Allen key
[3] Connecting cables

	B1	D1 Ø	D2 Ø	D3	H1	H2	L1	L2	L3	L4	1
SDBT-MSX-1L-PU-E-0,3-N-M8	5,1	2,9	10	M8x1	5,3	0,5	300	41,1	30,7	27,7	1,5
SDBT-MSX-1L-NU-E-0,3-N-M8	5,1	2,9	10	M8x1	5,3	0,5	300	41,1	30,7	27,7	1,5
SDBT-MSX-1L-PU-E-0,3-N-M12	5,1	2,9	15	M12x1	5,3	0,5	300	54,5	30,7	27,7	1,5

chanhvinh.com

Dimensions

Dimensions – Mounting kit SMBR Download CAD data www.festo.com

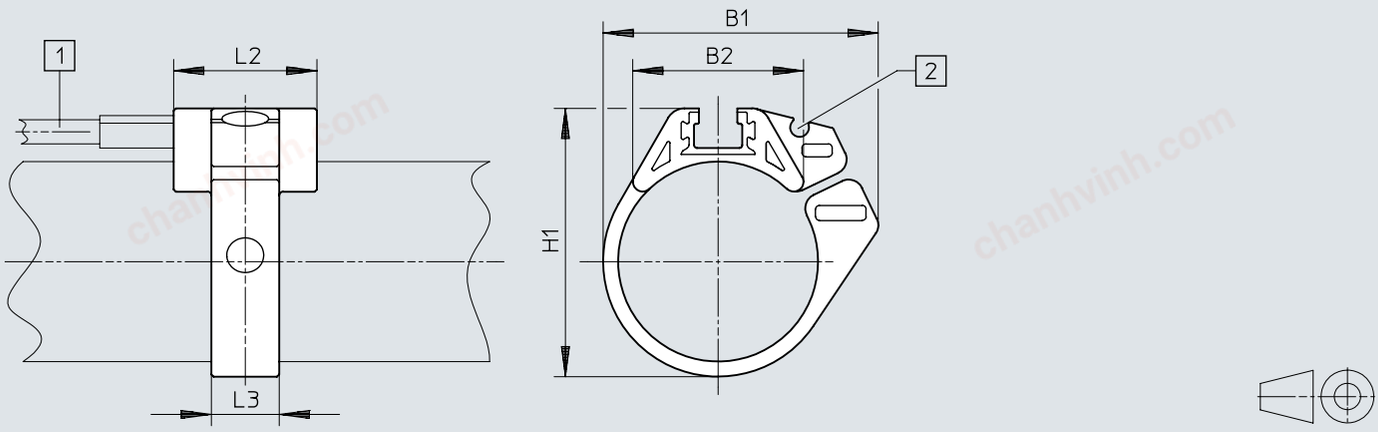

[1] Proximity switches SME-8- ..., SMT-8- ...
[2] Guide slot for switch cable

	B1	B2	H1	L2	L3
SMBR-8-8	18,9	12,3	17,5	19	7
SMBR-8-10	20,4	13,7	19,9	19	7
SMBR-8-12	22,7	14,3	21,9	19	7
SMBR-8-16	28,2	16,9	25,7	19	8
SMBR-8-20	34,5	20,8	30,4	19	9
SMBR-8-25	36,7	22,7	35,6	19	9
SMBR-8-32	41,7	24,6	42,7	19	9
SMBR-8-40	47,1	26,5	50,7	19	9
SMBR-8-50	56,4	28,6	61,5	19	9
SMBR-8-63	69,4	32	74,5	19	9

chanhvinh.com

Dimensions

Dimensions – Sensor holder DASP-M4-...-A Download CAD data www.festo.com

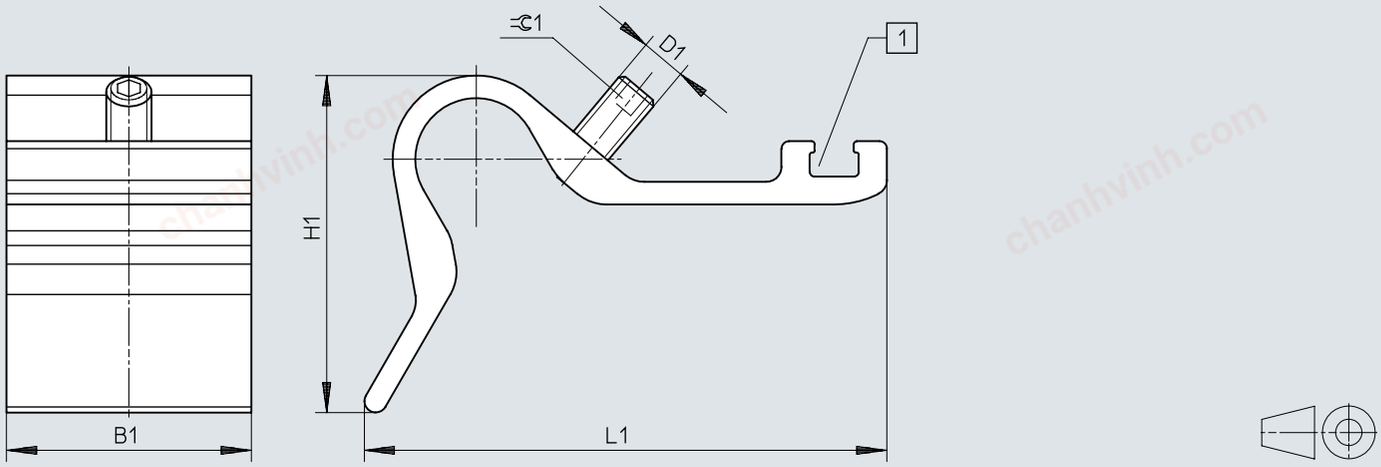

[1] Slot for proximity switch

	B1	D1	H1	L1	⊂ 1
DASP-M4-125-A	32,5	M5	28	45,4	2,5
DASP-M4-160-A	32,5	M6	44,7	69,4	3
DASP-M4-250-A	32,5	M6	56,3	88	3
DASP-M4-320-A	32,5	M6	56,3	88	3

chanhvinh.com

Dimensions

Dimensions – Positioning element SMM

Download CAD data www.festo.com

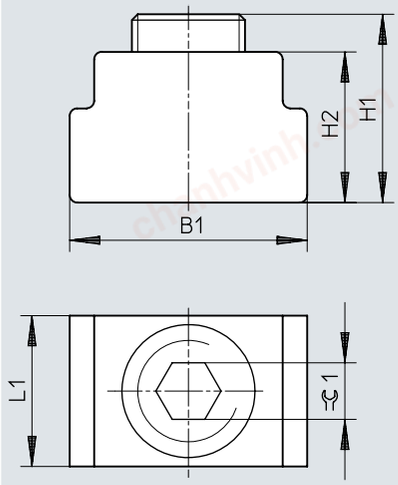

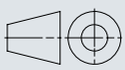

	B1	H1	H2	L1	⊂1
SMM-8	6,3	5,0	4,0	4,0	1,5

chanhvinh.com

Dimensions

Dimensions – Proximity switch open end Download CAD data www.festo.com

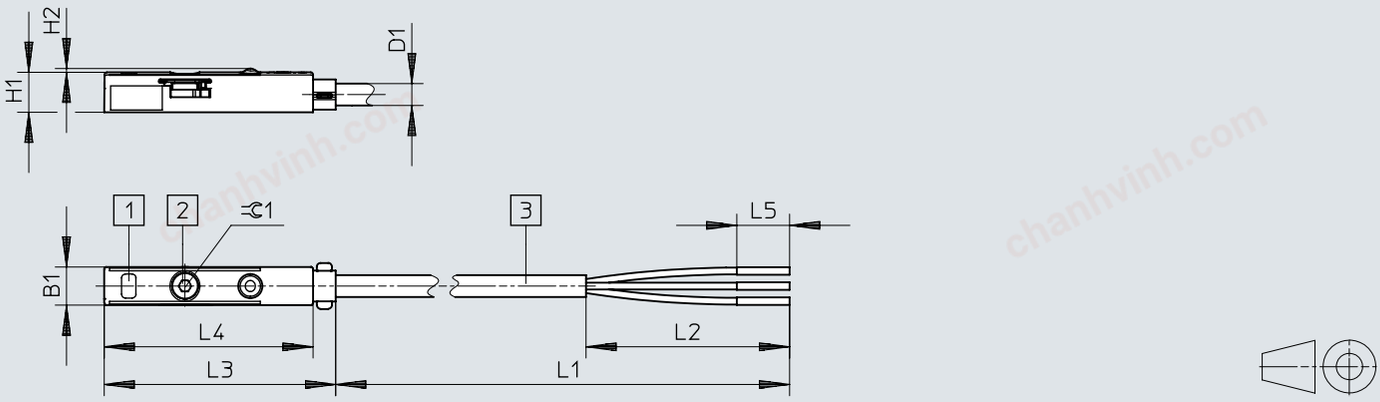

[1] Yellow and green LED
[2] Retaining screw with hexagon socket
[3] Connecting cables

SDBT-MSX	B1	D1 ø	H1	H2	L1	L2	L3	L4	L5	⊂ 1
SDBT-MSX-1L-PU-E-2,5-N-LE	5,1	2,9	5,3	0,5	2500	50	30,7	27,7	7	1,5
SDBT-MSX-1L-PU-E-5-N-LE					5000					
SDBT-MSX-1L-NU-E-2,5-N-LE					2500					
SDBT-MSX-1L-NU-E-5-N-LE					5000					

chanhvinh.com

Dimensions

Dimensions – Mounting kit SMBR-8-8/100-S6 Download CAD data www.festo.com

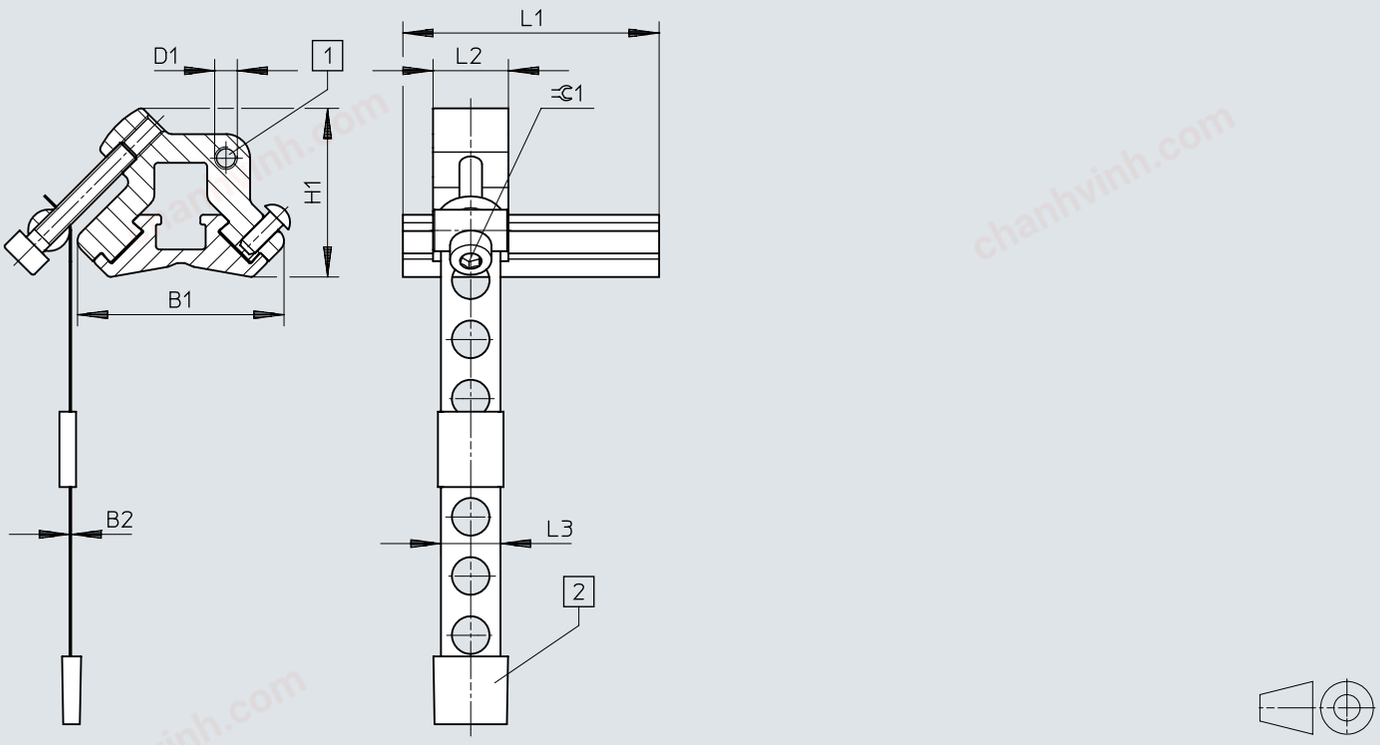

[1] Mounting thread for proximity switch SM ... O-8E
[2] Protective cap

	B1	B2	D1	H1	L1	L2	L3	⌀C 1
SMBR-8-8/100-S6	27,4	0,2	M3	22,4	34	10	7,9	2,5

chanhvinh.com

Dimensions

Dimensions – Mounting SMBZ-8-32/100 Download CAD data www.festo.com

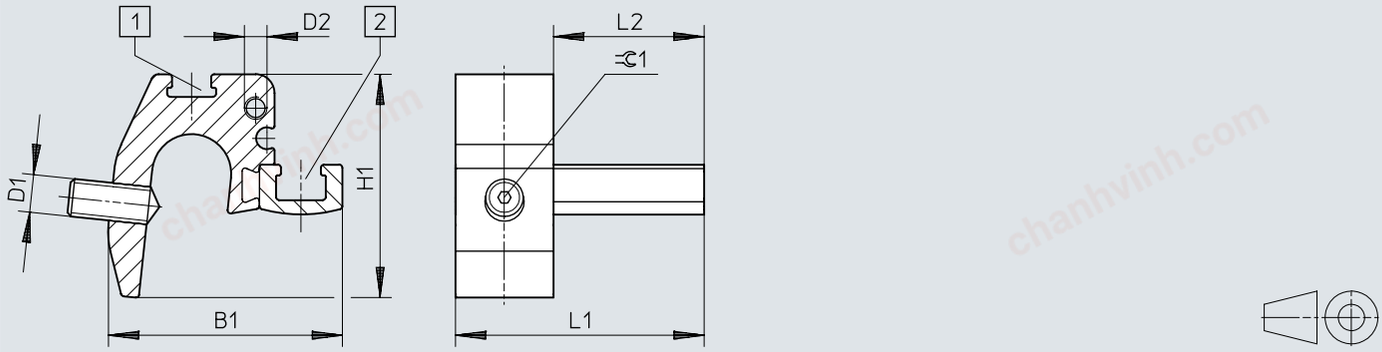

[1] Slot for inscription label
[2] Slot for proximity switch

SDBT-MSX	B1	D1	D2	H1	L1	L2	⌀C1
SMBZ-8-32/100	31	M5	M3	30	33	20	1,5

chanhvinh.com

Dimensions

Dimensions – Mounting SMBZ-8-125/320 Download CAD data www.festo.com

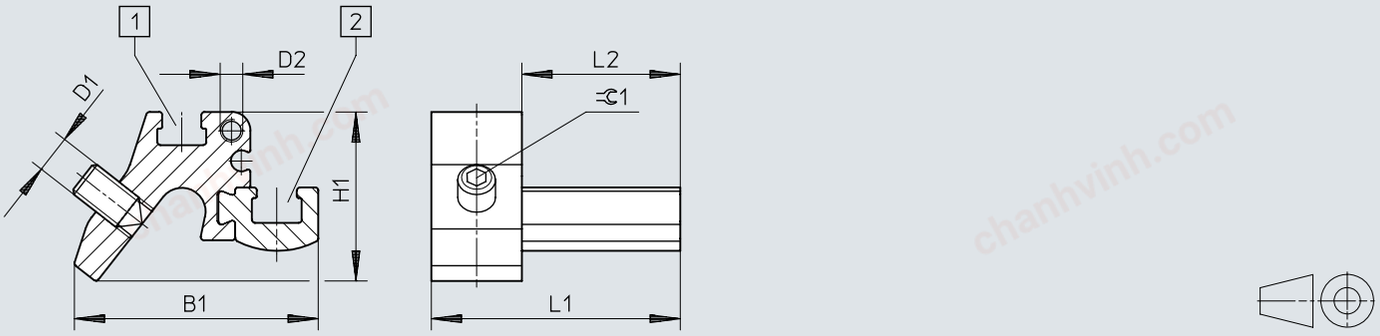

[1] Slot for inscription label
[2] Slot for proximity switch

SDBT-MSX	B1	D1	D2	H1	L1	L2	⌀C1
SMBZ-8-125/320	32,3	M5	M3	22	33	20	2,5

chanhvinh.com

Ordering data

Proximity switch

	Switching output	Cable length	Product weight	Part no.	Type
	PNP/NPN, switchable	0.3 m	10 g	**8059123**	**SDBT-MSX-1L-NU-E-0.3-N-M8**
				8059120	**SDBT-MSX-1L-PU-E-0.3-N-M8**
			12 g	**8222734**	**SDBT-MSX-1L-PU-E-0.3-N-M12**
		2.5 m	29 g	**8059121**	**SDBT-MSX-1L-PU-E-2.5-N-LE**
				8059124	**SDBT-MSX-1L-NU-E-2.5-N-LE**
		5 m	56 g	**8059125**	**SDBT-MSX-1L-NU-E-5-N-LE**
				8059122	**SDBT-MSX-1L-PU-E-5-N-LE**

chanhvinh.com

Peripherals

Peripherals overview

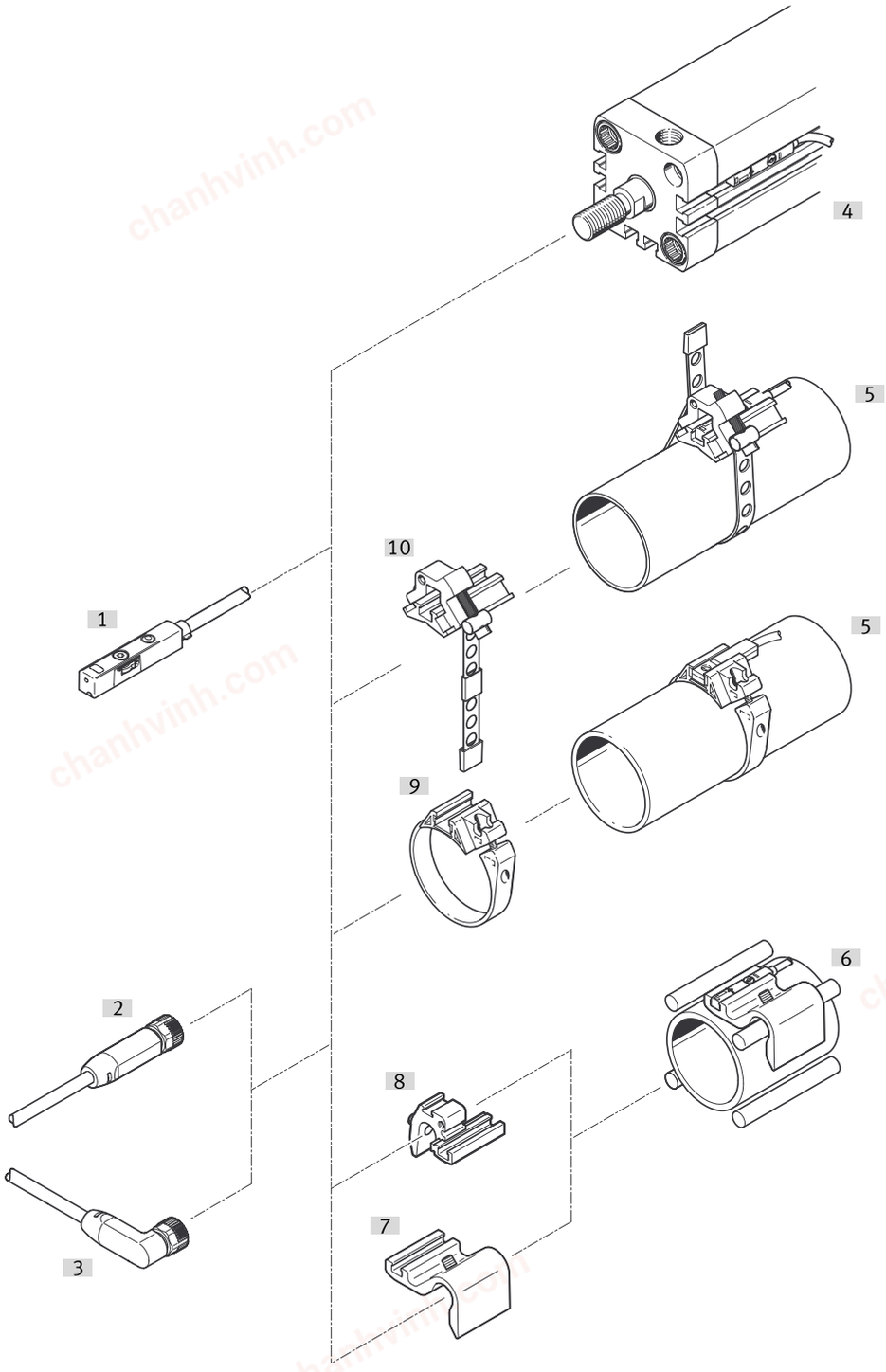

Accessories			→ Link
	Type/order code	Description	
[1]	Proximity switch SDBT-MSX-...-	-	sdbt-msx
[2]	Connecting cables NEBA-M...G...	Straight socket	17
[3]	Connecting cables NEBA-M...W...	Angled socket	18
[4]	Drives with T-slot	-	-
[5]	Round cylinder	Ex.: DSNU	-
[6]	Drives with tie rod or mounting rod	For example: DSBG	-
[7]	Sensor bracket DASP-M4-...	-	17
[8]	Sensor bracket SMBZ-8-...	-	17
[9]	Mounting kit SMBR	For round cylinders	17

chanhvinh.com

Peripherals

Accessories			→ Link
	Type/order code	Description	
[10]	Mounting kit SMBR-8-8/100-S6	Heat-resistant design	17

chanhvinh.com

chanhvinh.com

Accessories

Mounting kit SMBR-8-8/100-S6

	Material housing	Part no.	Type
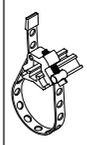	Wrought aluminium alloy, Anodised, High-alloy stainless steel	538937	SMBR-8-8/100-S6

Mounting kit SMBR

	Material retaining bracket	Material profile	Part no.	Type
	POM	Wrought aluminium alloy	175096	SMBR-8-25
			175092	SMBR-8-10
			175099	SMBR-8-50
			175091	SMBR-8-8
			175098	SMBR-8-40
			175094	SMBR-8-16
			175095	SMBR-8-20
			175100	SMBR-8-63
			175093	SMBR-8-12
			175097	SMBR-8-32

Sensor bracket DASP-M4-...-A

	Material housing	Part no.	Type
	Wrought aluminium alloy, Anodised	1451483	DASP-M4-125-A
		3015256	DASP-M4-320-A
		1553813	DASP-M4-160-A
		1456781	DASP-M4-250-A

Mounting SMBZ-8-...

	Material housing	Part no.	Type
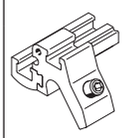	Anodised wrought aluminium alloy	537808	SMBZ-8-125/320
		537806	SMBZ-8-32/100

Positioning element SMM

	Material housing	Part no.	Type
	Wrought aluminium alloy, Anodised	547941	SMM-8

Connecting cables socket M8x1, 3-pin, straight socket

	Electrical connection 1, number of connections/ cores	Electrical connection 1, connector system	Cable length	Part no.	Type
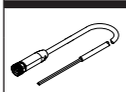	3	M8x1, A-coded, to EN 61076-2-104	2.5 m	8078223	NEBA-M8G3-U-2.5-N-LE3
			5 m	8078224	NEBA-M8G3-U-5-N-LE3

chanhvinh.com

Accessories

Connecting cables socket M8x1, 3-pin, angled plug socket

	Electrical connection 1, number of connections/ cores	Electrical connection 1, connector system	Cable length	Part no.	Type
	3	M8x1, A-coded, to EN 61076-2-104	2.5 m	**8078230**	**NEBA-M8W3-U-2.5-N-LE3**
			5 m	**8078231**	**NEBA-M8W3-U-5-N-LE3**

Connecting cables socket M12x1, 5-pin, straight socket

	Electrical connection 1, number of connections/ cores	Electrical connection 1, connector system	Cable length	Part no.	Type
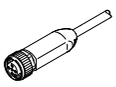	5	M12x1, A-coded to EN 61076-2-101	2.5 m	**8078236**	**NEBA-M12G5-U-2.5-N-LE3**
			5 m	**8078237**	**NEBA-M12G5-U-5-N-LE3**

Connecting cables socket M12x1, 5-pin, angled plug socket

	Electrical connection 1, number of connections/ cores	Electrical connection 1, connector system	Cable length	Part no.	Type
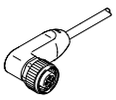	5	M12x1, A-coded to EN 61076-2-101	2.5 m	**8078245**	**NEBA-M12W5-U-2.5-N-LE3**

Mounting components

	Type of mounting	Part no.	Type
	Clamped in T-slot	**534254**	**SMBK-8**

Inscription labels

	Material label	Part no.	Type
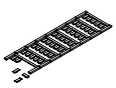	PC	**541598**	**ASLR-L-423**

Inscription label holder

	Length	Width	Height	Size of pack	Part no.	Type
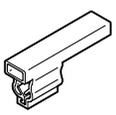	23 mm	5.4 mm	10.3 mm	100	**8078306**	**NEAU-LH-2**