chanhvinh.com

Signal converter SCDN

FESTO



chanhvinh.com

Characteristics

At a glance



Connections for a maximum of 2 sensor transmitters

Flexible in use
- Scalable transmitter signal range (e.g: 1 ... 5 V DC
- Measured value indicator individually configurable
- Numerous integrated switching functions

Display in various units
- bar, kPa, MPa, psi, mmHg, inchHg, inchH20, kgf/cm², l/min, l/h, scfm, scfh, GPM, mm, inch, V, mA, %

Numerous integrated functions
- Min./max. monitoring
- PNP/NPN, switchable
- Eco mode
- Tamper protection with security code
- Adjustable filter for smoothing the signals
- Quick and easy setting of switching points via teach-in
- Easy to copy parameters to additional devices

Simple operation
- Blue display with high-contrast white text and red switchover
- Intuitive menu navigation, as for pressure sensors SPAU and SPAN

Overview

Product description

The signal converter detects analogue current or voltage signals from sensors (transmitters). The connection to the higher-level system is via 1 or 2 switching outputs or alternatively an IO-Link® interface. The signal converter has a display for visualising the signals and parameters and can therefore be used as a remote display for transmitters. The switching outputs can be configured for monitoring a threshold value, a signal range or a signal change. The outputs can be set as PNP or NPN and normally open (NO) or normally closed (NC). Process values can be read out and parameters can be changed and transmitted to additional devices via the IO-Link® interface.

Application area

- Converts analogue signals into digital switching signals
- Conversion of analogue signals in IO-Link®
- Reduction in analogue signals to controllers
- Fast and decentralised signal processing to reduce the load on the controller
- Remote visualisation of process values, the display is decentralised
- Volume detection, e.g.: Pressure transmitters, vacuum transmitters, flow transmitters
- Object detection, for example: Inductive sensors with analogue output, distance sensors
- Position detection, e.g.: Position transmitter for pneumatic cylinders
- Auto difference monitoring, e.g. Leakage test

chanhvinh.com

Characteristics

Electrical input

[2V] 2 x 0 ... 10 V

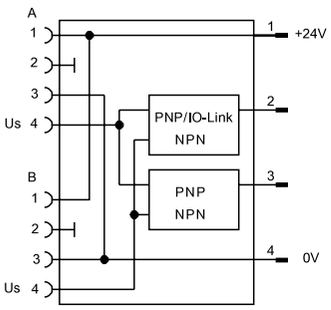

[2A] 2 x 0 ... 20 mA

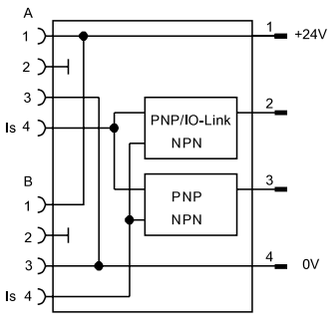

Electrical output 1

[PNLK] PNP/NPN/IO-Link

IO-Link

Electrical connection

[L1] Plug type L1

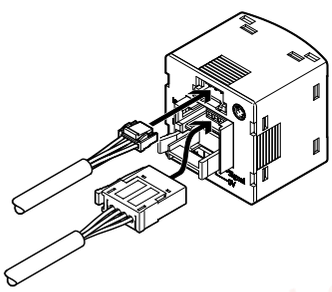

2-step connection

[1] NEBS-L1 connecting cable
[2] NECU plug for analogue inputs

chanhvinh.com

Type code

001	Series	
SCDN	Signal converter	

002	Electrical input	
2A	2 x 0 ... 20 mA	
2V	2 x 0 ... 10 V	

003	Electrical connection, input	
EC	Socket EC	

004	Number of pins, input	
4	4-pin	

005	Electrical output 1	
PNLK	PNP/NPN/IO-Link	

006	Electrical connection	
L1	Plug type L1	

chanhvinh.com

Datasheet

General technical data

Approval	RCM trademark, c UL us listed (OL)
Certificate issuing authority	UL E322346
CE mark (see declaration of conformity)	To EU EMC Directive, In accordance with EU RoHS Directive
UKCA marking (see declaration of conformity)	To UK instructions for EMC, To UK RoHS instructions
Ambient temperature	0 ... 50°C
Note on materials	RoHS-compliant

Input signal

Measured variable	Voltage	Current
analog input	0 - 10 V	0 - 20 mA
Typical sampling interval	1 ms	

Output, general

Accuracy in ± % FS	0.5 %FS
Repetition accuracy in ± %FS	0.2 %FS

Switching output

Switching output	2 x PNP or 2 x NPN, switchable
Switching function	Freely programmable
Switching element function	N/C or N/O contact, switchable
Max. output current	100 mA
Short circuit current rating	yes

Communication interface

Protocol	IO-Link®
IO-Link, Protocol version	Device V 1.1
IO-Link, Profile	Smart sensor profile
IO-Link, Function classes	Binary data channel (BDC), Process data variable (PDV), Identification, Diagnostics, Teach channel
IO-Link, communication mode	COM2 (38.4 kBaud)
IO-Link, SIO-Mode support	Yes
IO-Link, Port class	A
IO-Link, Process data length OUT	0 bytes
IO-Link, Process data length IN	5 bytes
IO-Link, Process data content IN	14 bit PDV (measured value InA), 14 bit PDV (measured value InB), 2 bit BDC (measured value monitoring)
IO-Link, Min. cycle time	5 ms
IO-Link, Data storage required	0.5 KB

Output pin assignment

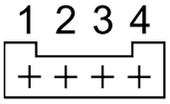

1 = Operating voltage + 24 V DC
2 = Switching output A / IO-Link®
3 = Switching output B
4 = 0 V DC

Pin assignment input

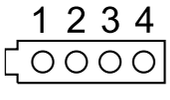

1 = Operating voltage for connected signal converter + 24 V DC
2 = NC
3 = 0 V DC
4 = Analogue input

chanhvinh.com

Datasheet

Electronics	
Operational voltage range DC	15 ... 30 V
Reverse polarity protection	For all electrical connections

Electromechanics	
Electrical connection 1, connection type	Plugs
Electrical connection 1, connector system	Connection pattern L1J
Electrical connection 1, number of connections/cores	4
Electrical connection 2, connection type	2x socket
Electrical connection 2, connector system	Connection pattern EC
Electrical connection 2, number of connections/cores	4

Mechanics	
Type of mounting	Front panel mounting, Via wall/surface bracket
Material housing	PA-reinforced
Product weight	23 g

Display, operation	
Display type	Illuminated LCD, multi-colour
Setting options	IO-Link®, Teach-in, Via display and keys
Protection against tampering	IO-Link, PIN code

Immission, emission	
Degree of protection	IP40
LABS (PWIS) conformity	VDMA24364-B2-L
Corrosion resistance class CRC [1)]	2 - Moderate corrosion stress

1) More information www.festo.com/x/topic/kbk

chanhvinh.com

Dimensions

Dimensions – Signal converter SCDN Download CAD data www.festo.com

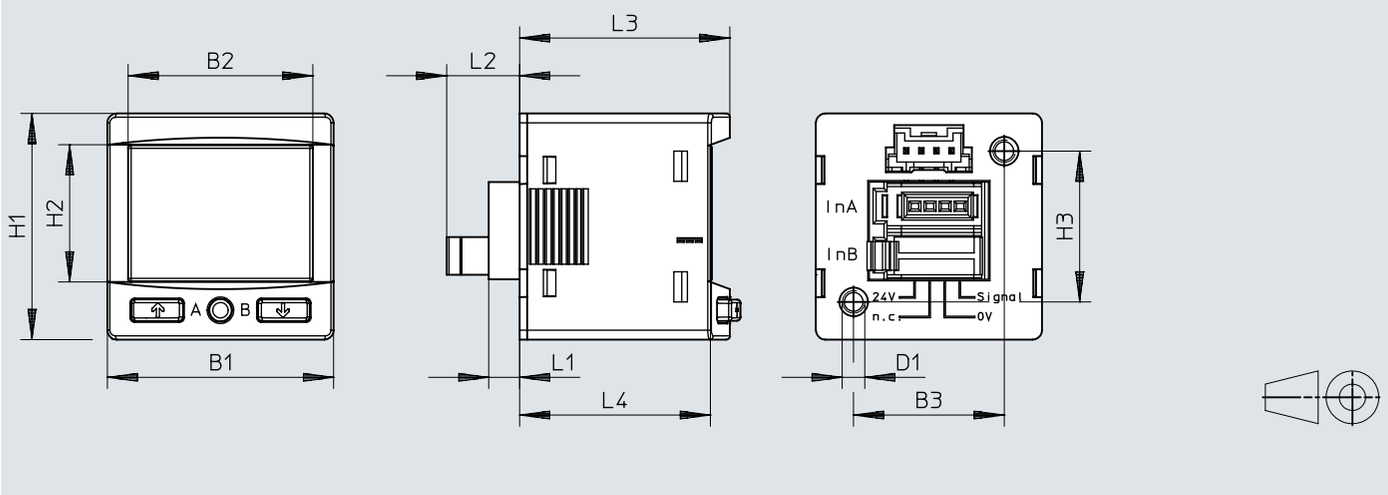

	B1	B2	B3	D1	H1	H2	H3	L1	L2	L3	L4
SCDN-2V-EC4-PNLK-L1 SCDN-2A-EC4-PNLK-L1	30	24,5	20	M3	30	18,2	20	4,1	9,7	27,9	~25,3

chanhvinh.com

Dimensions

Dimensions – Mounting bracket SAMH-PU-A Download CAD data www.festo.com

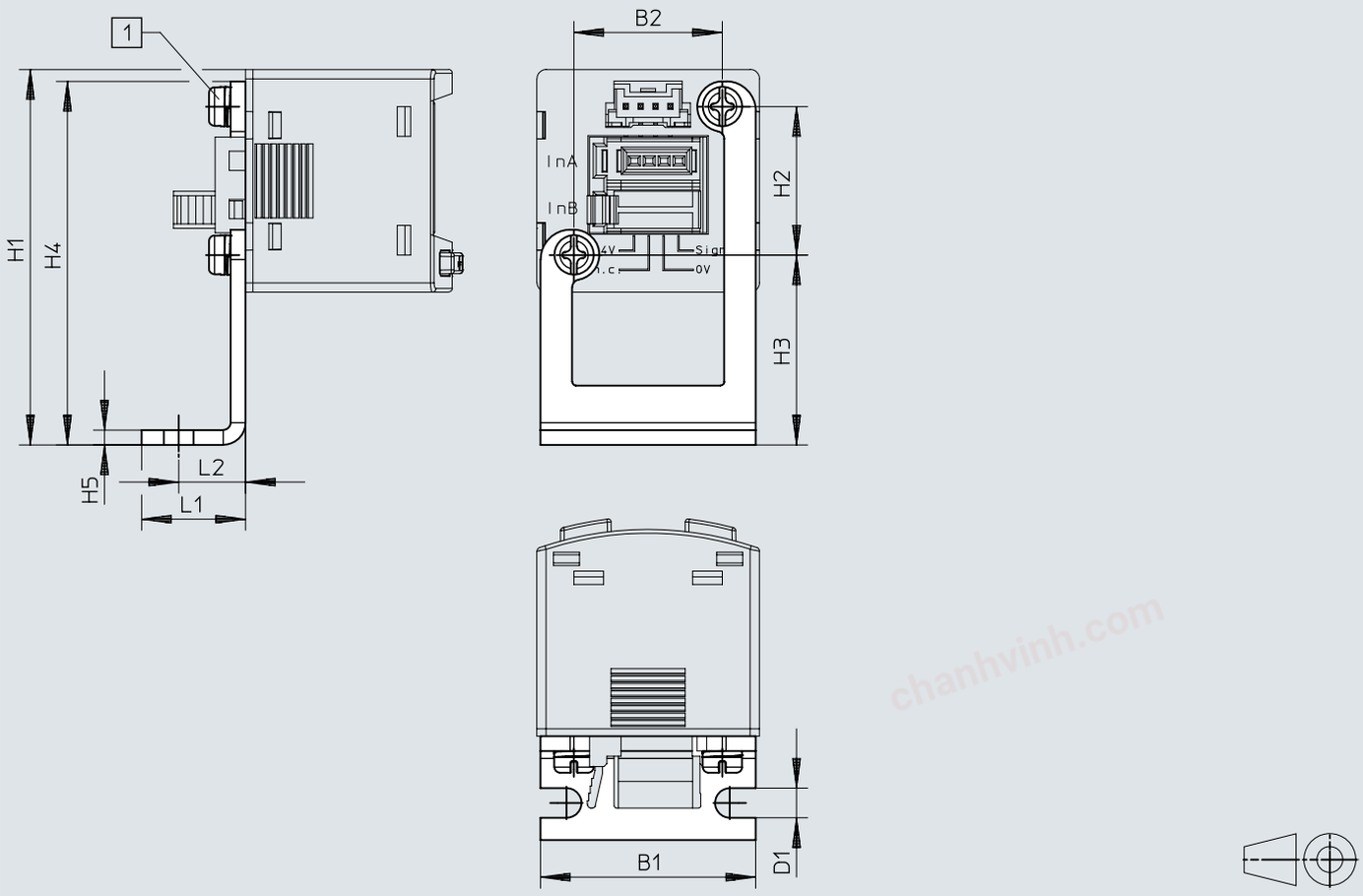

[1] Screws 2x M3

	B1	B2	D1 ø	H1	H2	H3	H4	H5	L1	L2
SAMH-PU-A	29	20	4	50,6	20	25,6	49	2	14	9

chanhvinh.com

Dimensions

Dimensions – Wall mounting SAMH-PN-W Download CAD data www.festo.com

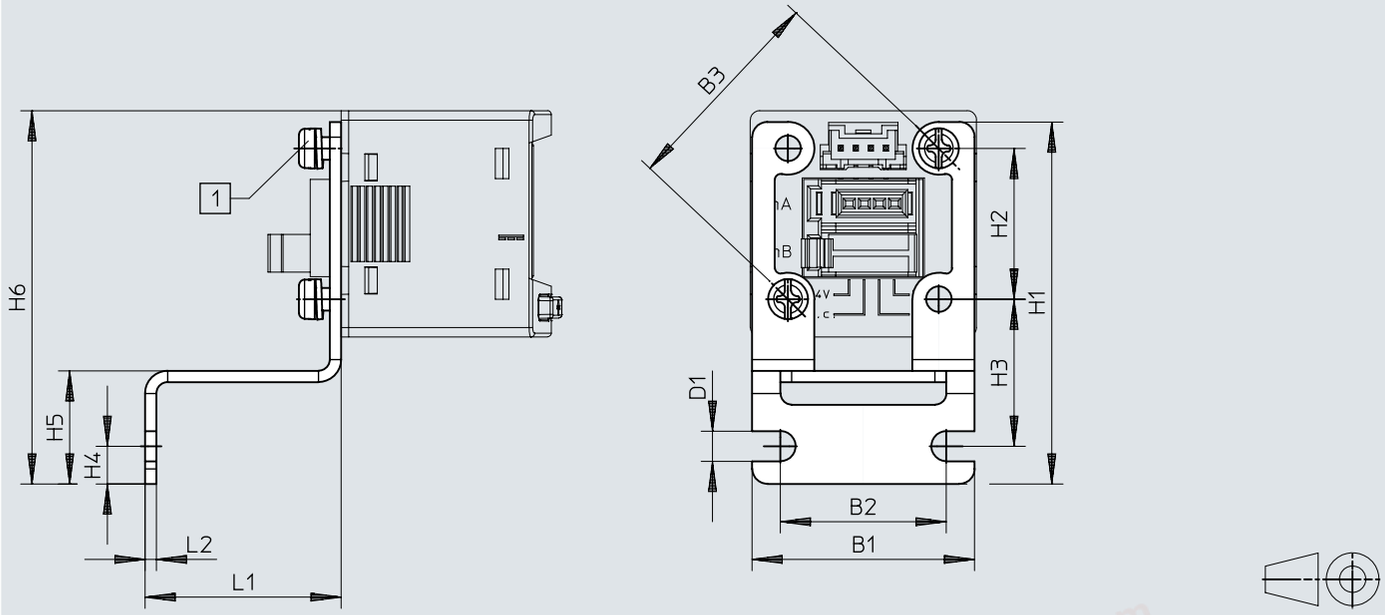

[1] Screws 2x M3

	B1	B2	D1 ⌀	H1	H2	H3	H4	H5	H6	L1	L2
SAMH-PN-W	29,5	22	4	48	20	19,5	5	15	49,5	26	1,5

chanhvinh.com

Dimensions

Dimensions – Front panel mounting kit SAMH-PN-F Download CAD data www.festo.com

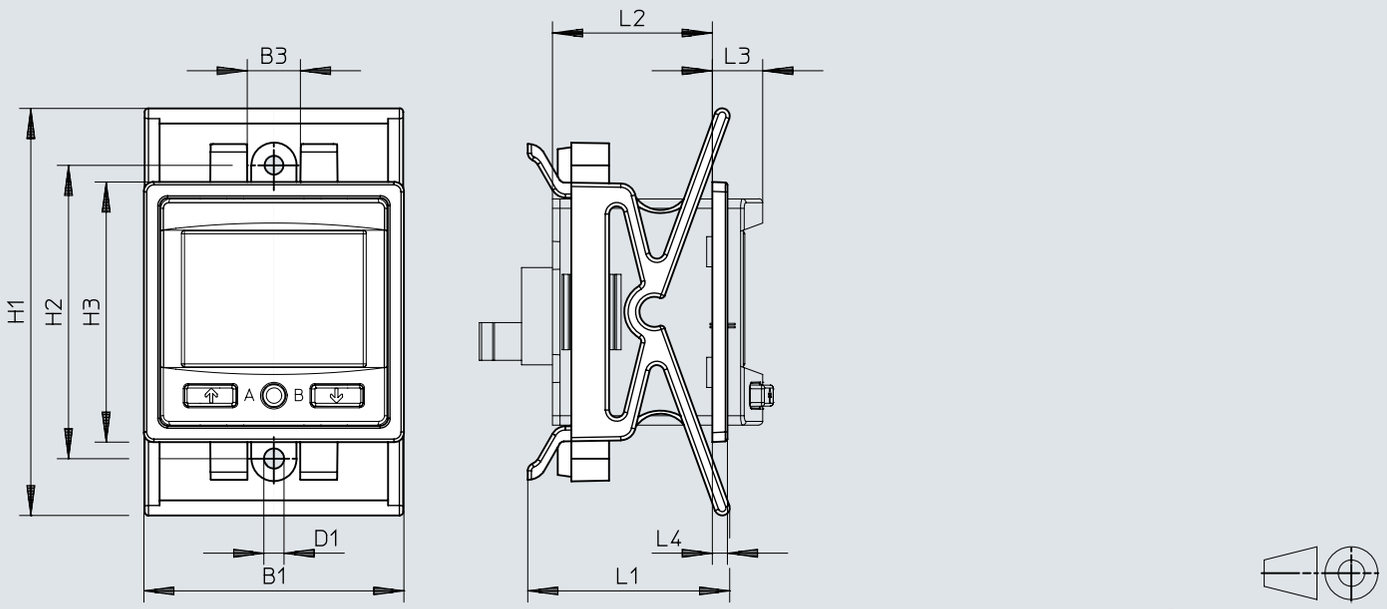

	B1	B3	D1	H1		H2	H3	L1	L2	L3	L4
			ø	min.	max.						
SAMH-PN-F	34,5	7	2,5	54	57,5	38,9	34,5	26,8	~21,2	~6,7	2

chanhvinh.com

Dimensions

Dimensions – Protective hood SACC-PN-G Download CAD data www.festo.com

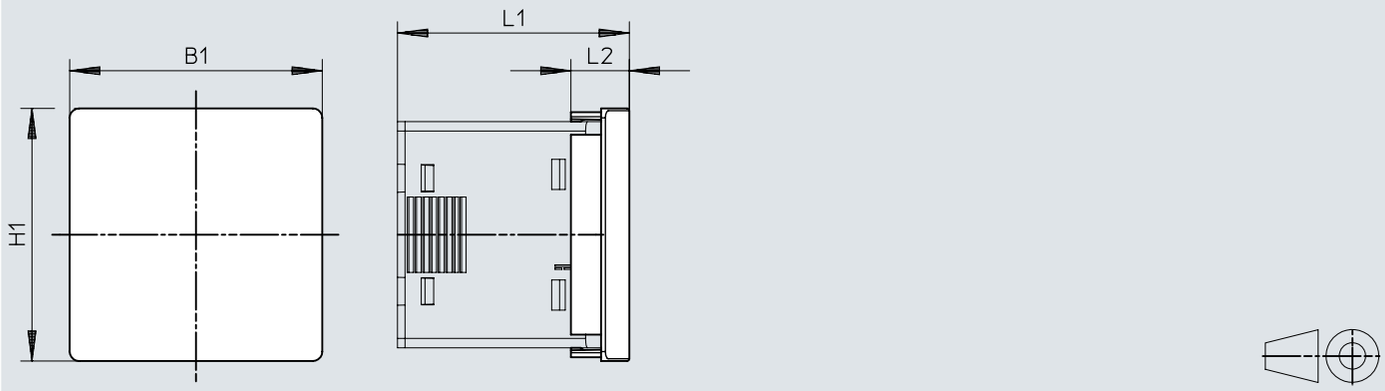

	B1	H1	L1	L2
SACC-PN-G	33,5	33,5	~31	7,7

chanhvinh.com

Ordering data

Ordering data

	Measured variable	Part no.	Type
	Voltage	**8035555**	**SCDN-2V-EC4-PNLK-L1**
	Current	**8035556**	**SCDN-2A-EC4-PNLK-L1**

chanhvinh.com

chanhvinh.com

Peripherals

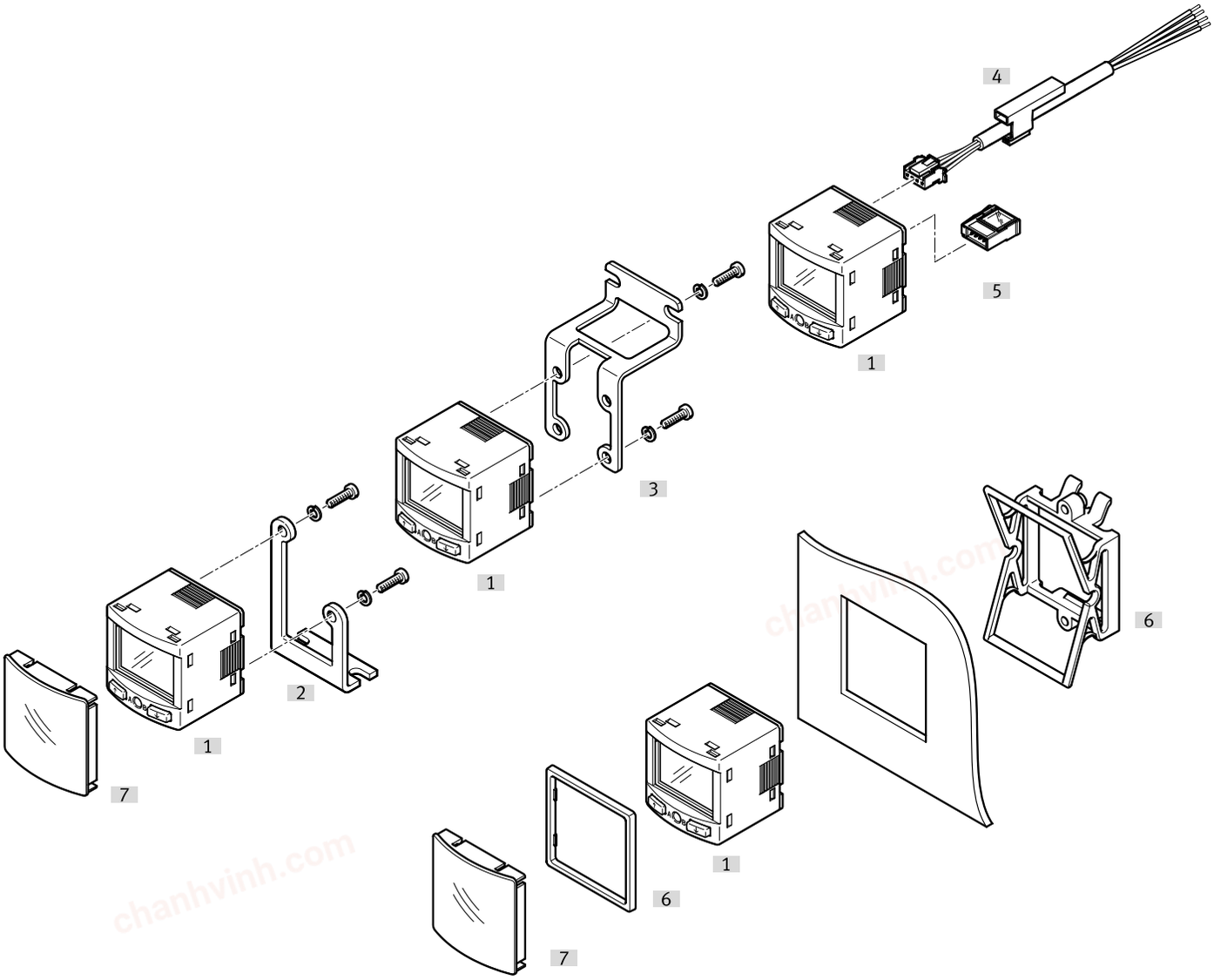

Accessories			→ Link
	Type/order code	Description	
[1]	Signal converter SCDN	–	scdn
[2]	Mounting bracket SAMH-PU-A	With through-hole and screws	14
[3]	Wall mounting SAMH-PN-W	With through-hole and screws	14
[4]	Connecting cables NEBS-L1G4-...	–	14
[5]	Plug NECU-...	Latching	14
[6]	Protective hood SACC-PN-G	Latching	14
[7]	Front panel mounting kit SAMH-PN-F	–	14

chanhvinh.com

Accessories

Mounting bracket SAMH-PU-A

	Type of mounting	Information on materials	Corrosion resistance class CRC [1]	Part no.	Type
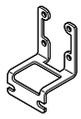	Via through-hole and screw	High-alloy stainless steel	2 - Moderate corrosion stress	**8003354**	**SAMH-PU-A**

1) More information www.festo.com/x/topic/crc

Wall mounting SAMH-PN-W

	Type of mounting	Part no.	Type
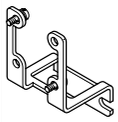	Via through-hole and screw	**8035563**	**SAMH-PN-W**

Front panel mounting kit SAMH-PN-F

	Type of mounting	Part no.	Type
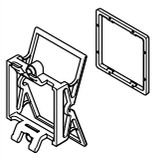	Front panel mounting	**8035561**	**SAMH-PN-F**

Protective hood SACC-PN-G

	Type of mounting	Part no.	Type
	Snapping in	**8035560**	**SACC-PN-G**

Connecting cables, socket, rectangular design L1

	Electrical connection 1, number of connections/cores	Cable length	Part no.	Type
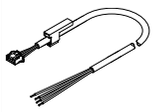	4	1 m	**8091514**	**NEBS-L1G4-K-1-N-M12G4**
		2.5 m	**572576**	**NEBS-L1G4-K-2.5-LE4**
		5 m	**572577**	**NEBS-L1G4-K-5-LE4**

Plug NECU-S-ECG4-HX-Q3

	Type of mounting	Operational voltage range DC	Electrical connection	Part no.	Type
	Snapping in	0 ... 30 V	4-pin, Straight plug/insulation displacement connector, Square design	**570922**	**NECU-S-ECG4-HX-Q3**