chanhvinh.com

# Multiple distributor QSLV, QST, QSQ



chanhvinh.com



# Characteristics

## At a glance

Rotatable compressed air branches in the riser pipe principle. With single outlets.

## Additional documents

Link qs-v

The additional document PUSH-IN-FITTINGS-ADD contains further information on tubing/fitting combinations and thread types, as well as installation instructions.

## Series

[QSQ] Multiple distributor, straight form, 4 outlets QSQ

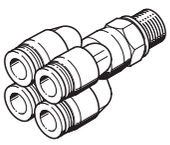

[QSLV2] Multiple distributor, L-shape, 2 outlets QSLV2

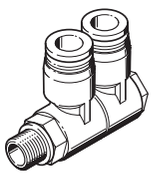

[QSLV3] Multiple distributor, L-shape, 3 outlets QSLV3

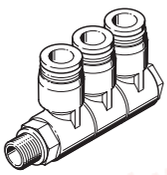

[QSLV4] Multiple distributor, L-shape, 4 outlets QSLV4

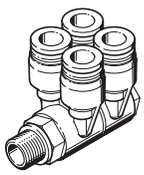

[QSLV6] Multiple distributor, L-shape, 6 outlets QSLV6

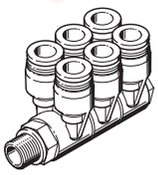

[QST3] Multiple distributor, T-shape, 3 outlets QST3

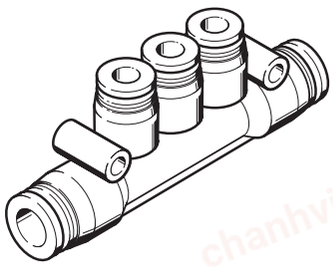

[QSYTF] Multiple distributor QSYTF

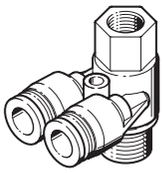

chanhvinh.com



## Type code

| 001 | Series | |
|---|---|---|
| **QSLV2** | Multiple distributor, L-shape, 2 outlets QSLV2 | |
| **QSLV3** | Multiple distributor, L-shape, 3 outlets QSLV3 | |
| **QSLV4** | Multiple distributor, L-shape, 4 outlets QSLV4 | |
| **QSLV6** | Multiple distributor, L-shape, 6 outlets QSLV6 | |
| **QST3** | Multiple distributor, T-shape, 3 outlets QST3 | |
| **QSQ** | Multiple distributor, straight form, 4 outlets QSQ | |

| 002 | Pneumatic connection 1 | |
|---|---|---|
| **1/8** | Male thread R1/8 | |
| **1/4** | Male thread R1/4 | |
| **3/8** | Male thread R3/8 | |
| **1/2** | Male thread R1/2 | |
| **6** | Push-in connector 6 mm | |
| **8** | Push-in connector 8 mm | |
| **10** | Push-in connector 10 mm | |
| **G1/8** | Male thread G1/8 | |
| **G1/4** | Male thread G1/4 | |
| **G3/8** | Male thread G3/8 | |
| **G1/2** | Male thread G1/2 | |

| 003 | Pneumatic connection 2 | |
|---|---|---|
| **4** | Push-in connector 4 mm | |
| **6** | Push-in connector 6 mm | |
| **8** | Push-in connector 8 mm | |
| **10** | Push-in connector 10 mm | |
| **12** | Push-in connector 12 mm | |

| 004 | System of units | |
|---|---|---|
| | Metric | |

chanhvinh.com



# Datasheet

## General technical data

| | |
|---|---|
| Size | Standard |
| Design | Push-pull principle |
| Mounting position | Any |
| Type of seal on screwed plug[1)] | Coating, Sealing ring |
| Size of pack | 1 |

1) Sealing ring (G thread), coating (R thread)

## Operating and environmental conditions

| | |
|---|---|
| Operating pressure complete temperature range | -0.95 ... 6 bar |
| Temperature-dependent operating pressure | -0.95 ... 14 bar |
| Operating medium | Compressed air to ISO 8573-1:2010 [7:-:-]<br>Water (liquid, ice-free) |
| Note on operating and pilot medium | Lubricated operation possible, Water: G-thread only possible with sealing ring type OL as additional accessory |
| Ambient temperature | -10 ... 80°C |
| Corrosion resistance class CRC [1)] | 1 - Low corrosion stress |
| Maritime classification [2)] | See certificate |

1) More information www.festo.com/x/topic/crc

2) More information www.festo.com/catalogue/qs → Support/Downloads

## Operating pressure p as a function of temperature t

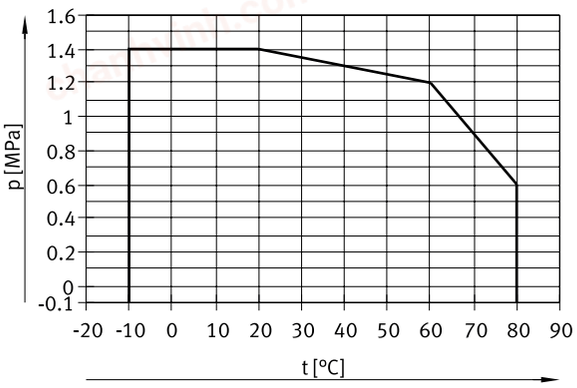


## Materials

| | |
|---|---|
| Material housing | PBT |
| Material release ring | POM |
| Material tubing seal | NBR |
| Material tubing clamp component | High-alloy stainless steel |
| Material hollow bolt [1)] | Brass, nickel-plated |
| Note on materials | RoHS compliant |
| LABS (PWIS) conformity | VDMA24364-B1/B2-L |

1) QSLV

## Tightening torques

| Pneumatic connection, port 1 | Male thread G1/8 | Male thread G1/4 | Male thread G3/8 | Male thread G1/2 | Male thread R1/8 | Male thread R1/4 | Male thread R3/8 | Male thread R1/2 |
|---|---|---|---|---|---|---|---|---|
| Nominal torque | 5.4 ... 7 Nm | 9 Nm | 15.5 Nm | 26 Nm | 7 Nm | 9 Nm | 15.5 Nm | 26 Nm |
| Tolerance for nominal tightening torque | ±20% | | | | | | | |

chanhvinh.com



## Datasheet

| Tubing insertion depth | | | | | |
|---|---|---|---|---|---|
| Pneumatic connection, port 2 | For tubing outside diameter of 4 mm | For tubing outside diameter of 6 mm | For tubing outside diameter of 8 mm | For tubing outside diameter of 10 mm | For tubing outer diameter of 12 mm |
| Tubing insertion depth | 14.9 mm | 17 mm | 18.1 mm | 20.2 mm | 23.4 mm |

chanhvinh.com



## Dimensions

**Dimensions – Multiple distributor QSQ, R thread** Download CAD data www.festo.com

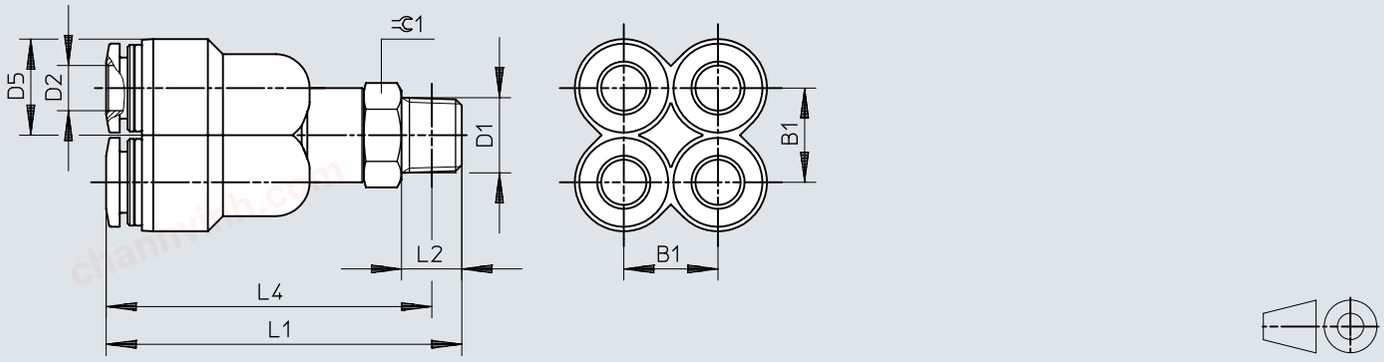


| | D1 | D2 | B1 | D5<br>ø | L1 | L2 | L4 | ⊂ |
|---|---|---|---|---|---|---|---|---|
| QSQ-1/8-4 | R1/8 | 4 | 10,3 | 10,5 | 38,9 | 8 | 34,9 | 12 |
| QSQ-1/8-6 | | 6 | 12,5 | 13 | 47,2 | 8 | 43,2 | 12 |
| QSQ-1/4-4 | R1/4 | 4 | 10,3 | 10,5 | 42,4 | 11 | 36,4 | 14 |
| QSQ-1/4-6 | | 6 | 12,5 | 13 | 50,7 | 11 | 44,7 | 14 |

chanhvinh.com



# Dimensions

**Dimensions – Multiple distributor QSQ, G thread with sealing ring** Download CAD data www.festo.com

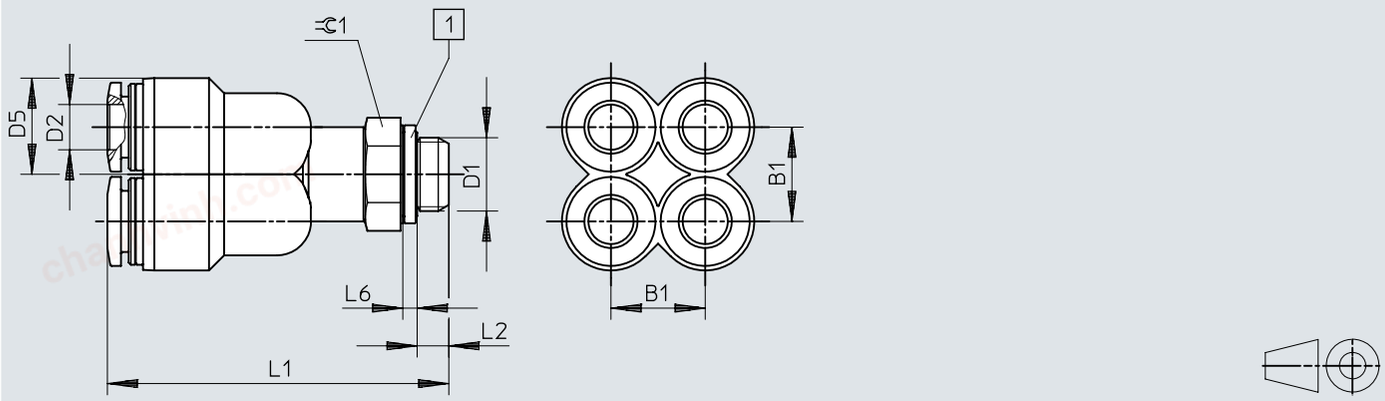


[1] Sealing ring

| | D1 | D2 | B1 | D5<br>ø | L1 | L2 | L6 | ⊂ |
|---|---|---|---|---|---|---|---|---|
| QSQ-G1/8-4 | R1/8 | 4 | 10,3 | 10,5 | 37 | 4,2 | 1,9 | 13 |
| QSQ-G1/8-6 | | 6 | 12,5 | 13 | 45,3 | 4,2 | 1,9 | 13 |
| QSQ-G1/4-4 | R1/4 | 4 | 10,3 | 10,5 | 39,1 | 4,8 | 1,9 | 17 |
| QSQ-G1/4-6 | | 6 | 12,5 | 13 | 47,4 | 4,8 | 1,9 | 17 |

chanhvinh.com



## Dimensions

**Dimensions – Multiple distributor QSQ, reducing** Download CAD data www.festo.com

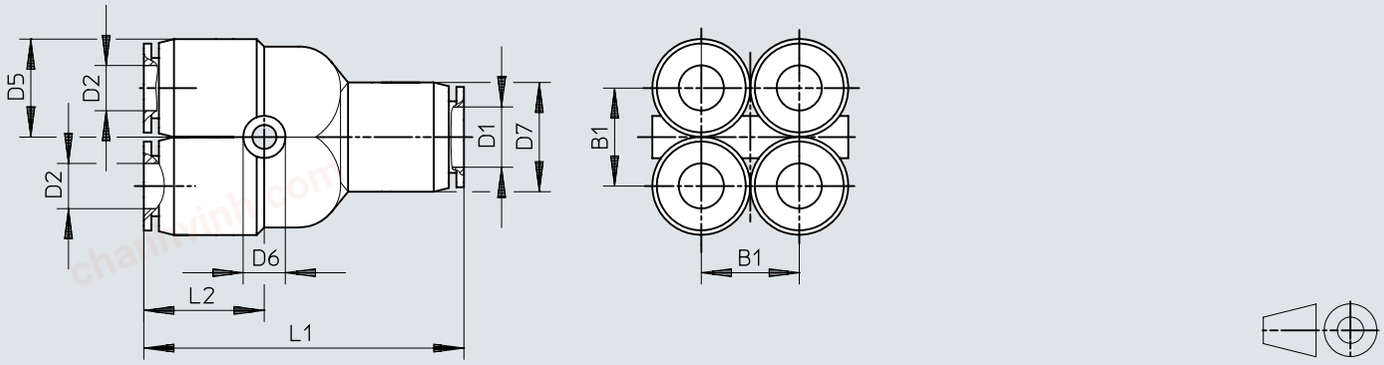


| | D1 | D2 | B1 | D5<br>ø | D6<br>ø | D7<br>ø | L1 | L2 |
|---|---|---|---|---|---|---|---|---|
| QSQ-6-4 | 6 | 4 | 10,3 | 10,5 | 3,2 | 12,5 | 37,5 | 14,2 |
| QSQ-8-6 | 8 | 6 | 12,5 | 13 | 3,2 | 14,5 | 42 | 15,8 |

chanhvinh.com



# Dimensions

**Dimensions – Multiple distributor QSLV2, R thread** Download CAD data www.festo.com

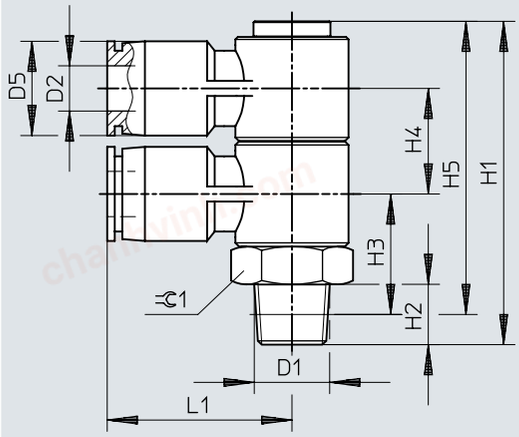


| | D1 | D2 | D5 ø | H1 | H2 | H3 | H4 | H5 | L1 | ⫧1 |
|---|---|---|---|---|---|---|---|---|---|---|
| QSLV2-1/8-4 | R1/8 | 4 | 10 | 41,6 | 8 | 15,5 | 13 | 37,6 | 22,2 | 14 |
| QSLV2-1/8-6 | | 6 | 12,5 | 41,6 | 8 | 15,5 | 13 | 37,6 | 24,2 | 14 |
| QSLV2-1/8-8 | | 8 | 14,5 | 46,6 | 8 | 17,5 | 15 | 42,6 | 27,7 | 17 |
| QSLV2-1/4-6 | R1/4 | 6 | 12,5 | 44,6 | 11 | 16,5 | 13 | 38,6 | 24,2 | 14 |
| QSLV2-1/4-8 | | 8 | 14,5 | 49,6 | 11 | 18,5 | 15 | 43,6 | 27,7 | 17 |
| QSLV2-1/4-10 | | 10 | 17,5 | 57,6 | 11 | 22 | 18 | 51,6 | 31,7 | 22 |
| QSLV2-3/8-8 | R3/8 | 8 | 14,5 | 50,6 | 12 | 19,2 | 15 | 44,3 | 27,7 | 17 |
| QSLV2-3/8-10 | | 10 | 17,5 | 58,6 | 12 | 22,7 | 18 | 52,3 | 31,7 | 22 |
| QSLV2-3/8-12 | | 12 | 21 | 68,8 | 12 | 27,5 | 21,6 | 62,5 | 36,7 | 27 |
| QSLV2-1/2-12 | R1/2 | 12 | 21 | 71,8 | 15 | 28,6 | 21,6 | 63,6 | 36,7 | 27 |

## Dimensions

**Dimensions – Multiple distributor QSLV2, G thread with sealing ring**

Download CAD data www.festo.com

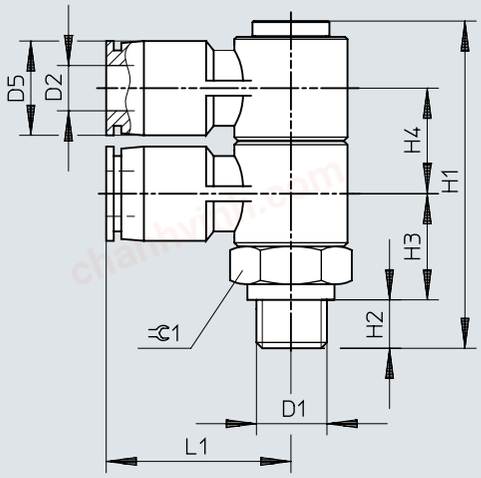


| | D1 | D2 | D5 ø | H1 | H2 | H3 | H4 | L1 | ⬡1 |
|---|---|---|---|---|---|---|---|---|---|
| QSLV2-G1/8-4 | G1/8 | 4 | 10 | 40,6 | 5,1 | 13,4 | 13 | 22,2 | 14 |
| QSLV2-G1/8-6 | | 6 | 12,5 | 40,6 | 5,1 | 13,4 | 13 | 24,2 | 14 |
| QSLV2-G1/8-8 | | 8 | 14,5 | 45,6 | 5,1 | 15,4 | 15 | 27,7 | 17 |
| QSLV2-G1/4-6 | G1/4 | 6 | 12,5 | 42,1 | 5,6 | 14,4 | 13 | 24,2 | 17 |
| QSLV2-G1/4-8 | | 8 | 14,5 | 46,1 | 5,6 | 15,4 | 15 | 27,7 | 17 |
| QSLV2-G1/4-10 | | 10 | 17,5 | 54,1 | 5,6 | 18,9 | 18 | 31,7 | 22 |
| QSLV2-G3/8-8 | G3/8 | 8 | 14,5 | 47,6 | 6,6 | 15,9 | 15 | 27,7 | 19 |
| QSLV2-G3/8-10 | | 10 | 17,5 | 55,6 | 6,6 | 19,4 | 18 | 31,7 | 22 |
| QSLV2-G3/8-12 | | 12 | 21 | 65,8 | 6,6 | 24,2 | 21,6 | 36,7 | 27 |
| QSLV2-G1/2-12 | G1/2 | 12 | 21 | 66,8 | 7,6 | 24,2 | 21,6 | 36,7 | 27 |

chanhvinh.com



## Dimensions

**Dimensions – Multiple distributor QSLV3, R thread** Download CAD data www.festo.com

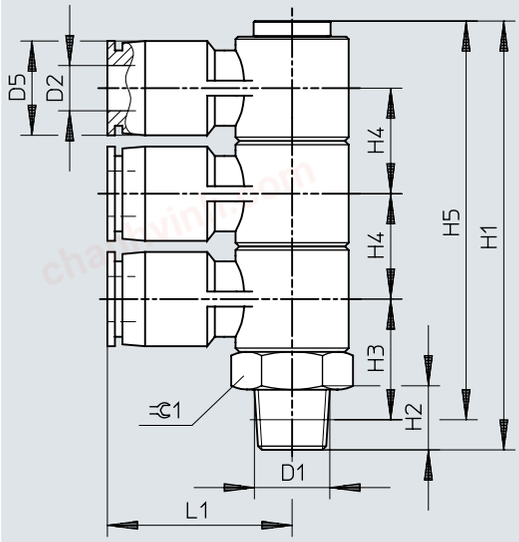


| | D1 | D2 | D5<br>ø | H1 | H2 | H3 | H4 | H5 | L1 | ⫧C1 |
|---|---|---|---|---|---|---|---|---|---|---|
| QSLV3-1/8-4 | R1/8 | 4 | 10 | 54,7 | 8 | 15,5 | 13 | 50,7 | 22,2 | 14 |
| QSLV3-1/8-6 | | 6 | 12,5 | 54,7 | 8 | 15,5 | 13 | 50,7 | 24,2 | 14 |
| QSLV3-1/8-8 | | 8 | 14,5 | 61,7 | 8 | 17,5 | 15 | 57,7 | 27,7 | 17 |
| QSLV3-1/4-6 | R1/4 | 6 | 12,5 | 57,7 | 11 | 16,5 | 13 | 51,7 | 24,2 | 14 |
| QSLV3-1/4-8 | | 8 | 14,5 | 64,7 | 11 | 18,5 | 15 | 58,7 | 27,7 | 17 |
| QSLV3-1/4-10 | | 10 | 17,5 | 75,7 | 11 | 22 | 18 | 69,7 | 31,7 | 22 |
| QSLV3-3/8-8 | R3/8 | 8 | 14,5 | 65,7 | 12 | 19,2 | 15 | 59,4 | 27,7 | 17 |
| QSLV3-3/8-10 | | 10 | 17,5 | 76,7 | 12 | 22,7 | 18 | 70,4 | 31,7 | 22 |
| QSLV3-3/8-12 | | 12 | 21 | 90,5 | 12 | 27,5 | 21,6 | 84,2 | 36,7 | 27 |
| QSLV3-1/2-12 | R1/2 | 12 | 21 | 93,5 | 15 | 28,6 | 21,6 | 85,3 | 36,7 | 27 |

## Dimensions

**Dimensions – Multiple distributor QSLV3, G thread with sealing ring** Download CAD data www.festo.com

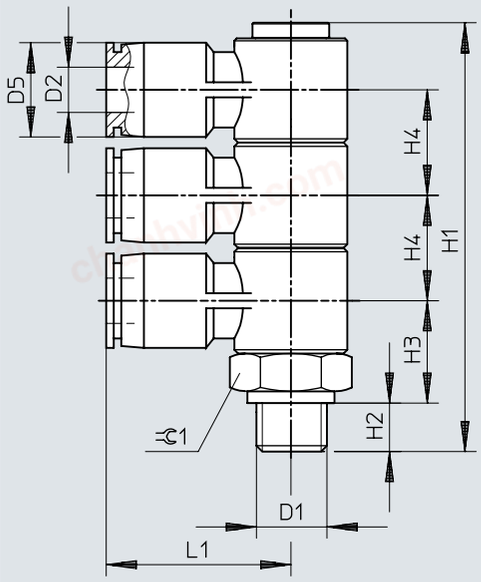


| | D1 | D2 | D5 ø | H1 | H2 | H3 | H4 | L1 | ⫧1 |
|---|---|---|---|---|---|---|---|---|---|
| QSLV3-G1/8-4 | G1/8 | 4 | 10 | 53,7 | 5,1 | 13,4 | 13 | 22,2 | 14 |
| QSLV3-G1/8-6 | | 6 | 12,5 | 53,7 | 5,1 | 13,4 | 13 | 24,2 | 14 |
| QSLV3-G1/8-8 | | 8 | 14,5 | 60,7 | 5,1 | 15,4 | 15 | 27,7 | 17 |
| QSLV3-G1/4-6 | G1/4 | 6 | 12,5 | 55,2 | 5,6 | 14,4 | 13 | 24,2 | 17 |
| QSLV3-G1/4-8 | | 8 | 14,5 | 61,2 | 5,6 | 15,4 | 15 | 27,7 | 17 |
| QSLV3-G1/4-10 | | 10 | 17,5 | 72,2 | 5,6 | 18,9 | 18 | 31,7 | 22 |
| QSLV3-G3/8-8 | G3/8 | 8 | 14,5 | 62,7 | 6,6 | 15,9 | 15 | 27,7 | 19 |
| QSLV3-G3/8-10 | | 10 | 17,5 | 73,3 | 6,6 | 19,4 | 18 | 31,7 | 22 |
| QSLV3-G3/8-12 | | 12 | 21 | 87,5 | 6,6 | 24,2 | 21,6 | 36,7 | 27 |
| QSLV3-G1/2-12 | G1/2 | 12 | 21 | 88,5 | 7,6 | 24,2 | 21,6 | 36,7 | 27 |

chanhvinh.com



# Dimensions

**Dimensions – Multiple distributor QSLV4, R thread**

Download CAD data www.festo.com

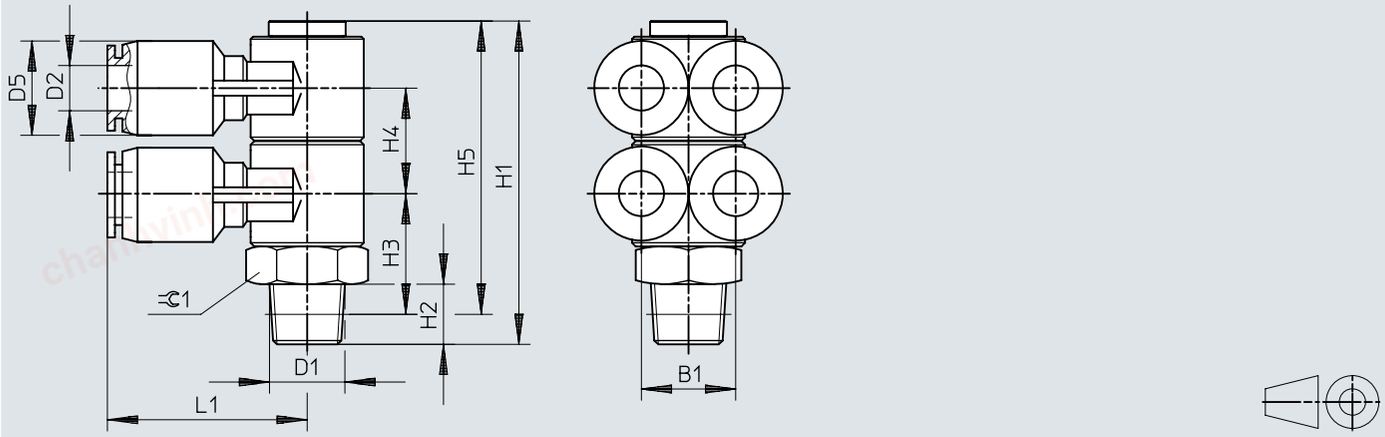


| | D1 | D2 | D5 ø | H1 | H2 | H3 | H4 | H5 | L1 | B1 | ⌀1 |
|---|---|---|---|---|---|---|---|---|---|---|---|
| QSLV4-1/8-4 | R1/8 | 4 | 10 | 41,6 | 8 | 15,5 | 13 | 37,6 | 22,2 | 10 | 14 |
| QSLV4-1/8-6 | | 6 | 12,5 | 41,6 | 8 | 15,5 | 13 | 37,6 | 24,2 | 12 | 14 |
| QSLV4-1/8-8 | | 8 | 14,5 | 46,6 | 8 | 17,5 | 15 | 42,6 | 27,7 | 14 | 17 |
| QSLV4-1/4-6 | R1/4 | 6 | 12,5 | 44,6 | 11 | 16,5 | 13 | 38,6 | 24,2 | 12 | 14 |
| QSLV4-1/4-8 | | 8 | 14,5 | 49,6 | 11 | 18,5 | 15 | 43,6 | 27,7 | 14 | 17 |
| QSLV4-1/4-10 | | 10 | 17,5 | 57,6 | 11 | 22 | 18 | 51,6 | 31,7 | 17 | 22 |
| QSLV4-3/8-8 | R3/8 | 8 | 14,5 | 50,6 | 12 | 19,2 | 15 | 44,3 | 27,7 | 14 | 17 |
| QSLV4-3/8-10 | | 10 | 17,5 | 58,6 | 12 | 22,7 | 18 | 52,3 | 31,7 | 17 | 22 |
| QSLV4-3/8-12 | | 12 | 21 | 68,8 | 12 | 27,5 | 21,6 | 62,5 | 36,7 | 20 | 27 |
| QSLV4-1/2-12 | R1/2 | 12 | 21 | 71,8 | 15 | 28,6 | 21,6 | 63,6 | 36,7 | 20 | 27 |

## Dimensions

**Dimensions – Multiple distributor QSLV4, G thread with sealing ring**

Download CAD data www.festo.com

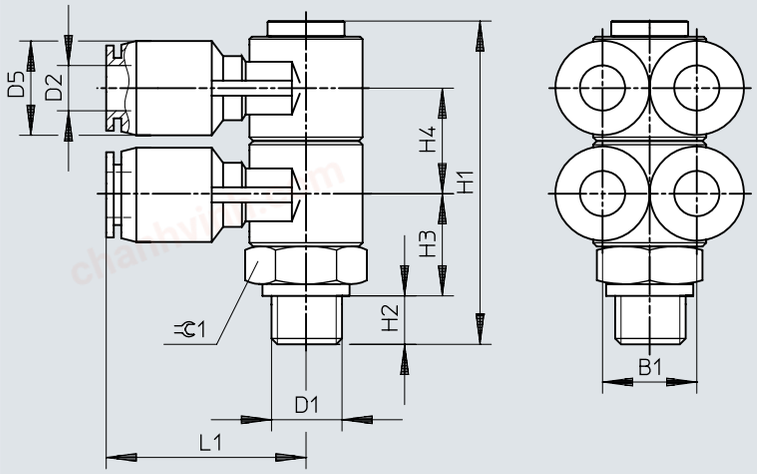


| | D1 | D2 | D5 ø | H1 | H2 | H3 | H4 | L1 | B1 | ⊂1 |
|---|---|---|---|---|---|---|---|---|---|---|
| QSLV4-G1/8-4 | R1/8 | 4 | 10 | 40,6 | 5,1 | 13,4 | 13 | 22,2 | 10 | 14 |
| QSLV4-G1/8-6 | | 6 | 12,5 | 40,6 | 5,1 | 13,4 | 13 | 24,2 | 12 | 14 |
| QSLV4-G1/8-8 | | 8 | 14,5 | 45,6 | 5,1 | 15,4 | 15 | 27,7 | 14 | 17 |
| QSLV4-G1/4-6 | R1/4 | 6 | 12,5 | 42,1 | 5,6 | 14,4 | 13 | 24,2 | 12 | 17 |
| QSLV4-G1/4-8 | | 8 | 14,5 | 46,1 | 5,6 | 15,4 | 15 | 27,7 | 14 | 17 |
| QSLV4-G1/4-10 | | 10 | 17,5 | 54,1 | 5,6 | 18,9 | 18 | 31,7 | 17 | 22 |
| QSLV4-G3/8-8 | R3/8 | 8 | 14,5 | 47,6 | 6,6 | 15,9 | 15 | 27,7 | 14 | 19 |
| QSLV4-G3/8-10 | | 10 | 17,5 | 55,6 | 6,6 | 19,4 | 18 | 31,7 | 17 | 22 |
| QSLV4-G3/8-12 | | 12 | 21 | 65,8 | 6,6 | 24,2 | 21,6 | 36,7 | 20 | 27 |
| QSLV4-G1/2-12 | R1/2 | 12 | 21 | 66,8 | 7,6 | 24,2 | 21,6 | 36,7 | 20 | 27 |

chanhvinh.com



## Dimensions

**Dimensions – Multiple distributor QSLV6, R thread** Download CAD data www.festo.com

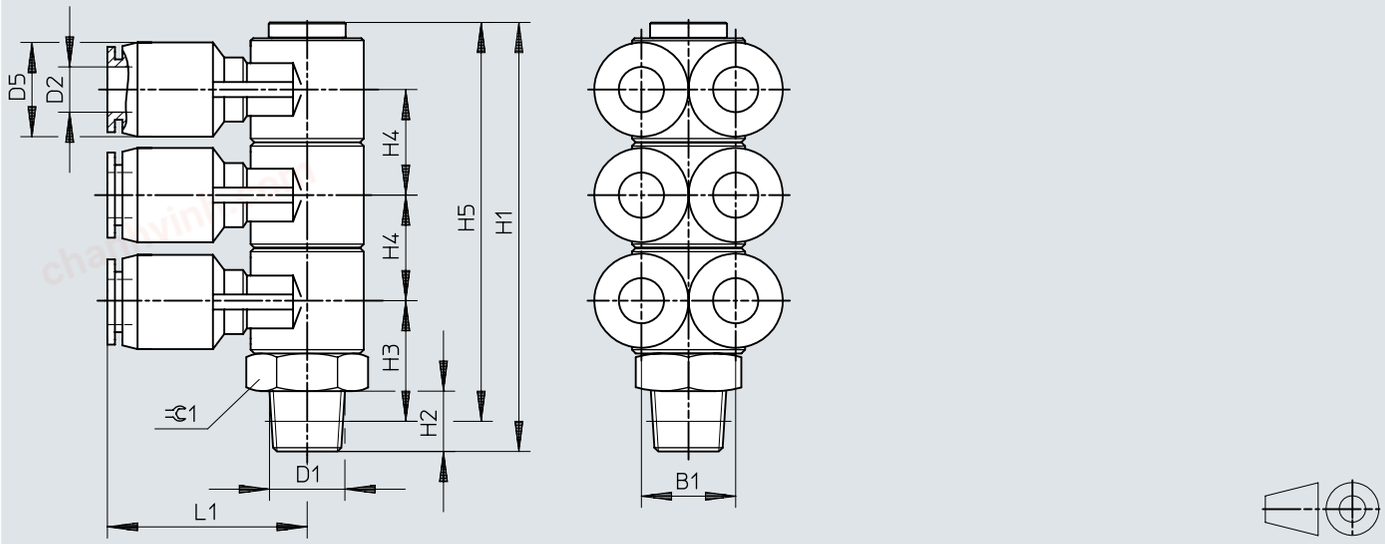


| | D1 | D2 | D5<br>ø | H1 | H2 | H3 | H4 | H5 | L1 | B1 | ⊂1 |
|---|---|---|---|---|---|---|---|---|---|---|---|
| QSLV6-1/8-4 | R1/8 | 4 | 10 | 54,7 | 8 | 15,5 | 13 | 50,7 | 22,2 | 10 | 14 |
| QSLV6-1/8-6 | | 6 | 12,5 | 54,7 | 8 | 15,5 | 13 | 50,7 | 24,2 | 12 | 14 |
| QSLV6-1/8-8 | | 8 | 14,5 | 61,7 | 8 | 17,5 | 15 | 57,7 | 27,7 | 14 | 17 |
| QSLV6-1/4-6 | R1/4 | 6 | 12,5 | 57,7 | 11 | 16,5 | 13 | 51,7 | 24,2 | 12 | 14 |
| QSLV6-1/4-8 | | 8 | 14,5 | 64,7 | 11 | 18,5 | 15 | 58,7 | 27,7 | 14 | 17 |
| QSLV6-1/4-10 | | 10 | 17,5 | 75,7 | 11 | 22 | 18 | 69,7 | 31,7 | 17 | 22 |
| QSLV6-3/8-8 | R3/8 | 8 | 14,5 | 65,7 | 12 | 19,2 | 15 | 59,4 | 27,7 | 14 | 17 |
| QSLV6-3/8-10 | | 10 | 17,5 | 76,7 | 12 | 22,7 | 18 | 70,4 | 31,7 | 17 | 22 |
| QSLV6-3/8-12 | | 12 | 21 | 90,5 | 12 | 27,5 | 21,6 | 84,2 | 36,7 | 20 | 27 |
| QSLV6-1/2-12 | R1/2 | 12 | 21 | 93,5 | 15 | 28,6 | 21,6 | 85,3 | 36,7 | 20 | 27 |

# Dimensions

**Dimensions – Multiple distributor QSLV6, G thread with sealing ring** Download CAD data www.festo.com

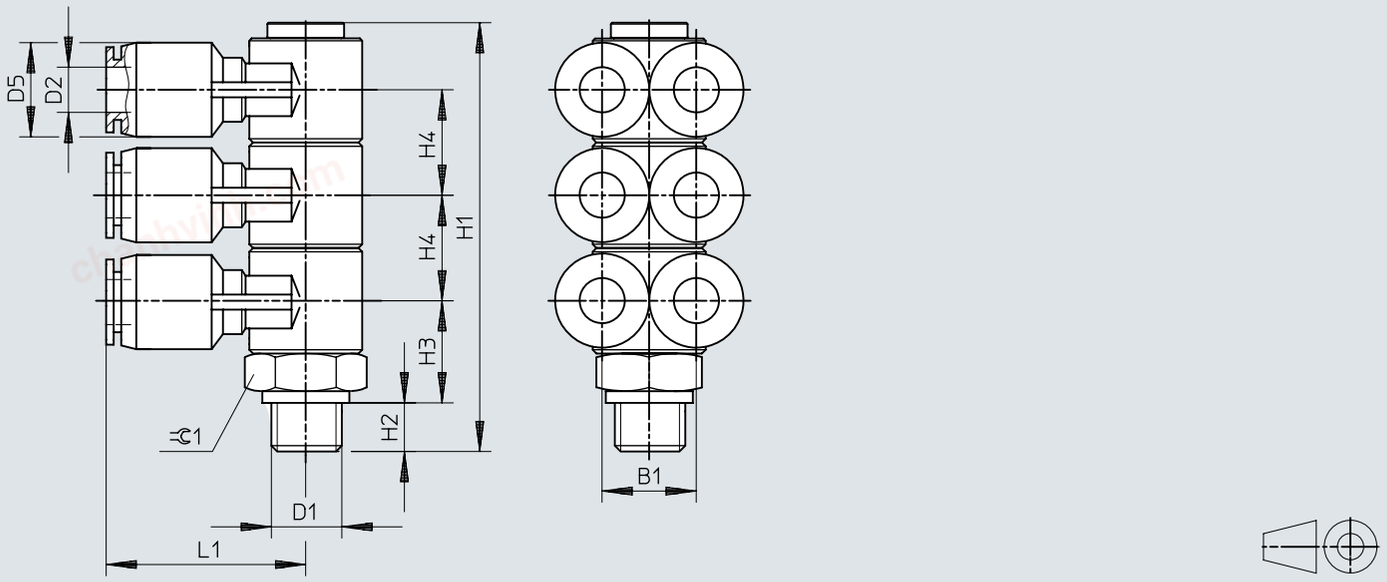


| | D1 | D2 | D5 ø | H1 | H2 | H3 | H4 | L1 | B1 | ⫩C1 |
|---|---|---|---|---|---|---|---|---|---|---|
| QSLV6-G1/8-4 | G1/8 | 4 | 10 | 53,7 | 5,1 | 13,4 | 13 | 22,2 | 10 | 14 |
| QSLV6-G1/8-6 | | 6 | 12,5 | 53,7 | 5,1 | 13,4 | 13 | 24,2 | 12 | 14 |
| QSLV6-G1/8-8 | | 8 | 14,5 | 60,7 | 5,1 | 15,4 | 15 | 27,7 | 14 | 17 |
| QSLV6-G1/4-6 | G1/4 | 6 | 12,5 | 55,2 | 5,6 | 14,4 | 13 | 24,2 | 12 | 17 |
| QSLV6-G1/4-8 | | 8 | 14,5 | 61,2 | 5,6 | 15,4 | 15 | 27,7 | 14 | 17 |
| QSLV6-G1/4-10 | | 10 | 17,5 | 72,2 | 5,6 | 18,9 | 18 | 31,7 | 17 | 22 |
| QSLV6-G3/8-8 | G3/8 | 8 | 14,5 | 62,7 | 6,6 | 15,9 | 15 | 27,7 | 14 | 19 |
| QSLV6-G3/8-10 | | 10 | 17,5 | 73,7 | 6,6 | 19,4 | 18 | 31,7 | 17 | 22 |
| QSLV6-G3/8-12 | | 12 | 21 | 87,5 | 6,6 | 24,2 | 21,6 | 36,7 | 20 | 27 |
| QSLV6-G1/2-12 | G1/2 | 12 | 21 | 88,5 | 7,6 | 24,2 | 21,6 | 36,7 | 20 | 27 |

chanhvinh.com



## Dimensions

**Dimensions – Multiple distributor QST3, R thread** Download CAD data www.festo.com

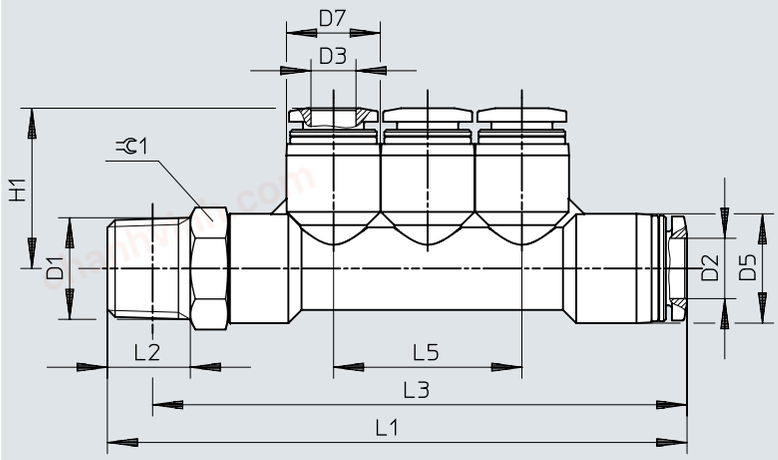


| | D1 | D2 | D3 | D5<br>ø | D7<br>ø | H1 | L1 | L2 | L3 | L5 | ⫧ |
|---|---|---|---|---|---|---|---|---|---|---|---|
| QST3-1/8-6-4 | R1/8 | 6 | 4 | 12,5 | 10 | 18,4 | 65,4 | 8 | 61,4 | 20 | 12 |
| QST3-1/4-8-6 | R1/4 | 8 | 6 | 14,5 | 12,5 | 21,3 | 76,9 | 11 | 70,9 | 25 | 14 |
| QST3-3/8-10-8 | R3/8 | 10 | 8 | 17,5 | 14,5 | 23,7 | 87,8 | 12 | 81,5 | 29 | 17 |

## Dimensions

**Dimensions – Multiple distributor QST3, G thread with sealing ring** Download CAD data www.festo.com

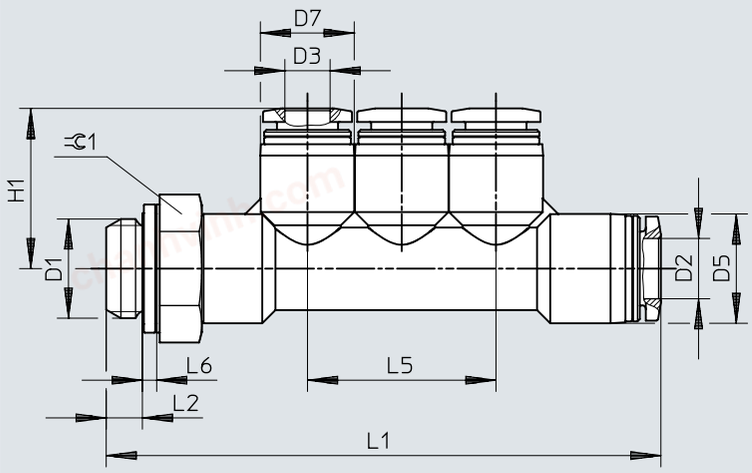


| | D1 | D2 | D3 | D5 ø | D7 ø | H1 | L1 | L2 | L5 | L6 | ⊂ |
|---|---|---|---|---|---|---|---|---|---|---|---|
| QST3-G1/8-6-4 | G1/8 | 6 | 4 | 12,5 | 10 | 18,4 | 63,5 | 4,2 | 20 | 1,9 | 13 |
| QST3-G1/4-8-6 | G1/4 | 8 | 6 | 14,5 | 12,5 | 21,3 | 73,6 | 4,8 | 25 | 1,9 | 17 |
| QST3-G3/8-10-8 | G3/8 | 10 | 8 | 17,5 | 14,5 | 23,7 | 84 | 5,8 | 29 | 2,4 | 19 |

chanhvinh.com



## Dimensions

**Dimensions – Multiple distributor QST3, reducing** Download CAD data www.festo.com

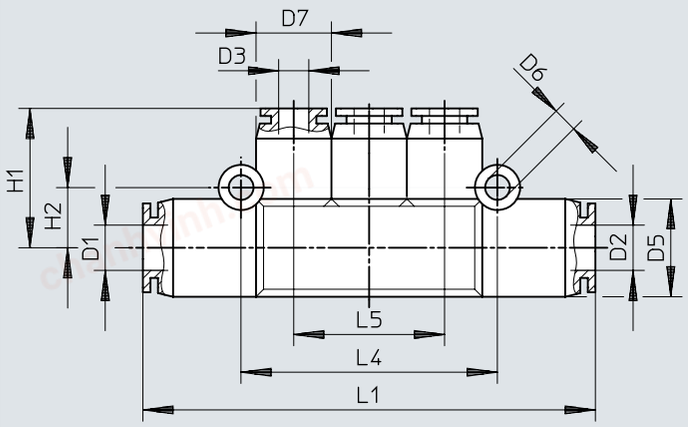


| | D1 | D2 | D3 | D5<br>ø | D6<br>ø | D7<br>ø | H1 | H2 | L1 | L4 | L5 |
|---|---|---|---|---|---|---|---|---|---|---|---|
| QST3-6-4 | 6 | 6 | 4 | 13 | 3,3 | 10 | 18,5 | 8 | 60 | 34 | 20 |
| QST3-8-6 | 8 | 8 | 6 | 15 | 3,3 | 13 | 21 | 9 | 69,5 | 40 | 24 |
| QST3-10-8 | 10 | 10 | 8 | 18 | 3,3 | 15 | 23,5 | 10,5 | 80 | 46 | 28 |

chanhvinh.com



## Dimensions

**Dimensions – Multiple distributor QSYTF, R thread** Download CAD data www.festo.com

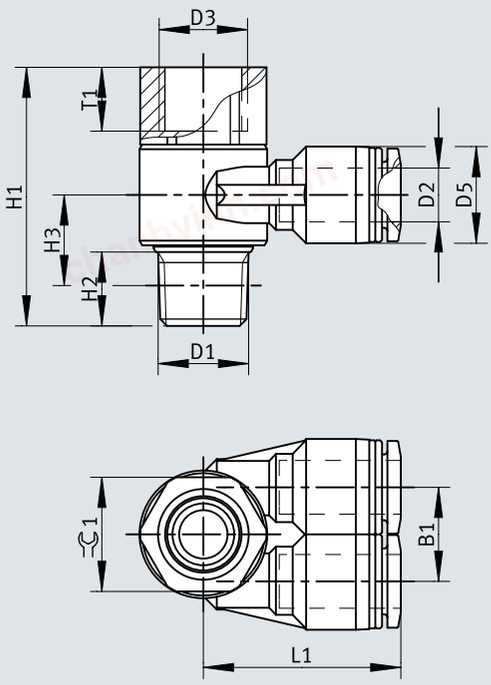


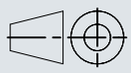

| | D1 | D2 | B1 | D3 ⌀ | D5 ⌀ | D6 ⌀ | H1 | H2 | H3 | H4 | L1 | L2 | ⌀C |
|---|---|---|---|---|---|---|---|---|---|---|---|---|---|
| QSYTF-1/8-6-B | R1/8 | 6 | 12 | G1/8 | 12,4 | 3,5 | 32,5 | 8 | 12 | 7 | 26,2 | 10,7 | 14 |
| QSYTF-1/4-8-B | R1/4 | 8 | 14 | G1/4 | 14,4 | 3,2 | 38,5 | 11 | 13,5 | 9 | 29,1 | 12,5 | 17 |
| QSYTF-3/8-10-B | R3/8 | 10 | 17 | G3/8 | 17,6 | 4,2 | 44,5 | 12 | 15,7 | 11 | 33,5 | 15 | 21 |
| QSYTF-1/2-12-B | R1/2 | 12 | 20 | G1/2 | 21 | 4,2 | 52,2 | 13 | 16,5 | 14 | 37,4 | 17 | 24 |

chanhvinh.com



## Dimensions

**Dimensions – Multiple distributor QSYTF, G thread with sealing ring**

Download CAD data www.festo.com

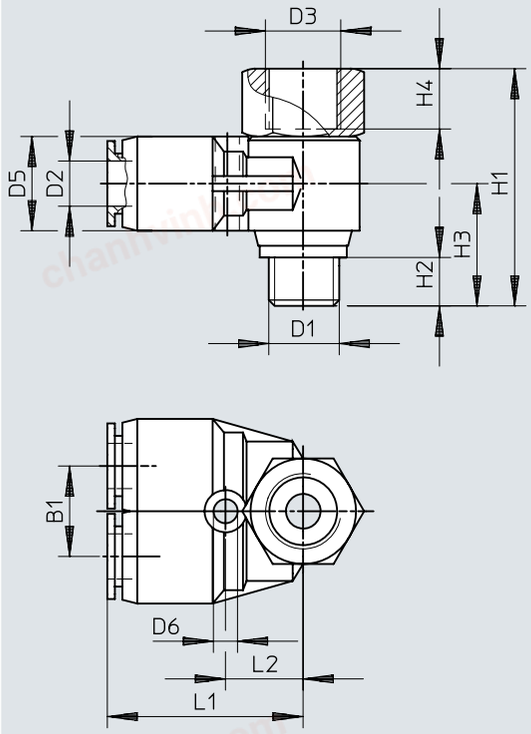




| | D1 | D2 | B1 | D3 ø | D5 ø | D6 ø | H1 | H2 | H3 | H4 | L1 | L2 | ⫰ |
|---|---|---|---|---|---|---|---|---|---|---|---|---|---|
| QSYTF-G1/8-6 | G1/8 | 6 | 12 | G1/8 | 12,4 | 3,2 | 29,2 | 5,1 | 15,2 | 7 | 27,5 | 12 | 17 |
| QSYTF-G1/4-8 | G1/4 | 8 | 14 | G1/4 | 14,4 | 3,2 | 32,9 | 5,6 | 16,4 | 9 | 30,9 | 14 | 19 |
| QSYTF-G3/8-10 | G3/8 | 10 | 17 | G3/8 | 17,6 | 4,2 | 41,4 | 6,6 | 19,4 | 11 | 34 | 15,5 | 21 |
| QSYTF-G1/2-12 | G1/2 | 12 | 20 | G1/2 | 21 | 4,2 | 47,4 | 7,6 | 21,9 | 14 | 38,9 | 18,5 | 27 |

chanhvinh.com



# Ordering data

**Multiple distributor QSQ**

| | Pneumatic connection, port 1 | Pneumatic connection, port 2 | Nominal size | Product weight | Part no. | Type |
|---|---|---|---|---|---|---|
|  | Male thread G1/8 | For tubing outside diameter of 4 mm | 2.6 mm | 20 g | **186220** | **QSQ-G1/8-4** |
| | | For tubing outside diameter of 6 mm | 5.2 mm | 26 g | **186222** | **QSQ-G1/8-6** |
| | Male thread G1/4 | For tubing outside diameter of 4 mm | 2.6 mm | 29 g | **186221** | **QSQ-G1/4-4** |
| | | For tubing outside diameter of 6 mm | 5.2 mm | 35 g | **186263** | **QSQ-G1/4-6** |
| | Male thread R1/8 | For tubing outside diameter of 4 mm | 2.6 mm | 16 g | **153206** | **QSQ-1/8-4** |
| | | For tubing outside diameter of 6 mm | 5.2 mm | 25 g | **153208** | **QSQ-1/8-6** |
| | Male thread R1/4 | For tubing outside diameter of 4 mm | 2.6 mm | 21 g | **153207** | **QSQ-1/4-4** |
| | | For tubing outside diameter of 6 mm | 5.2 mm | 30 g | **153288** | **QSQ-1/4-6** |
| | For tubing outside diameter of 6 mm | For tubing outside diameter of 4 mm | 3.1 mm | 14 g | **153209** | **QSQ-6-4** |
| | For tubing outer diameter of 8 mm | For tubing outside diameter of 6 mm | 4.6 mm | 21 g | **153210** | **QSQ-8-6** |

**Multiple distributor QSLV2**

| | Pneumatic connection, port 1 | Pneumatic connection, port 2 | Nominal size | Product weight | Part no. | Type |
|---|---|---|---|---|---|---|
|  | Male thread G1/8 | For tubing outside diameter of 4 mm | 2.4 mm | 25 g | **186223** | **QSLV2-G1/8-4** |
| | | For tubing outside diameter of 6 mm | 3.2 mm | 27 g | **186224** | **QSLV2-G1/8-6** |
| | | For tubing outside diameter of 8 mm | 4.2 mm | 43 g | **186226** | **QSLV2-G1/8-8** |
| | Male thread G1/4 | For tubing outside diameter of 6 mm | 3.2 mm | 36 g | **186225** | **QSLV2-G1/4-6** |
| | | For tubing outside diameter of 8 mm | 4.3 mm | 44 g | **186227** | **QSLV2-G1/4-8** |
| | | For tubing outside diameter of 10 mm | 5.2 mm | 77 g | **186229** | **QSLV2-G1/4-10** |
| | Male thread G3/8 | For tubing outside diameter of 8 mm | 4.3 mm | 53 g | **186228** | **QSLV2-G3/8-8** |
| | | For tubing outside diameter of 10 mm | 5.3 mm | 79 g | **186230** | **QSLV2-G3/8-10** |

chanhvinh.com



# Ordering data

**Multiple distributor QSLV2**

| | Pneumatic connection, port 1 | Pneumatic connection, port 2 | Nominal size | Product weight | Part no. | Type |
|---|---|---|---|---|---|---|
|  | Male thread G3/8 | For tubing outer diameter of 12 mm | 6.3 mm | 135 g | **186231** | **QSLV2-G3/8-12** |
| | Male thread G1/2 | | 6.4 mm | 140 g | **186232** | **QSLV2-G1/2-12** |
| | Male thread R1/8 | For tubing outside diameter of 4 mm | 2.4 mm | 26 g | **153211** | **QSLV2-1/8-4** |
| | | For tubing outside diameter of 6 mm | 3.2 mm | 28 g | **153212** | **QSLV2-1/8-6** |
| | | For tubing outside diameter of 8 mm | 4.2 mm | 44 g | **153214** | **QSLV2-1/8-8** |
| | Male thread R1/4 | For tubing outside diameter of 6 mm | 3.2 mm | 34 g | **153213** | **QSLV2-1/4-6** |
| | | For tubing outside diameter of 8 mm | 4.3 mm | 47 g | **153215** | **QSLV2-1/4-8** |
| | | For tubing outside diameter of 10 mm | 5.2 mm | 80 g | **153217** | **QSLV2-1/4-10** |
| | Male thread R3/8 | For tubing outside diameter of 8 mm | 4.3 mm | 54 g | **153216** | **QSLV2-3/8-8** |
| | | For tubing outside diameter of 10 mm | 5.3 mm | 83 g | **153218** | **QSLV2-3/8-10** |
| | | For tubing outer diameter of 12 | 6.3 mm | 139 g | **153219** | **QSLV2-3/8-12** |
| | Male thread R1/2 | | 6.4 mm | 149 g | **153220** | **QSLV2-1/2-12** |

**Multiple distributor QSLV3**

| | Pneumatic connection, port 1 | Pneumatic connection, port 2 | Nominal size | Product weight | Part no. | Type |
|---|---|---|---|---|---|---|
|  | Male thread G1/8 | For tubing outside diameter of 4 mm | 2.4 mm | 32 g | **186233** | **QSLV3-G1/8-4** |
| | | For tubing outside diameter of 6 mm | 3.2 mm | 35 g | **186234** | **QSLV3-G1/8-6** |
| | | For tubing outside diameter of 8 mm | 4.3 mm | 55 g | **186236** | **QSLV3-G1/8-8** |
| | Male thread G1/4 | For tubing outside diameter of 6 mm | 3.2 mm | 43 g | **186235** | **QSLV3-G1/4-6** |
| | | For tubing outside diameter of 8 mm | 4.2 mm | 56 g | **186237** | **QSLV3-G1/4-8** |
| | | For tubing outside diameter of 10 mm | 5.2 mm | 96 g | **186239** | **QSLV3-G1/4-10** |
| | Male thread G3/8 | For tubing outside diameter of 8 mm | 4.3 mm | 65 g | **186238** | **QSLV3-G3/8-8** |
| | | For tubing outside diameter of 10 mm | 5.3 mm | 98 g | **186240** | **QSLV3-G3/8-10** |

chanhvinh.com



# Ordering data

**Multiple distributor QSLV3**

| | Pneumatic connection, port 1 | Pneumatic connection, port 2 | Nominal size | Product weight | Part no. | Type |
|---|---|---|---|---|---|---|
|  | Male thread G3/8 | For tubing outer diameter of 12 mm | 6.4 mm | 167 g | **186241** | **QSLV3-G3/8-12** |
| | Male thread G1/2 | | 6.5 mm | 171 g | **186242** | **QSLV3-G1/2-12** |
| | Male thread R1/8 | For tubing outside diameter of 4 mm | 2.4 mm | 33 g | **153221** | **QSLV3-1/8-4** |
| | | For tubing outside diameter of 6 mm | 3.2 mm | 35 g | **153222** | **QSLV3-1/8-6** |
| | | For tubing outside diameter of 8 mm | 4.3 mm | 56 g | **153224** | **QSLV3-1/8-8** |
| | Male thread R1/4 | For tubing outside diameter of 6 mm | 3.2 mm | 41 g | **153223** | **QSLV3-1/4-6** |
| | | For tubing outside diameter of 8 mm | 4.2 mm | 59 g | **153225** | **QSLV3-1/4-8** |
| | | For tubing outside diameter of 10 mm | 5.2 mm | 99 g | **153227** | **QSLV3-1/4-10** |
| | Male thread R3/8 | For tubing outside diameter of 8 mm | 4.3 mm | 66 g | **153226** | **QSLV3-3/8-8** |
| | | For tubing outside diameter of 10 mm | 5.3 mm | 102 g | **153228** | **QSLV3-3/8-10** |
| | | For tubing outer diameter of 12 | 6.4 mm | 171 g | **153229** | **QSLV3-3/8-12** |
| | Male thread R1/2 | | 6.5 mm | 180 g | **153230** | **QSLV3-1/2-12** |

**Multiple distributor QSLV4**

| | Pneumatic connection, port 1 | Pneumatic connection, port 2 | Nominal size | Product weight | Part no. | Type |
|---|---|---|---|---|---|---|
|  | Male thread G1/8 | For tubing outside diameter of 4 mm | 2.3 mm | 30 g | **186243** | **QSLV4-G1/8-4** |
| | | For tubing outside diameter of 6 mm | 2.9 mm | 34 g | **186244** | **QSLV4-G1/8-6** |
| | | For tubing outside diameter of 8 mm | 4 mm | 53 g | **186246** | **QSLV4-G1/8-8** |
| | Male thread G1/4 | For tubing outside diameter of 6 mm | 2.9 mm | 42 g | **186245** | **QSLV4-G1/4-6** |
| | | For tubing outside diameter of 8 mm | 4.1 mm | 54 g | **186247** | **QSLV4-G1/4-8** |
| | | For tubing outside diameter of 10 mm | 5 mm | 92 g | **186249** | **QSLV4-G1/4-10** |
| | Male thread G3/8 | For tubing outside diameter of 8 mm | 4.1 mm | 63 g | **186248** | **QSLV4-G3/8-8** |
| | | For tubing outside diameter of 10 mm | 5.1 mm | 94 g | **186250** | **QSLV4-G3/8-10** |

chanhvinh.com



# Ordering data

**Multiple distributor QSLV4**

| | Pneumatic connection, port 1 | Pneumatic connection, port 2 | Nominal size | Product weight | Part no. | Type |
|---|---|---|---|---|---|---|
|  | Male thread G3/8 | For tubing outer diameter of 12 mm | 6 mm | 158 g | **186251** | **QSLV4-G3/8-12** |
| | Male thread G1/2 | | 6.2 mm | 162 g | **186252** | **QSLV4-G1/2-12** |
| | Male thread R1/8 | For tubing outside diameter of 4 mm | 2.3 mm | 31 g | **153231** | **QSLV4-1/8-4** |
| | | For tubing outside diameter of 6 mm | 2.9 mm | 35 g | **153232** | **QSLV4-1/8-6** |
| | | For tubing outside diameter of 8 mm | 4 mm | 54 g | **153234** | **QSLV4-1/8-8** |
| | Male thread R1/4 | For tubing outside diameter of 6 mm | 2.9 mm | 40 g | **153233** | **QSLV4-1/4-6** |
| | | For tubing outside diameter of 8 mm | 4.1 mm | 56 g | **153235** | **QSLV4-1/4-8** |
| | | For tubing outside diameter of 10 mm | 5 mm | 95 g | **153237** | **QSLV4-1/4-10** |
| | Male thread R3/8 | For tubing outside diameter of 8 mm | 4.1 mm | 64 g | **153236** | **QSLV4-3/8-8** |
| | | For tubing outside diameter of 10 mm | 5.1 mm | 98 g | **153238** | **QSLV4-3/8-10** |
| | | For tubing outer diameter of 12 mm | 6 mm | 162 g | **153239** | **QSLV4-3/8-12** |
| | Male thread R1/2 | | 6.2 mm | 171 g | **153240** | **QSLV4-1/2-12** |

**Multiple distributor QSLV6**

| | Pneumatic connection, port 1 | Pneumatic connection, port 2 | Nominal size | Product weight | Part no. | Type |
|---|---|---|---|---|---|---|
|  | Male thread G1/8 | For tubing outside diameter of 4 mm | 2.3 mm | 39 g | **186253** | **QSLV6-G1/8-4** |
| | | For tubing outside diameter of 6 mm | 2.9 mm | 45 g | **186254** | **QSLV6-G1/8-6** |
| | | For tubing outside diameter of 8 mm | 4 mm | 70 g | **186256** | **QSLV6-G1/8-8** |
| | Male thread G1/4 | For tubing outside diameter of 6 mm | 2.9 mm | 53 g | **186255** | **QSLV6-G1/4-6** |
| | | For tubing outside diameter of 8 mm | 4 mm | 71 g | **186257** | **QSLV6-G1/4-8** |
| | | For tubing outside diameter of 10 mm | 5.2 mm | 119 g | **186259** | **QSLV6-G1/4-10** |
| | Male thread G3/8 | For tubing outside diameter of 8 mm | 4.1 mm | 80 g | **186258** | **QSLV6-G3/8-8** |
| | | For tubing outside diameter of 10 mm | 5.2 mm | 122 g | **186260** | **QSLV6-G3/8-10** |

chanhvinh.com



# Ordering data

**Multiple distributor QSLV6**

| | Pneumatic connection, port 1 | Pneumatic connection, port 2 | Nominal size | Product weight | Part no. | Type |
|---|---|---|---|---|---|---|
|  | Male thread G3/8 | For tubing outer diameter of 12 mm | 6.3 mm | 201 g | **186261** | **QSLV6-G3/8-12** |
| | Male thread G1/2 | | | 205 g | **186262** | **QSLV6-G1/2-12** |
| | Male thread R1/8 | For tubing outside diameter of 4 mm | 2.3 mm | 40 g | **153241** | **QSLV6-1/8-4** |
| | | For tubing outside diameter of 6 mm | 2.9 mm | 45 g | **153242** | **QSLV6-1/8-6** |
| | | For tubing outside diameter of 8 mm | 4 mm | 71 g | **153244** | **QSLV6-1/8-8** |
| | Male thread R1/4 | For tubing outside diameter of 6 mm | 2.9 mm | 51 g | **153243** | **QSLV6-1/4-6** |
| | | For tubing outside diameter of 8 mm | 4 mm | 73 g | **153245** | **QSLV6-1/4-8** |
| | | For tubing outside diameter of 10 mm | 5.2 mm | 122 g | **153247** | **QSLV6-1/4-10** |
| | Male thread R3/8 | For tubing outside diameter of 8 mm | 4.1 mm | 81 g | **153246** | **QSLV6-3/8-8** |
| | | For tubing outside diameter of 10 mm | 5.2 mm | 126 g | **153248** | **QSLV6-3/8-10** |
| | | For tubing outer diameter of 12 mm | 6.3 mm | 205 g | **153249** | **QSLV6-3/8-12** |
| | Male thread R1/2 | | | 214 g | **153250** | **QSLV6-1/2-12** |

**Multiple distributor QST3**

| | Pneumatic connection, port 1 | Pneumatic connection, port 2 | Nominal size | Product weight | Part no. | Type |
|---|---|---|---|---|---|---|
|  | Male thread G1/8 | For tubing outside diameter of 4 mm, For tubing outside diameter of 6 mm | 3 mm | 21 g | **186217** | **QST3-G1/8-6-4** |
| | Male thread G1/4 | For tubing outside diameter of 6 mm, For tubing outside diameter of 8 mm | 4.6 mm | 35 g | **186218** | **QST3-G1/4-8-6** |
| | Male thread G3/8 | For tubing outside diameter of 8 mm, For tubing outside diameter of 10 mm | 6.7 mm | 52 g | **186219** | **QST3-G3/8-10-8** |
| | Male thread R1/8 | For tubing outside diameter of 4 mm, For tubing outside diameter of 6 mm | 3 mm | 21 g | **153200** | **QST3-1/8-6-4** |
| | Male thread R1/4 | For tubing outside diameter of 6 mm, For tubing outside diameter of 8 mm | 4.6 mm | 35 g | **153201** | **QST3-1/4-8-6** |

chanhvinh.com



# Ordering data

**Multiple distributor QST3**

| | Pneumatic connection, port 1 | Pneumatic connection, port 2 | Nominal size | Product weight | Part no. | Type |
|---|---|---|---|---|---|---|
|  | Male thread R3/8 | For tubing outside diameter of 8 mm, For tubing outside diameter of 10 mm | 6.7 mm | 50 g | **153202** | **QST3-3/8-10-8** |
| | For tubing outside diameter of 6 mm | For tubing outside diameter of 4 mm | 2.5 mm | 16 g | **153203** | **QST3-6-4** |
| | For tubing outer diameter of 8 mm | For tubing outside diameter of 6 mm | 3.6 mm | 23 g | **153204** | **QST3-8-6** |
| | For tubing outer diameter of 10 mm | For tubing outside diameter of 8 mm | 4.9 mm | 33 g | **153205** | **QST3-10-8** |

**Multiple distributor QSYTF**

| | Pneumatic connection, port 1 | Pneumatic connection, port 2 | Nominal size | Product weight | Part no. | Type |
|---|---|---|---|---|---|---|
|  | Male thread G1/8 | Female thread G1/8, For tubing outside diameter of 6 mm | 3.1 mm | 32 g | **186213** | **QSYTF-G1/8-6** |
| | Male thread G1/4 | Female thread G1/4, For tubing outside diameter of 8 mm | 4.3 mm | 47 g | **186214** | **QSYTF-G1/4-8** |
| | Male thread G3/8 | Female thread G3/8, For tubing outside diameter of 10 mm | 5.5 mm | 72 g | **186215** | **QSYTF-G3/8-10** |
| | Male thread G1/2 | Female thread G1/2, For tubing outer diameter of 12 mm | 6.8 mm | 127 g | **186216** | **QSYTF-G1/2-12** |
| | Male thread R1/8 | Female thread G1/8, For tubing outside diameter of 6 mm | 4.2 mm | 27 g | **153196** | **QSYTF-1/8-6-B** |
| | Male thread R1/4 | Female thread G1/4, For tubing outside diameter of 8 mm | 6 mm | 44 g | **153197** | **QSYTF-1/4-8-B** |
| | Male thread R3/8 | Female thread G3/8, For tubing outside diameter of 10 mm | 8 mm | 73 g | **153198** | **QSYTF-3/8-10-B** |
| | Male thread R1/2 | Female thread G1/2, For tubing outer diameter of 12 mm | 10 mm | 110 g | **153199** | **QSYTF-1/2-12-B** |