chanhvinh.com

Connecting cable NEBA

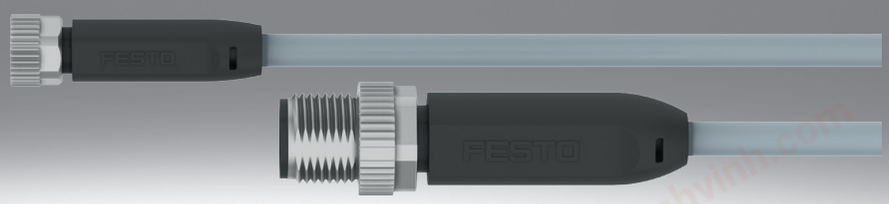

chanhvinh.com

Characteristics

At a glance

Powerful universal connecting cables for applications that are in constant motion or under vibration load with the following technical features:

- One cable quality for different types of installation (static, energy chain, robotics) and suitable for harsh environments as well as applications that are in constant motion or subject to vibration
- Electrical connection complies with EN 61076-2-101 or EN 61076-2-104
- Meets the safety requirements of IEC 61010-1 and IEC 61010-2-202 for electrical equipment for measurement, control and laboratory devices
- High degree of protection, IP65, IP68, IP69k
- Resistant to abrasion and adhesion-free
- Resistant to oil, coolants, lubricants, hydrolysis, microbes, ultraviolet light and ozone
- Flame-retardant, self-extinguishing
- Screw-type lock with longitudinal knurl and hexagon for easier assembly, or diameter 8 mm with snap-locking

Ordering data - modular system

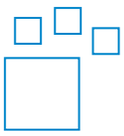

Configurable product
This product and all its product options can be ordered online via the configurator.

chanhvinh.com

Type code

001	Series	
NEBA	Connecting cable	

002	Connection technology left, field device side	
LE	Open end	
M8	Socket M8x1 A-coded, EN 61076-2-104	
M8C	Socket diameter 8 mm with snap-locking, A-coded, EN 61076-2-104	
M12	Socket M12x1 A-coded, EN 61076-2-101	

003	Cable outlet left	
	None	
G	Straight	
W	Angled	

004	Number of pins/wires on the left	
3	3	
4	4	
5	5	

005	Display	
	None	
N	LED switching state, NPN	
P	LED switching state, PNP	

006	Cable characteristic	
U	Suitable for energy chains/robots	

007	Cable length	
	...m	
0.5	0.5 m	
1	1 m	
1.5	1.5 m	
2	2 m	
2.5	2.5 m	
5	5 m	
10	10 m	
20	20 m	

008	Cable identification	
N	Without label holder	

009	Connection technology right, controller side	
LE	Open end	
M8	Plug M8x1 A-coded, EN 61076-2-104	
M12	Plug M12x1 A-coded, EN 61076-2-101	

010	Cable outlet right	
	None	
G	Straight	
W	Angled	

011	Number of pins/wires on the right	
3	3	
4	4	
5	5	

chanhvinh.com

Datasheet

Technical data – Electrical connection 1

Electrical connection 1, connector system	M12x1, A-coded to EN 61076-2-101	M8x1, A-coded, to EN 61076-2-104	Open end	Diameter 8 mm, A-coded to EN 61076-2-104
Electrical connection 1, function	Field device side			
Electrical connection 1, connection type	Socket		Cable	Socket
Electrical connection 1, cable outlet	Straight, Angled		–	Straight, Angled
Electrical connection 1, design	Round		–	Round
Electrical connection 1, number of connections/cores	5	3 … 4	3 … 5	3
Electrical connection 1, used connections/cores	3 … 5	3 … 4	3 … 5	3
Electrical connection 1, type of mounting	Screw-type lock with 13 mm hexagon and longitudinal knurl; Rotatable	Screw-type lock with hexagon A/F 9 mm and longitudinal knurl; Rotatable	–	Snap-locking
Electrical connection 1, compatible type of mounting	Compatible with rotatable/non-rotatable screw-type lock		–	Compatible with latching lock
Electrical connection 1, terminal allocation	Pin 1 = BN, Pin 2 = WH, Pin 3 = BU, Pin 4 = BK, Pin 5 = GY	Pin 1 = BN, Pin 2 = WH, Pin 3 = BU, Pin 4 = BK	Pin 1 = BN, Pin 2 = WH, Pin 3 = BU, Pin 4 = BK, Pin 5 = GY	Pin 1 = BN, Pin 3 = BU, Pin 4 = BK
Electrical connection 1, display	None Status indicator LED green Switching status indication, yellow LED for PNP N/O contact Switching status indication, yellow LED for NPN N/O contact		None	
Frequency of connection	100			

Technical data – Electrical connection 2

Electrical connection 2, connector system	M12x1, A-coded to EN 61076-2-101	M8x1, A-coded to EN 61076-2-104	Open end
Electrical connection 2, function	Controller side		
Electrical connection 2, connection type	Plugs		Cable
Electrical connection 2, design	Round		–
Electrical connection 2, number of connections/cores	3 … 5	3 … 4	3 … 5
Electrical connection 2, used connections/cores	3 … 5	3 … 4	3 … 5
electrical connection 2, type of mounting	Screw-type lock with 13 mm hexagon and longitudinal knurl; Rotatable	Screw-type lock with hexagon A/F 9 mm and longitudinal knurl; Rotatable	–
Electrical connection 2, compatible type of mounting	Compatible with rotatable/non-rotatable screw-type lock		–
Electrical connection 2, terminal allocation	Pin 1 = BN, Pin 2 = WH, Pin 3 = BU, Pin 4 = BK, Pin 5 = GY	Pin 1 = BN, Pin 2 = WH, Pin 3 = BU, Pin 4 = BK	Pin 1 = BN, Pin 2 = WH, Pin 3 = BU, Pin 4 = BK, Pin 5 = GY
Electrical connection 2, display	None		
Frequency of connection	100		

Technical data – Electrical, with switching status indication

Operational voltage range DC	10 … 30 V
Immunity to surge	0.8 kV
Current rating at 40° C	4 A
Note on permissible current load at 40°C	Observe derating
Overvoltage category	II
Pollution degree	3
Note on the contamination level	In mounted state

chanhvinh.com

Datasheet

Wiring of connecting cables with display for PNP N/O contact

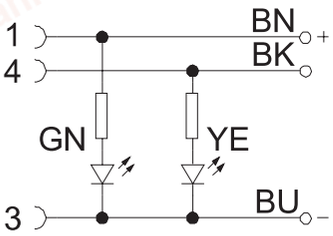

Wiring of connecting cables with indicator for NPN N/O contact

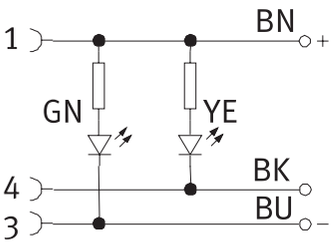

Technical data – Electrical, without switching status indication

Electrical connection 2, number of connections/cores	3	4	5
Operational voltage range DC	0 ... 250 V		0 ... 60 V
Note on operational voltage range DC	0 - 30 V for UL applications NEC/CEC CLASS 2		
Operational voltage range AC	0 ... 250 V		0 ... 48 V
Note on operational voltage range AC	0 - 30 V for UL applications NEC/CEC CLASS 2		
Immunity to surge	1.5 ... 2.5 kV		1.5 kV
Current rating at 40° C	4 A		
Note on permissible current load at 40°C	Observe derating		
Overvoltage category	II		
Pollution degree	3		
Note on the contamination level	In mounted state		

Technical data – Cable

Electrical connection 2, number of connections/cores	3	4	5
Cable diameter	3.8 mm	4.5 mm	
Cable characteristic	Suitable for energy chains/robot applications, Abrasion-resistant, Low adhesion, Flame-retardant and self-extinguishing		
Bending radius, fixed cable	≥12 mm	≥14 mm	
Bending radius, moving cable	≥39 mm	≥46 mm	
Test conditions cable	Test conditions on request Torsional strength: > 300,000 cycles, ±270°/0.1 m Flexural strength: >50000 cycles, bending radius 5 mm Energy chain: > 5 million cycles, bending radius 28 mm		
Notes on test conditions cable	Tested at 23°C		
Cable structure	3 x 0.25 mm²	4 x 0.25 mm²	5 x 0.25 mm²
Nominal cross section conductor	0.25 mm²		
Special characteristics	UV resistant, Hydrolysis-resistant, Resistant to cooling lubricants, Resistant to microbes, Oil resistant, Ozone-resistant		
Wire ends	Sheath removed, Cut off bluntly		
Cable designation	Without inscription label holder		

chanhvinh.com

Datasheet

Materials	
Material housing	TPE-U(PUR)
Housing colour	Black
Material cable sheath	TPE-U(PUR)
Cable sheath colour	Grey
Material insulating sheath	PP
Material screw-type lock	Die-cast zinc, nickel-plated
Material seals	FPM
Material electrical contact	Gold-plated copper alloy
Note on materials	CFC-free, RoHS-compliant, Cadmium-free, Free of halogen, Free of phosphoric acid ester
Special characteristics	UV resistant, Hydrolysis-resistant, Resistant to cooling lubricants, Resistant to microbes, Oil resistant, Ozone-resistant
LABS (PWIS) conformity	VDMA24364-B2-L
Suitability for the production of Li-ion batteries	Product corresponds to the internal product definition from Festo for use in battery production:Metals with more than 1% by mass of copper, zinc or nickel are excluded from use.The exceptions are nickel in steel, chemically nickel-plated surfaces, printed circuit boards, cables, electrical plug connectors and coils
Cleanroom class	Class 4 according to ISO 14644-1

Operating and environmental conditions, with switching status indication	
Ambient temperature	-40 ... 85°C
Note on ambient temperature	-40 - 50°C for UL applications
Ambient temperature with moving cable	-20 ... 85°C
Note on the ambient temperature with flexible cable installation	-20 - 50°C for UL applications
Storage temperature	-25 ... 55°C
Note on storage temperature	Temporarily during transport in packaging -40 ... 85°C
Corrosion resistance class CRC [1)]	1 - Low corrosion stress
Relative air humidity	Max. 93% at 40 °C
Nominal altitude of use	<= 2000 m NHN
CE mark (see declaration of conformity) [2)]	In accordance with EU RoHS Directive
UKCA marking (see declaration of conformity)[3)]	To UK RoHS instructions
Approval	c UL us listed (OL)
Certificate issuing authority	UL E253748
Note on degree of protection	In assembled state
Outdoor applications	Application areas with direct exposure to outdoor climatic influences Class D1 based on IEC 60654-1
Instructions on use	Meets the requirements of IEC 61010-1 and 61010-2-202, in particular for electrically operated valves from Festo., Only energy-limited circuits with a maximum current of 4 A at a max. open circuit voltage of 30 V DC are permissible for supplying electrically actuated valves from Festo.
Intended use	The connecting cable connects field devices (sensors, actuators) with controllers.

1) More information: www.festo.com/x/topic/crc

2) More information www.festo.com/catalogue → Support/Downloads.

3) More information www.festo.com/catalogue → Support/Downloads.

chanhvinh.com

Datasheet

Operating and environmental conditions, without switching status indication

Electrical connection 1, connector system	M12x1, A-coded to EN 61076-2-101			M8x1, A-coded, to EN 61076-2-104		Open end			Diameter 8 mm, A-coded to EN 61076-2-104
Electrical connection 2, number of connections/cores	3	4	5	3	4	3	4	5	3

Ambient temperature	-40 ... 85°C	
Note on ambient temperature	-40 - 50°C for UL applications	
Ambient temperature with moving cable	-20 ... 85°C	
Note on the ambient temperature with flexible cable installation	-20 - 50°C for UL applications	
Storage temperature	-25 ... 55°C	
Corrosion resistance class CRC [1]	1 - Low corrosion stress	
Relative air humidity	Max. 93% at 40 °C	
Nominal altitude of use	<= 2000 m NHN	
CE mark (see declaration of conformity) [2]	To EU Low Voltage Directive In accordance with EU RoHS Directive	In accordance with EU RoHS Directive
UKCA marking (see declaration of conformity)[3]	To UK RoHS instructions To UK regulations for electrical equipment	To UK RoHS instructions
Approval	c UL us listed (OL)	
Certificate issuing authority	UL E253748	
Degree of protection	IP65, IP68, IP69K	
Note on degree of protection	In assembled state	
Outdoor applications	Application areas with direct exposure to outdoor climatic influences Class D1 based on IEC 60654-1	
Instructions on use	Meets the requirements of IEC 61010-1 and 61010-2-202, in particular for electrically operated valves from Festo., Only energy-limited circuits with a maximum current of 4 A at a max. open circuit voltage of 30 V DC are permissible for supplying electrically actuated valves from Festo.	

1) More information: www.festo.com/x/topic/crc

2) More information www.festo.com/catalogue → Support/Downloads.

3) More information www.festo.com/catalogue → Support/Downloads.

Current rating as a function of the ambient temperature, connection technology M8x1

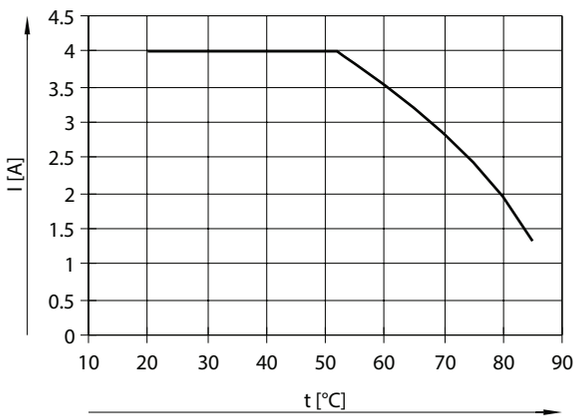

chanhvinh.com

Datasheet

Current rating depending on the ambient temperature, connection technology M8x1, for UL applications

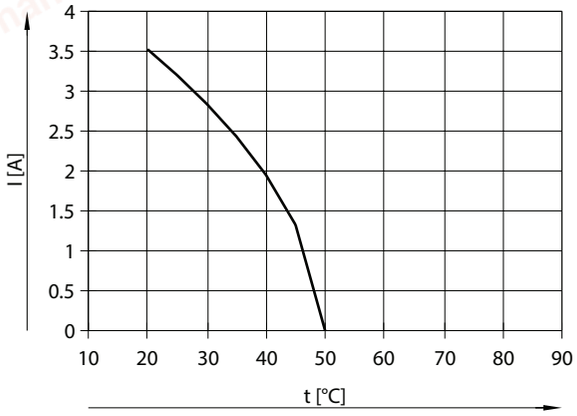

Current rating as a function of the ambient temperature, connection technology M12x1

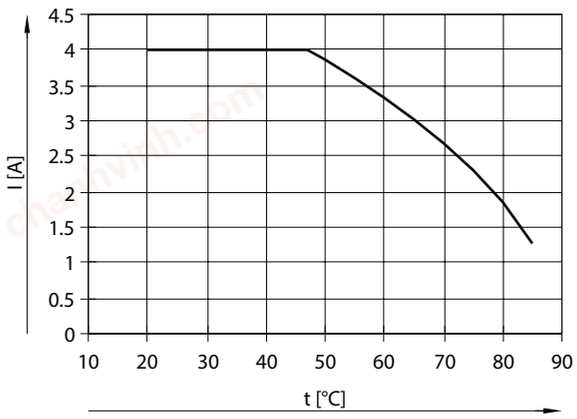

Current rating depending on the ambient temperature, connection technology M12x1, for UL applications

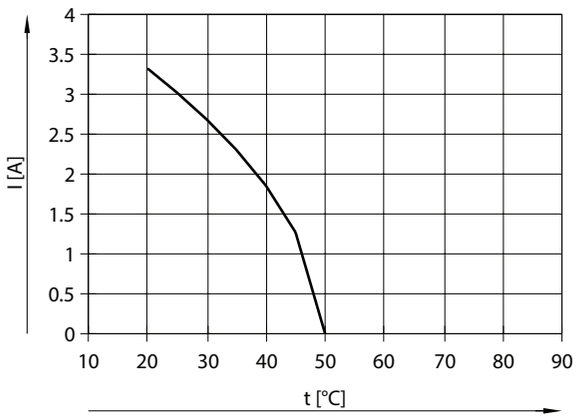

chanhvinh.com

Dimensions

Dimensions – Open end – plug, straight Download CAD data www.festo.com

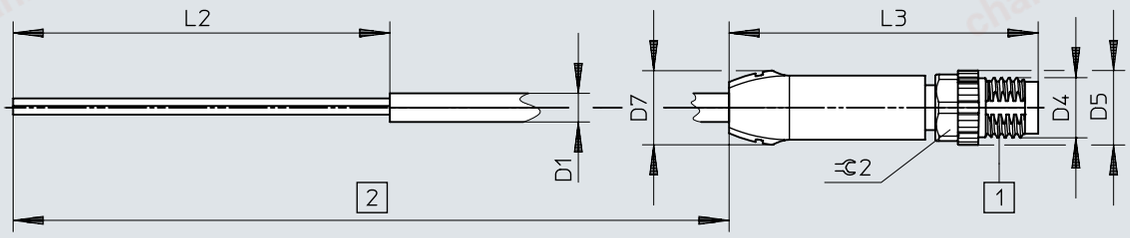

[1] Plug
[2] Cable, length depending on the order

	D1 ⌀	D4	D5 ⌀	D7 ⌀	L2	L3	⌀2
NEBA-LE3-...-M8G3	3,8	M8x1	10	10	50	41	9
NEBA-LE4-...-M8G4	4,5	M8x1	10	10	50	41	9
NEBA-LE3-...-M12G3	3,8	M12x1	15	13,7	50	53,4	13
NEBA-LE4-...-M12G4	4,5	M12x1	15	13,7	50	53,4	13
NEBA-LE5-...-M12G5	4,5	M12x1	15	13,7	50	53,4	13

chanhvinh.com

Dimensions

Dimensions – Open end – angled plug Download CAD data www.festo.com

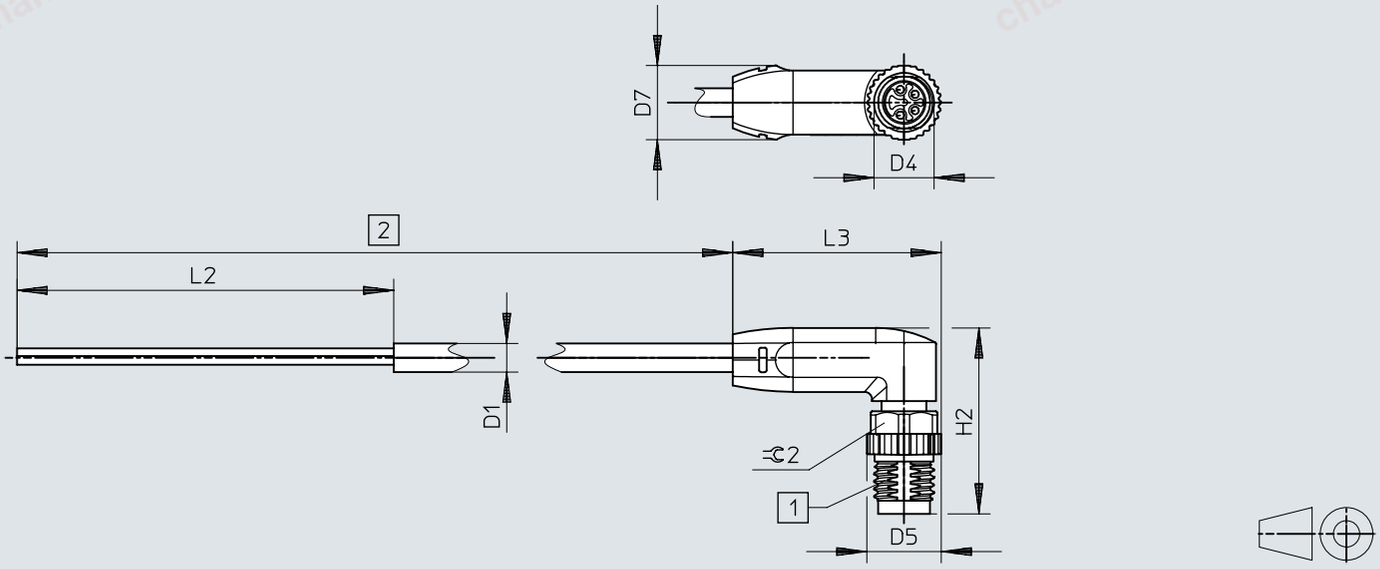

[1] Plug
[2] Cable, length depending on the order

	D1 ø	D4	D5 ø	D7 ø	H2	L2	L3	⊂2
NEBA-LE3-...-M8W3	3,8	M8x1	10	10	24,7	50	27,7	9
NEBA-LE4-...-M8W4	4,5	M8x1	10	10	24,7	50	27,7	9
NEBA-LE3-...-M12W3	3,8	M12x1	15	13,7	32,6	50	36,4	13
NEBA-LE4-...-M12W4	4,5	M12x1	15	13,7	32,6	50	36,4	13
NEBA-LE5-...-M12W5	4,5	M12x1	15	13,7	32,6	50	36,4	13

chanhvinh.com

Dimensions

Dimensions – Socket, straight – open end Download CAD data www.festo.com

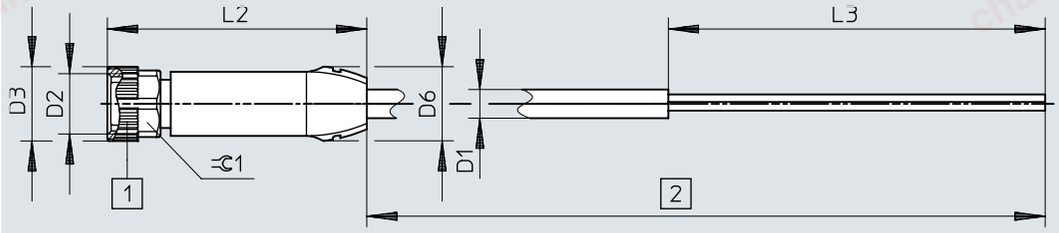

[1] Socket
[2] Cable, length depending on the order

	D1 ø	D2	D3 ø	D6 ø	L2	L3	⫧1
NEBA-M8G3-...-LE3	3,8	M8x1	10	10	34,4	50	9
NEBA-M8G4-...-LE4	4,5	M8x1	10	10	34,4	50	9
NEBA-M8CG3-...-LE3	3,8	8	–	10	32,6	50	–
NEBA-M12G5-...-LE3	3,8	M12x1	15	13,7	46,8	50	13
NEBA-M12G5-...-LE4	4,5	M12x1	15	13,7	46,8	50	13
NEBA-M12G5-...-LE5	4,5	M12x1	15	13,7	46,8	50	13

Dimensions

Dimensions – Straight socket – straight plug Download CAD data www.festo.com

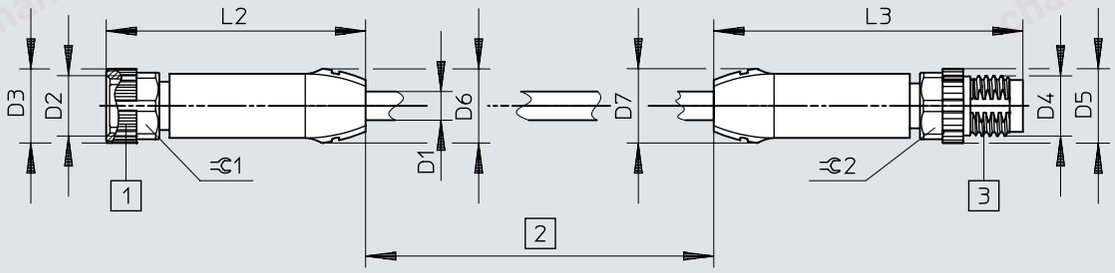

[1] Socket
[2] Cable, length depending on the order
[3] Plug

	D1 ø	D2	D3 ø	D4	D5 ø	D6 ø	D7 ø	L2	L3	⊂1	⊂2
NEBA-M8G3-...-M8G3	3,8	M8x1	10	M8x1	10	10	10	34,4	41	9	9
NEBA-M8G3-...-M8G4	3,8	M8x1	10	M8x1	10	10	10	34,4	41	9	9
NEBA-M8G3-...-M12G3	3,8	M8x1	10	M12x1	15	10	13,7	34,4	53,4	9	13
NEBA-M8G4-...-M8G4	4,5	M8x1	10	M8x1	10	10	10	34,4	41	9	9
NEBA-M8G4-...-M12G4	4,5	M8x1	10	M12x1	15	10	13,7	34,4	53,4	9	13
NEBA-M8CG3-...-M8G3	3,8	8	–	M8x1	10	10	10	32,6	41	–	9
NEBA-M8CG3-...-M8G4	3,8	8	–	M8x1	10	10	10	32,6	41	–	9
NEBA-M8CG3-...-M12G3	3,8	8	–	M12x1	15	10	13,7	32,6	53,4	–	13
NEBA-M12G5-...-M8G3	3,8	M12x1	15	M8x1	10	13,7	10	46,8	41	13	9
NEBA-M12G5-...-M12G3	3,8	M12x1	15	M12x1	15	13,7	13,7	46,8	53,4	13	13
NEBA-M12G5-...-M8G4	4,5	M12x1	15	M8x1	10	13,7	10	46,8	41	13	9
NEBA-M12G5-...-M12G4	4,5	M12x1	15	M12x1	15	13,7	13,7	46,8	53,4	13	13
NEBA-M12G5-...-M12G5	4,5	M12x1	15	M12x1	15	13,7	13,7	46,8	53,4	13	13

chanhvinh.com

Dimensions

Dimensions – Socket, straight – plug, angled

Download CAD data www.festo.com

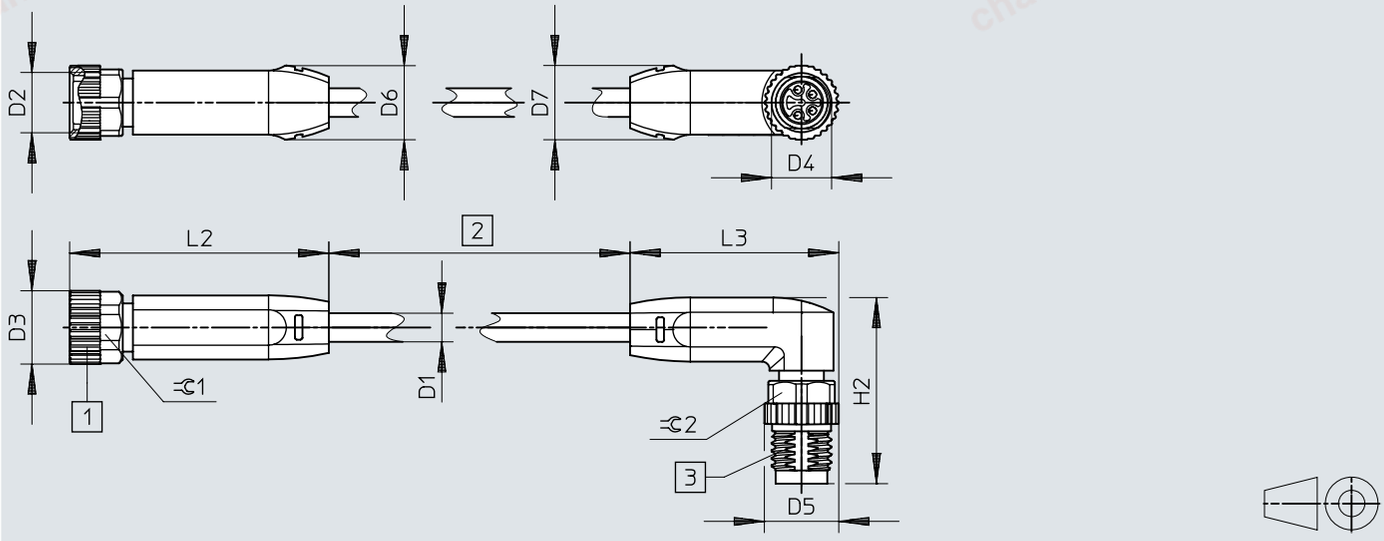

[1] Socket
[2] Cable, length depending on the order
[3] Plug

	D1 ⌀	D2	D3 ⌀	D4	D5 ⌀	D6 ⌀	D7 ⌀	H2	L2	L3	⌲1	⌲2
NEBA-M8G3-...-M8W3	3,8	M8x1	10	M8x1	10	10	10	24,7	34,4	27,7	9	9
NEBA-M8G3-...-M8W4	3,8	M8x1	10	M8x1	10	10	10	24,7	34,4	27,7	9	9
NEBA-M8G3-...-M12W3	3,8	M8x1	10	M12x1	15	10	13,7	32,6	34,4	36,4	9	13
NEBA-M8G4-...-M8W4	4,5	M8x1	10	M8x1	10	10	10	24,7	34,4	27,7	9	9
NEBA-M8G4-...-M12W4	4,5	M8x1	10	M12x1	15	10	13,7	32,6	34,4	36,4	9	13
NEBA-M8CG3-...-M8W3	3,8	8	–	M8x1	10	10	10	24,7	32,6	27,7	–	9
NEBA-M8CG3-...-M8W4	3,8	8	–	M8x1	10	10	10	24,7	32,6	27,7	–	9
NEBA-M8CG3-...-M12W3	3,8	8	–	M12x1	15	10	13,7	32,6	32,6	36,4	–	13
NEBA-M12G5-...-M8W3	3,8	M12x1	15	M8x1	10	13,7	10	24,7	46,8	27,7	13	9
NEBA-M12G5-...-M12W3	3,8	M12x1	15	M12x1	15	13,7	13,7	32,6	46,8	36,4	13	13
NEBA-M12G5-...-M8W4	4,5	M12x1	15	M8x1	10	13,7	10	24,7	46,8	27,7	13	9
NEBA-M12G5-...-M12W4	4,5	M12x1	15	M12x1	15	13,7	13,7	32,6	46,8	36,4	13	13
NEBA-M12G5-...-M12W5	4,5	M12x1	15	M12x1	15	13,7	13,7	32,6	46,8	36,4	13	13

Dimensions

Dimensions – Socket, angled – open end Download CAD data www.festo.com

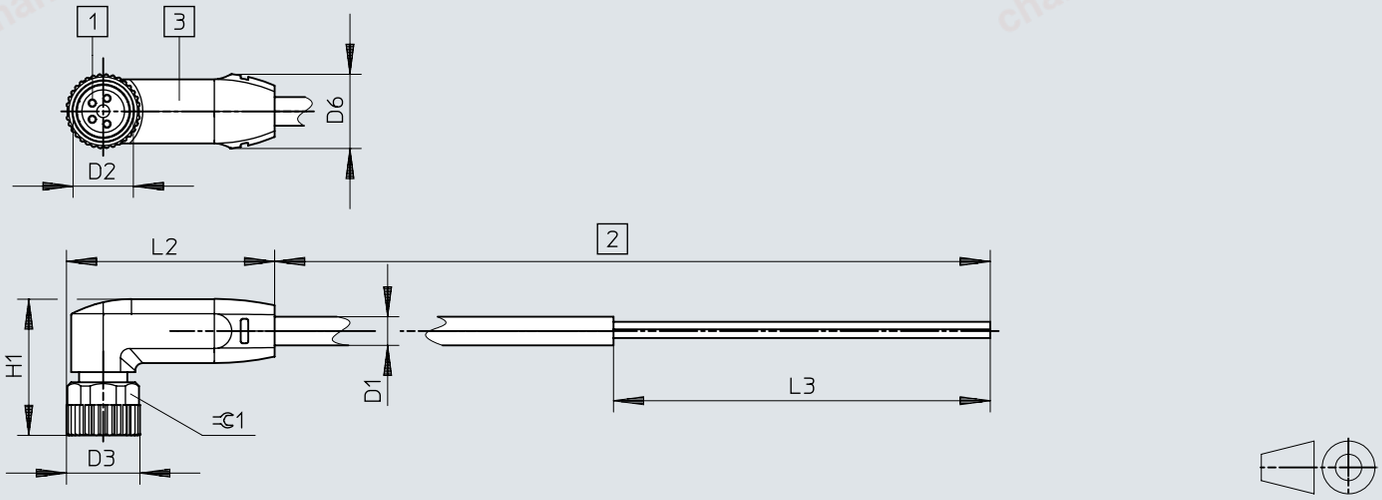

[1] Socket
[2] Cable, length depending on the order
[3] Display field

	D1 ø	D2	D3 ø	D6 ø	H1	L2	L3	⊂1
NEBA-M8W3...-LE3	3,8	M8x1	10	10	18,1	27,6	50	9
NEBA-M8W4-...-LE4	4,5	M8x1	10	10	18,1	27,6	50	9
NEBA-M8CW3-...-LE3	3,8	8	–	10	17,3	27	50	–
NEBA-M12W5...-LE3	3,8	M12x1	15	13,7	25,1	36,4	50	13
NEBA-M12W5...-LE4	4,5	M12x1	15	13,7	25,1	36,4	50	13
NEBA-M12W5...-LE5	4,5	M12x1	15	13,7	25,1	36,4	50	13

chanhvinh.com

Dimensions

Dimensions – Socket, angled – plug, straight Download CAD data www.festo.com

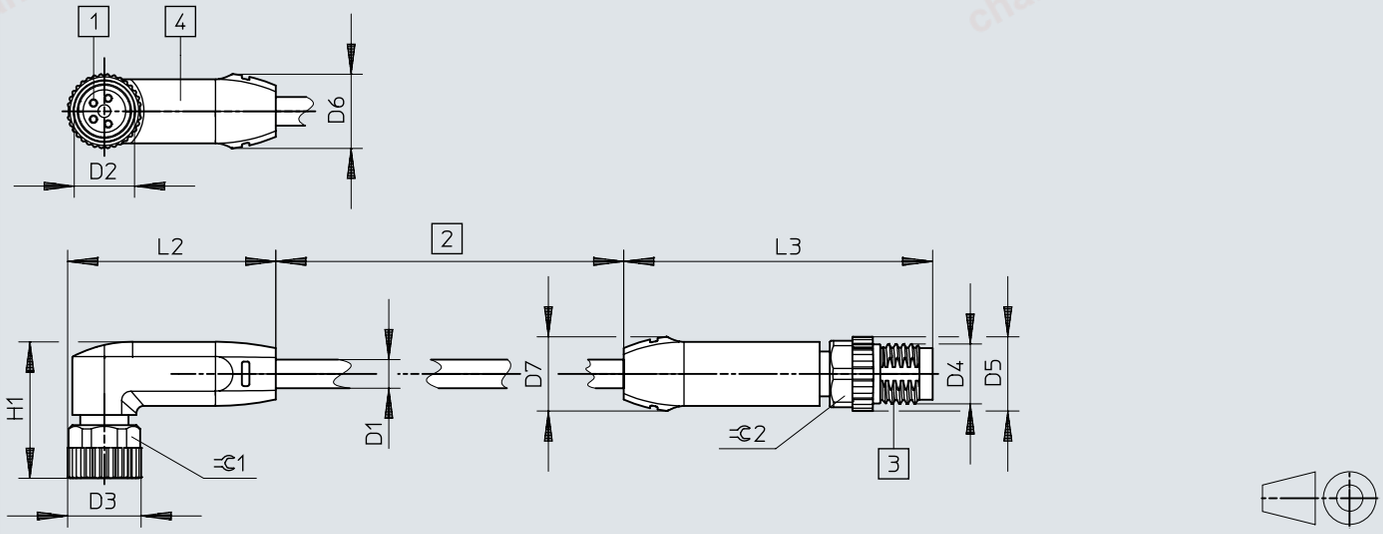

[1] Socket
[2] Cable, length depending on the order
[3] Plug
[4] Display field

	D1 ø	D2	D3 ø	D4	D5 ø	D6 ø	D7 ø	H1	L2	L3	⊂1	⊂2
NEBA-M8W3...-M8G3	3,8	M8x1	10	M8x1	10	10	10	18,1	27,6	41	9	9
NEBA-M8W3...-M8G4	3,8	M8x1	10	M8x1	10	10	10	18,1	27,6	41	9	9
NEBA-M8W3...-M12G3	3,8	M8x1	10	M12x1	15	10	13,7	18,1	27,6	53,4	9	13
NEBA-M8W4-...-M8G4	4,5	M8x1	10	M8x1	10	10	10	18,1	27,6	41	9	9
NEBA-M8W4-...-M12G4	4,5	M8x1	10	M12x1	15	10	13,7	18,1	27,6	53,4	9	13
NEBA-M8CW3-...-M8G3	3,8	8	–	M8x1	10	10	10	17,3	27	41	–	9
NEBA-M8CW3-...-M8G4	3,8	8	–	M8x1	10	10	10	17,3	27	41	–	9
NEBA-M8CW3-...-M12G3	3,8	8	–	M12x1	15	10	13,7	17,3	27	53,4	–	13
NEBA-M12W5...-M8G3	3,8	M12x1	15	M8x1	10	13,7	10	25,1	36,4	41	13	9
NEBA-M12W5...-M12G3	3,8	M12x1	15	M12x1	15	13,7	13,7	25,1	36,4	53,4	13	13
NEBA-M12W5...-M8G4	4,5	M12x1	15	M8x1	10	13,7	10	25,1	36,4	41	13	9
NEBA-M12W5...-M12G4	4,5	M12x1	15	M12x1	15	13,7	13,7	25,1	36,4	53,4	13	13
NEBA-M12W5...-M12G5	4,5	M12x1	15	M12x1	15	13,7	13,7	25,1	36,4	53,4	13	13

Dimensions

Dimensions – Angled socket – angled plug Download CAD data www.festo.com

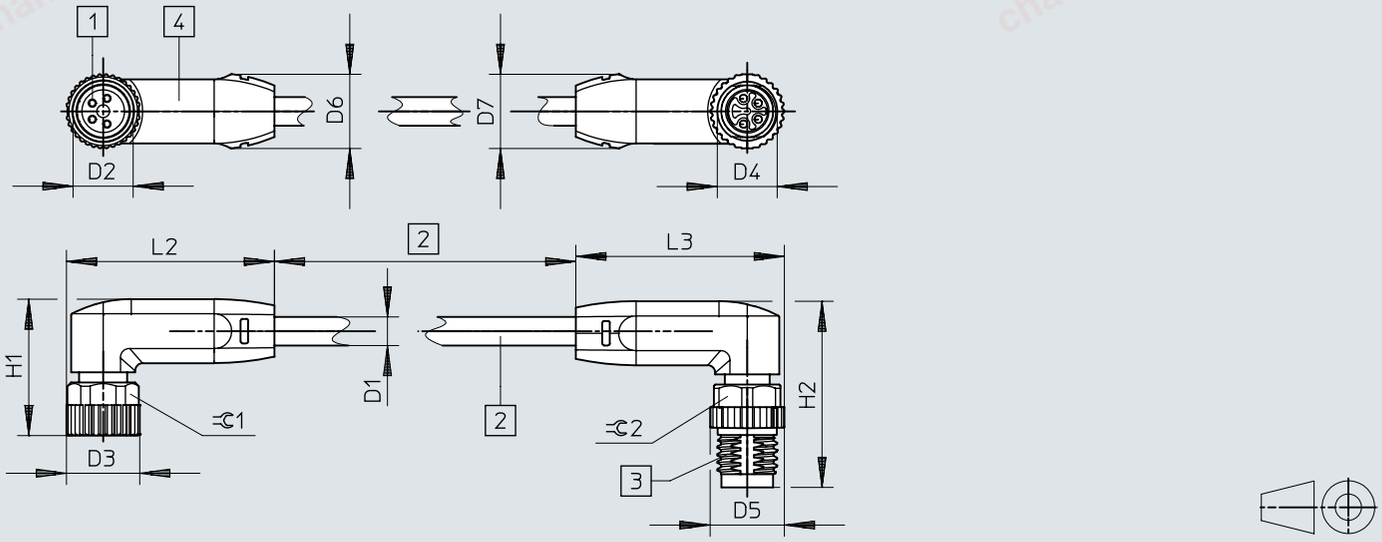

[1] Socket
[2] Cable, length depending on the order
[3] Plug
[4] Display field

	D1 ø	D2	D3 ø	D4	D5 ø	D6 ø	D7 ø	H1	H2	L2	L3	⊂1	⊂2
NEBA-M8W3...-M8W3	3,8	M8x1	10	M8x1	10	10	10	18,1	24,7	27,6	27,7	9	9
NEBA-M8W3...-M8W4	3,8	M8x1	10	M8x1	10	10	10	18,1	24,7	27,6	27,7	9	9
NEBA-M8W3...-M12W3	3,8	M8x1	10	M12x1	15	10	13,7	18,1	32,6	27,6	36,4	9	13
NEBA-M8W4-...-M8W4	4,5	M8x1	10	M8x1	10	10	10	18,1	24,7	27,6	27,7	9	9
NEBA-M8W4-...-M12W4	4,5	M8x1	10	M12x1	15	10	13,7	18,1	32,6	27,6	36,4	9	13
NEBA-M8CW3-...-M8W3	3,8	8	–	M8x1	10	10	10	17,3	24,7	27	27,7	–	9
NEBA-M8CW3-...-M8W4	3,8	8	–	M8x1	10	10	10	17,3	24,7	27	27,7	–	9
NEBA-M8CW3-...-M12W3	3,8	8	–	M12x1	15	10	13,7	17,3	32,6	27	36,4	–	13
NEBA-M12W5...-M8W3	3,8	M12x1	15	M8x1	10	13,7	10	25,1	24,7	36,4	27,7	13	9
NEBA-M12W5...-M12W3	3,8	M12x1	15	M12x1	15	13,7	13,7	25,1	32,6	36,4	36,4	13	13
NEBA-M12W5...-M8W4	4,5	M12x1	15	M8x1	10	13,7	10	25,1	24,7	36,4	27,7	13	9
NEBA-M12W5...-M12W4	4,5	M12x1	15	M12x1	15	13,7	13,7	25,1	32,6	36,4	36,4	13	13
NEBA-M12W5...-M12W5	4,5	M12x1	15	M12x1	15	13,7	13,7	25,1	32,6	36,4	36,4	13	13

chanhvinh.com

Ordering data

Ordering data – Electrical connection 1 open end

Electrical connection 1, number of connections/cores	Electrical connection 2, cable outlet	Electrical connection 2, number of connections/cores	Cable length	Product weight	Part no.	Type
3	Straight	3	2.5 m	50 g	8078270	NEBA-LE3-U-2.5-N-M8G3
			5 m	96 g	8078271	NEBA-LE3-U-5-N-M8G3
4		4	2.5 m	67 g	8078272	NEBA-LE4-U-2.5-N-M8G4
			5 m	129 g	8078273	NEBA-LE4-U-5-N-M8G4
5		5	2.5 m	77 g	8078268	NEBA-LE5-U-2.5-N-M12G5
			5 m	144 g	8078269	NEBA-LE5-U-5-N-M12G5

Ordering data – Electrical connection 1 M8 socket, 3-pin, with switching status indication

Electrical connection 1, cable outlet	Electrical connection 2, connector system	Electrical connection 1, display	Cable length	Product weight	Part no.	Type
Angled	Open end	Status indicator LED green; Switching status indication, yellow LED for PNP N/O contact	2.5 m	50 g	8078260	NEBA-M8W3P-U-2.5-N-LE3
			5 m	96 g	8078261	NEBA-M8W3P-U-5-N-LE3
		Status indicator LED green; Switching status indication, yellow LED for NPN N/O contact	2.5 m	50 g	8078262	NEBA-M8W3N-U-2.5-N-LE3
			5 m	96 g	8078263	NEBA-M8W3N-U-5-N-LE3

Ordering data – Electrical connection 1 M8 socket, 3-pin, without switching status indication

Electrical connection 1, cable outlet	Electrical connection 2, connector system	Electrical connection 2, cable outlet	Cable length	Product weight	Part no.	Type
Straight	M12x1, A-coded to EN 61076-2-101	Straight	0.5 m	23 g	8078278	NEBA-M8G3-U-0.5-N-M12G3
			1 m	33 g	8078279	NEBA-M8G3-U-1-N-M12G3
			2.5 m	60 g	8078280	NEBA-M8G3-U-2.5-N-M12G3
			5 m	107 g	8078281	NEBA-M8G3-U-5-N-M12G3
	M8x1, A-coded to EN 61076-2-104		0.5 m	17 g	★ 8078282	NEBA-M8G3-U-0.5-N-M8G3
			1 m	26 g	★ 8078283	NEBA-M8G3-U-1-N-M8G3
			1.5 m	35 g	8078284	NEBA-M8G3-U-1.5-N-M8G3
			2 m	44 g	8078285	NEBA-M8G3-U-2-N-M8G3
			2.5 m	54 g	★ 8078286	NEBA-M8G3-U-2.5-N-M8G3
			5 m	100 g	★ 8078287	NEBA-M8G3-U-5-N-M8G3
			10 m	192 g	★ 8078288	NEBA-M8G3-U-10-N-M8G3
	Open end		1 m	22 g	8078222	NEBA-M8G3-U-1-N-LE3
			2.5 m	50 g	★ 8078223	NEBA-M8G3-U-2.5-N-LE3
			5 m	96 g	★ 8078224	NEBA-M8G3-U-5-N-LE3
			10 m	188 g	★ 8078225	NEBA-M8G3-U-10-N-LE3
			20 m	373 g	★ 8078226	NEBA-M8G3-U-20-N-LE3
Angled	M8x1, A-coded to EN 61076-2-104	Straight	0.5 m	17 g	8078298	NEBA-M8W3-U-0.5-N-M8G3
			1 m	26 g	8078299	NEBA-M8W3-U-1-N-M8G3
			2.5 m	54 g	8078300	NEBA-M8W3-U-2.5-N-M8G3
			5 m	100 g	8078301	NEBA-M8W3-U-5-N-M8G3
	Open end		2.5 m	50 g	★ 8078230	NEBA-M8W3-U-2.5-N-LE3
			5 m	96 g	★ 8078231	NEBA-M8W3-U-5-N-LE3
			10 m	189 g	★ 8078232	NEBA-M8W3-U-10-N-LE3

Ordering data – Electrical connection 1 M8 socket, 3-pin, with snap-locking

Electrical connection 1, cable outlet	Electrical connection 2, connector system	Cable length	Product weight	Part no.	Type
Straight	Open end	2.5 m	49 g	8078264	NEBA-M8CG3-U-2.5-N-LE3
		5 m	95 g	8078265	NEBA-M8CG3-U-5-N-LE3
Angled		2.5 m	49 g	8078266	NEBA-M8CW3-U-2.5-N-LE3
		5 m	95 g	8078267	NEBA-M8CW3-U-5-N-LE3

chanhvinh.com

Ordering data

Ordering data – Electrical connection 1 M8 socket, 4-pin

Electrical connection 1, cable outlet	Electrical connection 2, connector system	Electrical connection 2, cable outlet	Cable length	Product weight	Part no.	Type
Straight	M12x1, A-coded to EN 61076-2-101	Straight	0.5 m	27 g	8078289	NEBA-M8G4-U-0.5-N-M12G4
			1 m	39 g	8078290	NEBA-M8G4-U-1-N-M12G4
			2.5 m	77 g	8078291	NEBA-M8G4-U-2.5-N-M12G4
			5 m	139 g	8078292	NEBA-M8G4-U-5-N-M12G4
	M8x1, A-coded to EN 61076-2-104		0.5 m	20 g	8078293	NEBA-M8G4-U-0.5-N-M8G4
			1 m	33 g	8078294	NEBA-M8G4-U-1-N-M8G4
			2.5 m	70 g	8078295	NEBA-M8G4-U-2.5-N-M8G4
			5 m	133 g	8078296	NEBA-M8G4-U-5-N-M8G4
	Open end		2.5 m	66 g	★ 8078227	NEBA-M8G4-U-2.5-N-LE4
			5 m	129 g	★ 8078228	NEBA-M8G4-U-5-N-LE4
			10 m	254 g	★ 8078229	NEBA-M8G4-U-10-N-LE4
Angled			2.5 m	66 g	★ 8078233	NEBA-M8W4-U-2.5-N-LE4
			5 m	129 g	★ 8078234	NEBA-M8W4-U-5-N-LE4
			10 m	254 g	8078235	NEBA-M8W4-U-10-N-LE4

Ordering data – Electrical connection 1 M12 socket, 5-pin, with switching status indication

Electrical connection 1, cable outlet	Electrical connection 2, connector system	Electrical connection 1, display	Cable length	Product weight	Part no.	Type
Angled	Open end	Status indicator LED green; Switching status indication, yellow LED for PNP N/O contact	2.5 m	56 g	8078256	NEBA-M12W5P-U-2.5-N-LE3
			5 m	103 g	8078257	NEBA-M12W5P-U-5-N-LE3
		Status indicator LED green; Switching status indication, yellow LED for NPN N/O contact	2.5 m	56 g	8078258	NEBA-M12W5N-U-2.5-N-LE3
			5 m	103 g	8078259	NEBA-M12W5N-U-5-N-LE3

Ordering data – Electrical connection 1 M12 socket, 5-pin, without switching status indication

Electrical connection 1, cable outlet	Electrical connection 2, connector system	Electrical connection 2, cable outlet	Electrical connection 2, number of connections/ cores	Cable length	Product weight	Part no.	Type
Straight	M12x1, A-coded to EN 61076-2-101	Straight	5	0.5 m	34 g	8078274	NEBA-M12G5-U-0.5-N-M12G5
				1 m	47 g	8078275	NEBA-M12G5-U-1-N-M12G5
				2.5 m	87 g	8078276	NEBA-M12G5-U-2.5-N-M12G5
				5 m	153 g	★ 8078277	NEBA-M12G5-U-5-N-M12G5
	Open end		3	2.5 m	55 g	8078236	NEBA-M12G5-U-2.5-N-LE3
				5 m	102 g	8078237	NEBA-M12G5-U-5-N-LE3
				10 m	194 g	8078238	NEBA-M12G5-U-10-N-LE3
			4	2.5 m	72 g	★ 8078239	NEBA-M12G5-U-2.5-N-LE4
				5 m	134 g	★ 8078240	NEBA-M12G5-U-5-N-LE4
				10 m	259 g	8078241	NEBA-M12G5-U-10-N-LE4
			5	2.5 m	85 g	★ 8078242	NEBA-M12G5-U-2.5-N-LE5
				5 m	142 g	★ 8078243	NEBA-M12G5-U-5-N-LE5
				10 m	274 g	★ 8078244	NEBA-M12G5-U-10-N-LE5
Angled			3	2.5 m	56 g	8078245	NEBA-M12W5-U-2.5-N-LE3
				5 m	103 g	8078246	NEBA-M12W5-U-5-N-LE3
				10 m	195 g	8078247	NEBA-M12W5-U-10-N-LE3
			4	2.5 m	73 g	★ 8078248	NEBA-M12W5-U-2.5-N-LE4
				5 m	135 g	★ 8078249	NEBA-M12W5-U-5-N-LE4
				10 m	260 g	★ 8078250	NEBA-M12W5-U-10-N-LE4
			5	2.5 m	76 g	8078251	NEBA-M12W5-U-2.5-N-LE5
				5 m	143 g	8078252	NEBA-M12W5-U-5-N-LE5
				10 m	275 g	8078253	NEBA-M12W5-U-10-N-LE5

chanhvinh.com

Ordering data

Ordering data – Modular product system					
Electrical connection 1, connector system	Cable characteristic	Cable length	Electrical connection 2, connector system	Part no.	Type
M12x1, A-coded to EN 61076-2-101 M8x1, A-coded, to EN 61076-2-104 Open end Diameter 8 mm, A-coded to EN 61076-2-104	Suitable for energy chains/ robot applications Abrasion-resistant Low adhesion Flame-retardant and self-extinguishing	0.3 ... 30 m	M12x1, A-coded to EN 61076-2-101, M8x1, A-coded to EN 61076-2-104, Open end	**8078221**	**NEBA-**

chanhvinh.com

Accessories

Inscription labels

	Size	Part no.	Type
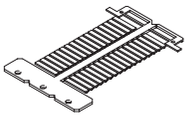	4x23 mm	**541598**	**ASLR-L-423**

Inscription label holder

	Type of mounting	Function	Size of pack	Cable diameter	Part no.	Type
	Clip	Inscription label holder	100	3.3 ... 4.8 mm	**8078307**	**NEAU-LH-3**
				4.2 ... 5.6 mm	**8143238**	**NEAU-LH-4**

Safety clip

	Function	Size	Part no.	Type
	Safety clip	M8	**548067**	**NEAU-M8-GD**
		M12	**548068**	**NEAU-M12-GD**