chanhvinh.com

Logic component OS



chanhvinh.com

Characteristics

At a glance

Pneumatic OR gate for logical function control.

- Pneumatic control system
- Product complies with ISO 1179-1 and ISO 228-1

Series

[OS]	OR gate

For an OR gate, at least one of all the input signals must be active in order to execute a function.

chanhvinh.com

Datasheet

General technical data

Pneumatic connection, port 1	G1/8	G1/4	G1/2	1/8 NPT	1/4 NPT	PK-3
Pneumatic connection, port 2	G1/8	G1/4	G1/2	1/8 NPT	1/4 NPT	PK-3
Pneumatic connection, port 3	G1/8	G1/4	G1/2	1/8 NPT	1/4 NPT	PK-3
Nominal size	4 mm	6.5 mm	12 mm	4 mm	6.5 mm	2.4 ... 2.5 mm
Standard nominal flow rate (standardised to DIN 1343)	500 l/min	1,170 l/min	5,000 l/min	500 l/min	1,170 l/min	100 ... 120 l/min
Type of mounting	With through-hole					Front panel mounting, With through-hole
Mounting position	optional		–	optional		

Function OS-1/2; OS-2-R-M5

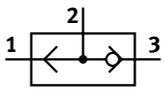

Function OS-1/8-B; OS-1/4-B; OS-PK-3

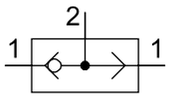

Function OS-PK-3-6/3

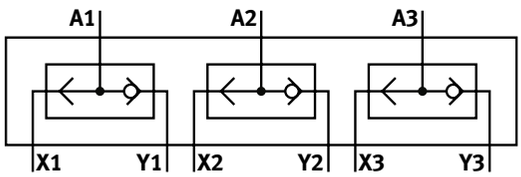

Operating and environmental conditions

Pneumatic connection, port 1	G1/8	G1/4	G1/2	1/8 NPT	1/4 NPT	PK-3
Operating pressure	1 ... 10 bar					1.6 ... 8 bar
Operating pressure	14.5 ... 145 psi					23.2 ... 116 psi
Operating medium	Compressed air to ISO 8573-1:2010 [7:-:-]					
Note on operating and pilot medium	Lubricated operation possible (in which case lubricated operation will always be required)					
Ambient temperature	-10 ... 60°C					
Media temperature	-10 ... 60°C					

Materials

Material housing	Wrought aluminium alloy, POM
Note on materials	RoHS-compliant
LABS (PWIS) conformity	VDMA24364-B1/B2-L

chanhvinh.com

Dimensions

Dimensions – OS-PK-3 Download CAD data www.festo.com

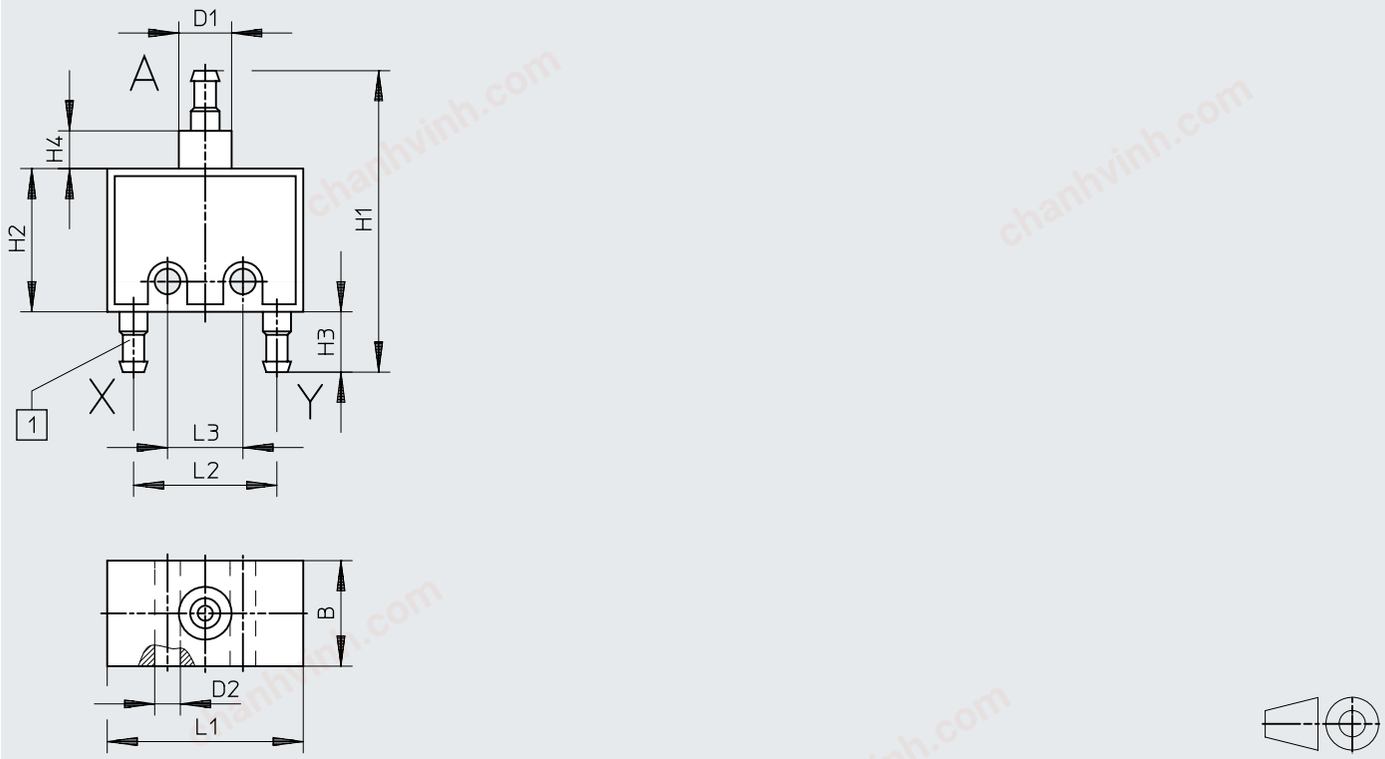

	B	D1 ø	D2 ø	H1	H2	H3	H4	L1	L2	L3
OS-PK-3	14	7	3,4	40	19	8	5	26	19	10

chanhvinh.com

Dimensions

Dimensions – OS-1/8-B Download CAD data www.festo.com

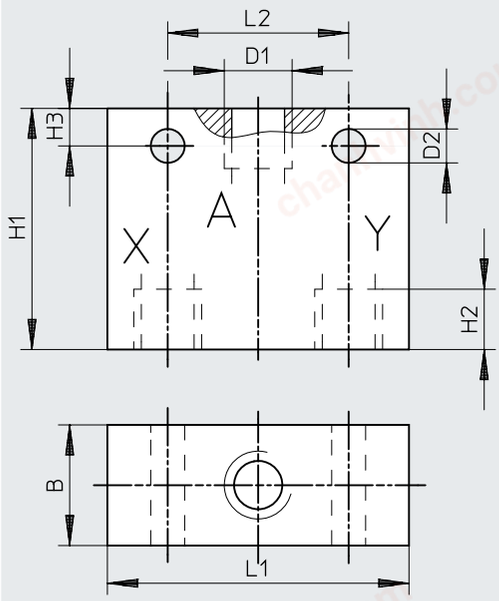

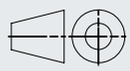

	B	D1	D2 ø	H1	H2	H3	L1	L2
OS-1/8-B	16	G1/8	4,5	32	8	5	40	24
OS-1/8-NPT	16	1/8 NPT	4,5	32	–	5	40	24

chanhvinh.com

Dimensions

Dimensions – OS-1/4-B Download CAD data www.festo.com

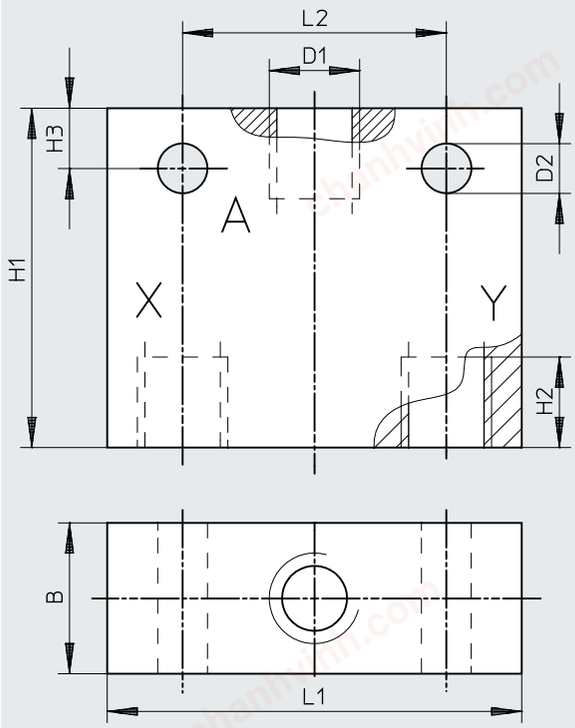

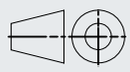

	B	D1	D2 ø	H1	H2	H3	L1	L2
OS-1/4-B	20	G1/4	6,6	45	12	8	55	35
OS-1/4-NPT	20	1/4 NPT	6,6	45	–	8	55	35

chanhvinh.com

Dimensions

Dimensions – OS-1/2 Download CAD data www.festo.com

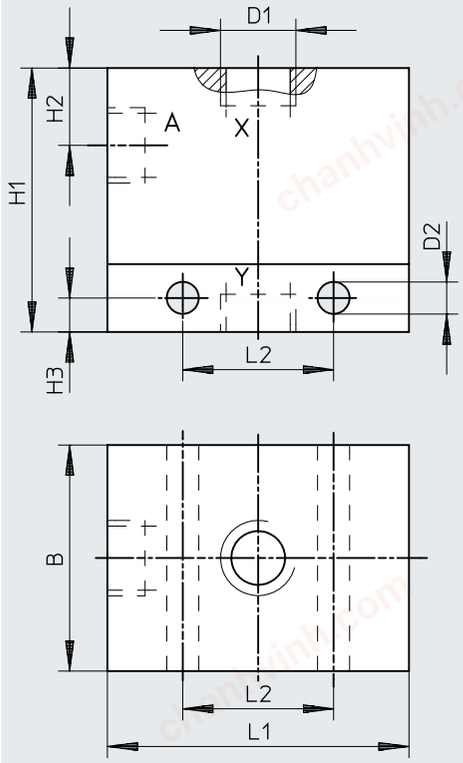

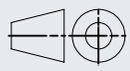

	B	D1	D2 ø	H1	H2	H3	L1	L2
OS-1/2	60	G1/2	8,5	70	20,5	9	80	40

chanhvinh.com

Dimensions

Dimensions – AND/OR blocks OS/ZK Download CAD data www.festo.com

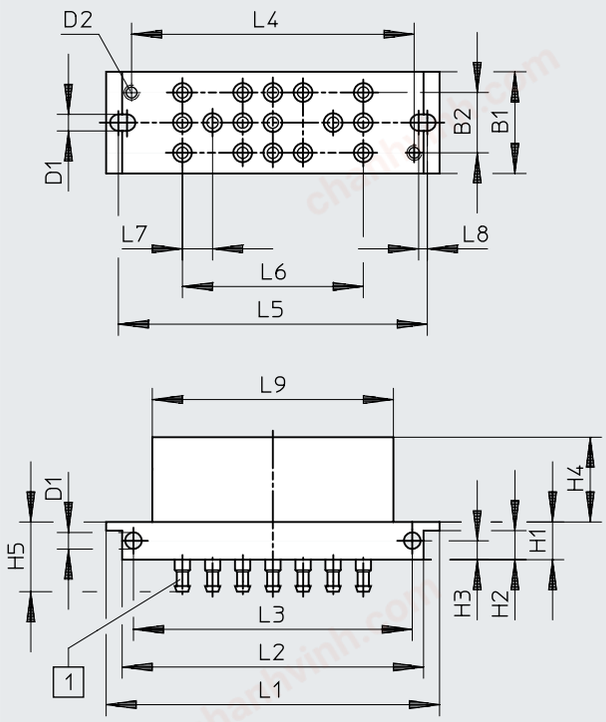



[1] Barbed connector for tubing, inside-Ø 3 mm

	B1	B2	D1 ø	D2	H1	H2	H3	H4	H5	L1	L2	L3	L4	L5	L6	L7	L8	L9
OS/ZK	27	16	4,4	M4	10	7,7	5	22,5	18,5	88,5	80,8	74	75	81	48	8	2,3	64

chanhvinh.com

Dimensions

Dimensions – Mounting frame NRRQ-2N Download CAD data www.festo.com

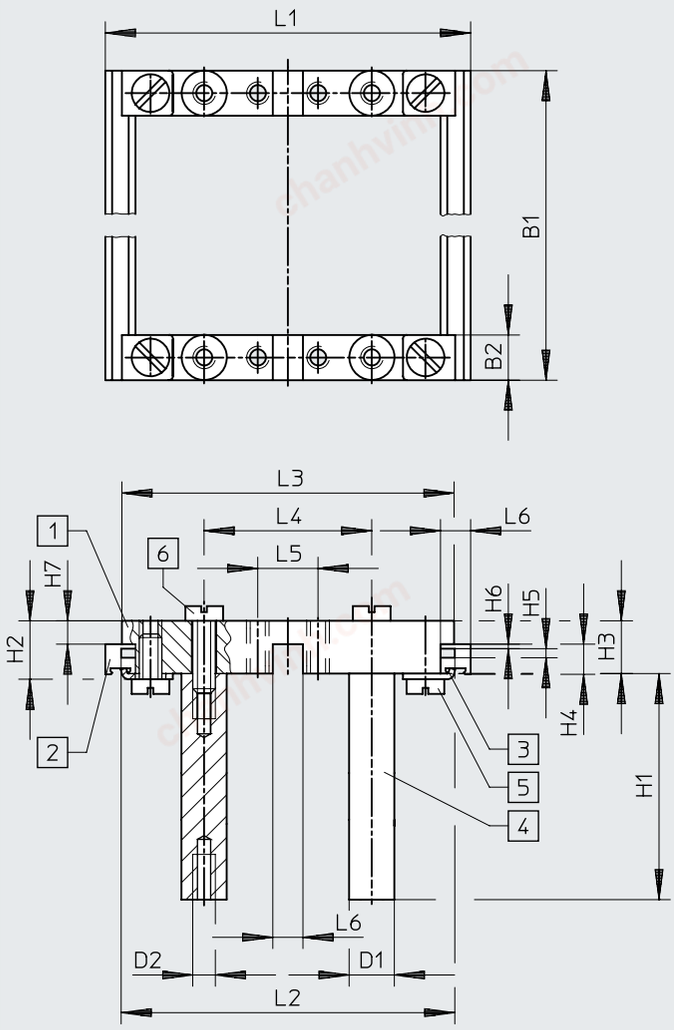

[1] Connecting component NRV-2N
[2] Profile strip NRQ-8-480
[3] Mounting bracket NRW-12/3
[4] Bolt NRB-12/60
[5] Socket head screw DIN 84-M6X18-4.8
[6] Socket head screw DIN 84-M6X12-4.8

	B1	B2	D1 ø	D2	H1	H2	H3	H4	H5	H6	H7	L1	L2	L3	L4	L5	L6
NRRQ	480	12	12	M6	60	15,5	14	8	2,4	1,2	6,2	97	88,6	88,2	44,5	16	8

chanhvinh.com

Ordering data

Ordering data

Pneumatic connection, port 1	Pneumatic connection, port 2	Pneumatic connection, port 3	Nominal size	Product weight	Part no.	Type
G1/8	G1/8	G1/8	4 mm	45 g	**6681**	**OS-1/8-B**
G1/4	G1/4	G1/4	6.5 mm	110 g	**6682**	**OS-1/4-B**
G1/2	G1/2	G1/2	12 mm		**3427**	**OS-1/2**
PK-3	PK-3	PK-3	2.4 mm	9 g	**6684**	**OS-PK-3**
			2.5 mm	90 g	**4232**	**OS-PK-3-6/3**

Ordering data – NPT (only for North America)

Pneumatic connection, port 1	Pneumatic connection, port 2	Pneumatic connection, port 3	Nominal size	Product weight	Part no.	Type
1/8 NPT	1/8 NPT	1/8 NPT	4 mm	45 g	**10412**	**OS-1/8-NPT**
1/4 NPT	1/4 NPT	1/4 NPT	6.5 mm	110 g	**10413**	**OS-1/4-NPT**

chanhvinh.com

Accessories

Mounting frame NRRQ

	Short type code	LABS (PWIS) conformity	Part no.	Type
	NRRQ	VDMA24364-B1/B2-L	**9365**	**NRRQ-2N**

Socket head screws

	Based on standard	LABS (PWIS) conformity	Part no.	Type
	DIN 84	VDMA24364-C1-L	**208938**	**DIN 84-M6X12-4.8**
			200568	**DIN 84-M6X18-4.8**

Mounting bracket NRW

	Short type code	LABS (PWIS) conformity	Part no.	Type
	NRW	VDMA24364-B1/B2-L	**11571**	**NRW-9/1,5-B**