chanhvinh.com

Filter silencer LFU



chanhvinh.com

Characteristics

At a glance

The filter silencer cleans the collected exhaust air from pneumatic control systems. The exhaust air escapes into the atmosphere via a fine filter insert (filter efficiency >99.99%).
At the same time, the noise from the exhaust air is greatly reduced. Any condensate is collected in the plastic bowl underneath and can be drained off via the condensate drain.

- Removes up to 99.99% of oil and other contaminants from the exhaust air
- The silencer reduces the noise from the exhaust air regardless of frequency
- Product complies with ISO 1179-1 and ISO 228-1

chanhvinh.com

Type code

001	Series	
LFU	Filter silencer	

002	Pneumatic connection	
1/4	Female thread G1/4	
3/8	Female thread G3/8	
1/2	Female thread G1/2	
1	Female thread G1	

chanhvinh.com

chanhvinh.com

Datasheet

General technical data

Pneumatic connection	G1/4	G3/8	G1/2	G1
Size	G1/4	G3/8	G1/2	G1
Mounting position	Vertical +/-5°			
Grade of filtration	1 µm			
Condensate drain	Manually rotating			
Flow rate to atmosphere	≥4000 l/min	≥4700 l/min	6,000 l/min	12,500 l/min
Sound pressure level	78 dB(A)		83 dB(A)	93 dB(A)
Noise reduction	Reduction by 40 dB			

Function

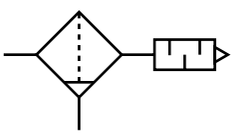

Operating and environmental conditions

Pneumatic connection	G1/4	G3/8	G1/2	G1
Operating pressure	0 ... 1.6 MPa			
Operating pressure	0 ... 16 bar			
Operating pressure	0 ... 232 psi			
Operating medium	Compressed air to ISO 8573-1:2010 [7:4:4]			
Note on operating and pilot medium	Lubricated operation possible (in which case lubricated operation will always be required)			
Ambient temperature	-10 ... 60°C			
Corrosion resistance class CRC [1]	2 - Moderate corrosion stress		1 - Low corrosion stress	

1) More information www.festo.com/x/topic/crc

Materials

Material housing	Brass, nickel-plated, PP
Note on materials	RoHS-compliant
LABS (PWIS) conformity	VDMA24364-B1/B2-L

chanhvinh.com

Dimensions

Dimensions – Filter silencer LFU Download CAD data www.festo.com

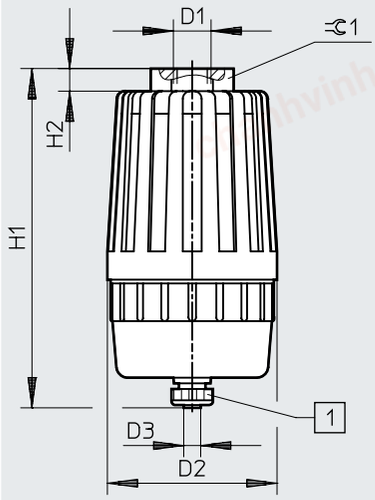

[1] Manual condensate drain

	D1	D2	H1	H2	⫧1
LFU-1/4	G1/4	77	131	7	26
LFU-3/8	G3/8	77	131	7	26
LFU-1/2	G1/2	90	180	12	36
LFU-1	G1	110	252	15	50

1) Note: This product complies with ISO 1179-1 and ISO 228-1.

chanhvinh.com

Dimensions

Dimensions – Filter cartridge LFPU Download CAD data www.festo.com

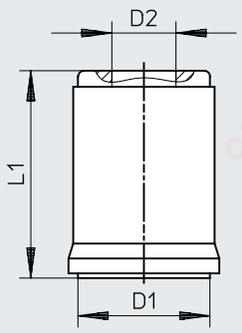

	D1 ø	D2 ø	L1
LFPU-1/4-3/8	60	28	69
LFPU-1/2	70	34,8	110
LFPU-1	82	42,8	180

chanhvinh.com

Ordering data

Ordering data

	Pneumatic connection	Flow rate to atmosphere	Product weight	Part no.	Type
	G1/4	4,000 l/min	190 g	**539132**	**LFU-1/4**
	G3/8	4,700 l/min		**539133**	**LFU-3/8**
	G1/2	6,000 l/min	450 g	**10494**	**LFU-1/2**
	G1	12,500 l/min	910 g	**10495**	**LFU-1**

chanhvinh.com

Accessories

Filter cartridges LFPU

	Description	Corrosion resistance class CRC	LABS (PWIS) conformity	Product weight	Part no.	Type
	For connection G1/2		VDMA24364-B1/B2-L	200 g	**10496**	**LFPU-1/2**
	For connection G1			330 g	**10497**	**LFPU-1**
	For connection G1/4, G3/8	2 - Moderate corrosion stress		120 g	**539134**	**LFPU-1/4-3/8**