chanhvinh.com

Multiple connectors KSV, KDVF



chanhvinh.com

Characteristics

At a glance

The plug and socket connections are numbered, and a locating lug prevents them from being incorrectly matched during coupling. The coupling is tightened and secured with a retaining ring. The multi-plug has a half-shell housing to accommodate a protective conduit. An additional inner grommet provides strain relief for the tubing and protects it from damage.

chanhvinh.com chanhvinh.com chanhvinh.com chanhvinh.com chanhvinh.com chanhvinh.com

chanhvinh.com

Type code

001	Series	
KSV	Multi-plug	
KSV6	Multiple connector	
KDVF6	Multi-socket	
KDV	Terminal socket	
KDVF	Multi-socket	

002	Max. connections	
	1	
5	5	
7	7	
8	8	
12	12	
16	16	
22	22	
32	32	

003	Connection type	
	Standard	
PK	Barbed connector	

004	Connection size	
	Standard	
2	2	
3	3	
4	4	
6	6	

005	Generation	
	First generation	
B	Second generation	

chanhvinh.com

Datasheet

General technical data							
Max. number of connections	5	7	8	12	16	22	32
Short type code	KSV, KDVF	KSV6, KDVF6	KSV, KDVF	KSV6, KDVF6	KDVF, KSV	KSV6, KDVF6	KDVF, KSV
Pneumatic connection	PK-2 PK-3 PK-4	PK-6	PK-2 PK-3 PK-4	PK-6	PK-2 PK-3 PK-4	PK-6	PK-2 PK-3 PK-4
Nominal size	4 mm	6 mm	4 mm	6 mm	4 mm	6 mm	4 mm

Operating and environmental conditions		
Nominal size	4 mm	6 mm
Operating pressure	-0.95 ... 16 bar	-0.95 ... 10 bar
Operating medium	Compressed air to ISO 8573-1:2010 [7:-:-]	
Note on operating and pilot medium	Lubricated operation possible (in which case lubricated operation will always be required)	
Ambient temperature	-10 ... 60°C	
Media temperature	-10 ... 60°C	
Corrosion resistance class CRC [1]	2 - Moderate corrosion stress	

1) More information www.festo.com/x/topic/crc

Materials	
Colour	grey
Note on materials	RoHS-compliant
LABS (PWIS) conformity	VDMA24364-B1/B2-L

chanhvinh.com

Dimensions

Dimensions – KSV (Multi-plug), KDVF (Multi-socket) Download CAD data ➔ www.festo.com

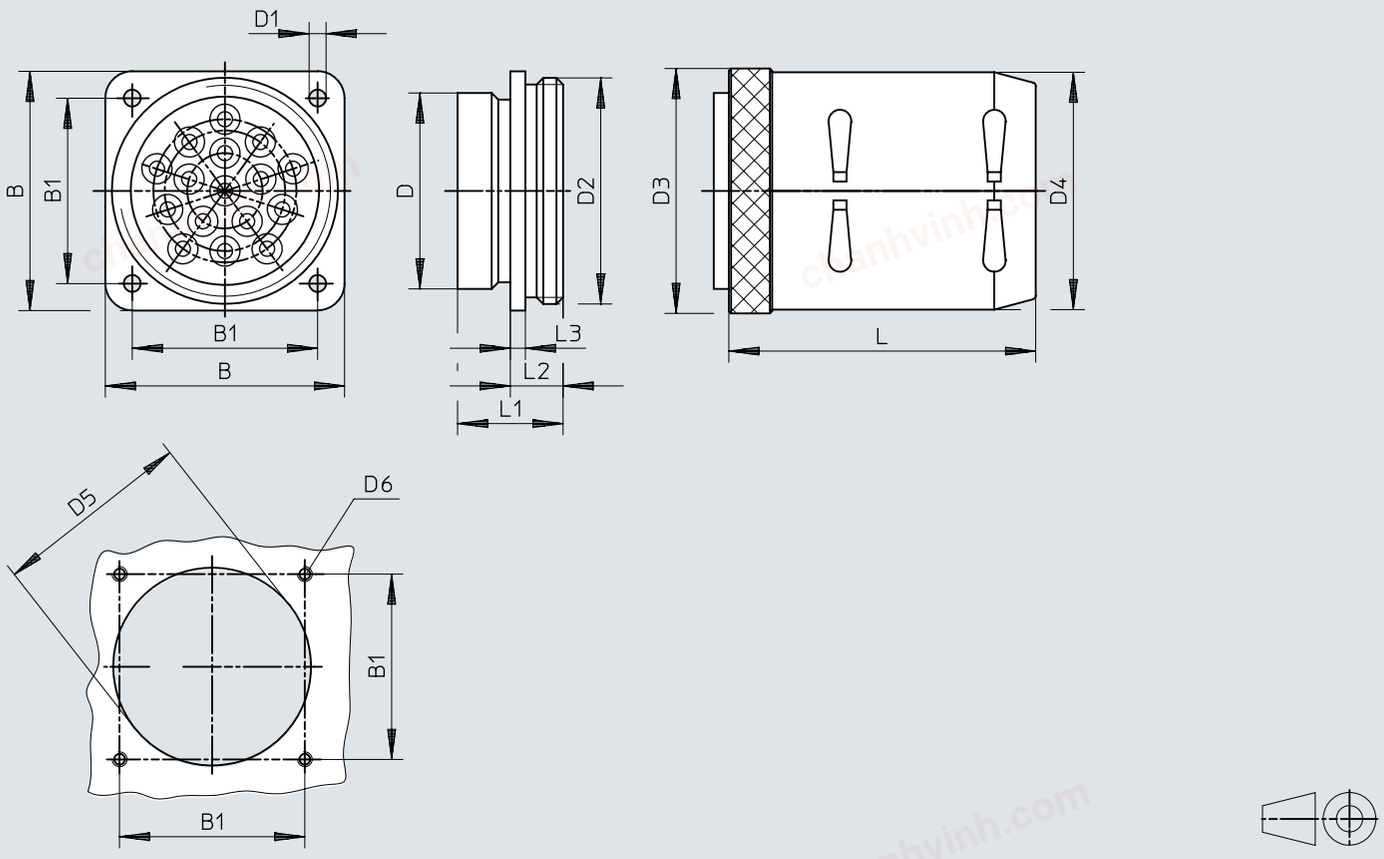

		B	B1	D ø	D1 ø	D2	D3 ø	D4 ø	D5 min.	D6	L	L1	L2	L3
KSV-5	KDVF-5	41,2	31,7	30	4,5	M36x1,5	42	40	30,5	M4	71	23,5	13,5	3,5
KSV-8	KDVF-8	50,8	39,6	40	4,5	M45x1,5	50	50	40,5	M4	77	23,5	13,5	3,5
KSV-16-B	KDVF-16-B	63,5	49,2	52	4,5	M60x1,5	65	63	52,5	M4	82	28	14	4
KSV-32-B	KDVF-32-B	82,6	66,6	70	6,6	M80x1,5	88	80	70,5	M6	82	29	15	4
KSV6-7	KDVF6-7	50,8	39,6	40	4,5	M45x1,5	50	50	40,5	M4	77	23,5	13,5	3,5
KSV6-12	KDVF6-12	63,5	49,2	52	4,5	M60x1,5	65	63	52,5	M4	82	28	14	4
KSV6-22	KDVF6-22	82,6	66,6	70	6,6	M80x1,5	88	80	70,5	M6	87	29	15	4

chanhvinh.com

Ordering data

Ordering data – Multi-plug

	Max. number of connections	Pneumatic connection	Product weight	Part no.	Type
	5	PK-2, PK-3, PK-4	92 g	**7557**	**KSV-5**
	7	PK-6		**152506**	**KSV6-7**
	8	PK-2, PK-3, PK-4	128 g	**7558**	**KSV-8**
	12	PK-6		**152507**	**KSV6-12**
	16	PK-2, PK-3, PK-4	223 g	**7559**	**KSV-16-B**
	22	PK-6		**152508**	**KSV6-22**
	32	PK-2, PK-3, PK-4	374 g	**7560**	**KSV-32-B**

Ordering information – Multi-socket

	Max. number of connections	Pneumatic connection	Product weight	Part no.	Type
	5	PK-2, PK-3, PK-4	21 g	**7562**	**KDVF-5**
	7	PK-6		**152509**	**KDVF6-7**
	8	PK-2, PK-3, PK-4	36 g	**7563**	**KDVF-8**
	12	PK-6		**152510**	**KDVF6-12**
	16	PK-2, PK-3, PK-4	64 g	**7564**	**KDVF-16-B**
	22	PK-6		**152511**	**KDVF6-22**
	32	PK-2, PK-3, PK-4	131 g	**7565**	**KDVF-32-B**

chanhvinh.com

chanhvinh.com

Accessories

Terminal plug

	Pneumatic connection	Nominal size	Corrosion resistance class CRC [1]	Packaging unit [units]	Part no.	Type
	For tubing outside diameter of 3 mm	1.5 mm	1 - Low corrosion stress	10	**33384**	**KSV-PK-2**
	For tubing O.D. 4 mm	2.5 mm			**7215**	**KSV-PK-3**
	For tubing O.D. 6 mm	3.4 mm			**7216**	**KSV-PK-4**
	For tubing O.D. 8 mm	5.3 mm			**117945**	**KSV6-PK-6**

1) More information: www.festo.com/x/topic/crc

Terminal socket

	Pneumatic connection	Nominal size	Corrosion resistance class CRC [1]	Packaging unit [units]	Part no.	Type
	For tubing outside diameter of 3 mm	1.5 mm	1 - Low corrosion stress	10	**244937**	**KDV-PK-2**
	For tubing O.D. 4 mm	2.5 mm			**208378**	**KDV-PK-3**
	For tubing O.D. 6 mm	3.4 mm			**208380**	**KDV-PK-4**
	For tubing O.D. 8 mm	5.3 mm			**337348**	**KDV6-PK-6**

1) More information: www.festo.com/x/topic/crc