chanhvinh.com

On/off valve, electric HEE



chanhvinh.com

Characteristics

At a glance

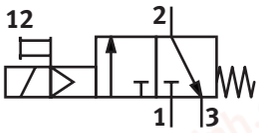

Electric on/off valve for pressurising and exhausting pneumatic systems.

- With solenoid coil, without plug socket
- 3 voltage ranges can be selected
- Ducted exhaust is possible via a threaded connection with silencer
- Manual override, non-detenting and detenting (using override tool AHB-MD/MF/MV)
- Solenoid actuator can be repositioned by 4 x 90°

Version

[D]	D series, metal

Sturdy in full metal design for the specific requirements of the process automation industry

chanhvinh.com

Type code

001	Series	
HEE	On/off valve, electric	

002	Pneumatic connection	
	None	
1/8	Female thread G1/8	
1/4	Female thread G1/4	
3/8	Female thread G3/8	
1/2	Female thread G1/2	
3/4	Female thread G3/4	
1	Female thread G1	

003	Version	
D	D series, metal	

004	Size	
MINI	Grid dimension 40 mm (without connecting plates)	
MIDI	Grid dimension 55 mm (without connecting plates)	
MAXI	Grid dimension 66 mm (without connecting plates)	

005	Rated operating voltage	
24	24 V DC	
110	110 V AC	
230	230 V AC	

chanhvinh.com

Datasheet

General technical data

Size	Grid dimension 40 mm (without connecting plates)	Grid dimension 55 mm (without connecting plates)	Grid dimension 66 mm (without connecting plates)
Pneumatic connection, port 1 [1]	G1/8, G1/4, G3/8, 1/8 NPT, 1/4 NPT, 3/8 NPT	G1/4, G3/8, G1/2, G3/4, 3/8 NPT, 1/2 NPT, 3/4 NPT	G1/2, G3/4, G1, 3/4 NPT, 1 NPT
Pneumatic connection, port 2	G1/8, G1/4, G3/8, 1/8 NPT, 1/4 NPT, 3/8 NPT	G1/4, G3/8, G1/2, G3/4, 3/8 NPT, 1/2 NPT, 3/4 NPT	G1/2, G3/4, G1, 3/4 NPT, 1 NPT
Pneumatic connection, port 3	G1/8	G1/4	G3/8
Design	Piston gate valve		
lap	Overlap		
Type of mounting	In-line installation, With accessories		
Mounting position	optional		
Valve function	3/2-way, closed, monostable		
Exhaust-air function	Without flow control option		
Manual override	Detenting		
Type of reset	Mechanical spring		
Type of piloting	Pilot actuated		

1) NPT thread for North America only

Electrical data

Pneumatic connection, port 1	G1/8	G1/4		G3/8		G1/2		G3/4		G1	
Characteristic coil data	230 V AC: 50/60 Hz, pick-up power 5.0 VA, holding power 3.7 VA	24 V DC: 2.5 W		230 V AC: 50/60 Hz, pick-up power 5.0 VA, holding power 3.7 VA	24 V DC: 2.5 W	230 V AC: 50/60 Hz, pick-up power 5.0 VA, holding power 3.7 VA	24 V DC: 2.5 W	230 V AC: 50/60 Hz, pick-up power 5.0 VA, holding power 3.7 VA	24 V DC: 2.5 W	230 V AC: 50/60 Hz, pick-up power 5.0 VA, holding power 3.7 VA	24 V DC: 2.5 W
Permissible voltage fluctuations	-14% / +10%	+/- 10%		-14% / +10%	+/- 10%	-14% / +10%	+/- 10%	-14% / +10%	+/- 10%	-14% / +10%	+/- 10%
Switch-on time	–										
Electrical connection	Type C Plugs To DIN EN 175301-803										

Flow characteristics

Pneumatic connection, port 1	G1/8	G1/4		G3/8		G1/2		G3/4		G1
Pneumatic connection, port 3	G1/8		G1/4	G1/8	G1/4		G3/8	G1/4	G3/8	
Standard nominal flow rate (standardised to DIN 1343)[1]	1,000 l/min	1,500 l/min	2,400 l/min	1,600 l/min	3,200 l/min	3,600 l/min	5,600 l/min	3,800 l/min	6,000 l/min	6,500 l/min
C value	4.4 l/sbar	7 l/sbar		7.3 l/sbar	15.7 l/sbar	17 l/sbar	24.2 l/sbar	17.3 l/sbar	28 l/sbar	27.6 l/sbar
b value	0.44	0.31	0.47	0.28	0.33	0.3		0.41	0.32	

1) Measured at p1 = 6 bar and p2 = 5 bar, Δp = 1 bar.

Characteristic flow rate – NPT thread (only for North America)

Pneumatic connection, port 1	1/8 NPT	1/4 NPT	3/8 NPT		1/2 NPT	3/4 NPT		1 NPT
Pneumatic connection, port 3	G1/8			G1/4			G3/8	
Standard nominal flow rate (standardised to DIN 1343)[1]	1,000 l/min	1,500 l/min	1,600 l/min	3,200 l/min	3,600 l/min	3,800 l/min	6,000 l/min	6,500 l/min
C value	4.4 l/sbar	7 l/sbar	7.3 l/sbar	15.7 l/sbar	17 l/sbar	17.3 l/sbar	28 l/sbar	27.6 l/sbar
b value	0.44	0.31	0.28	0.33	0.3	0.41	0.32	

1) Measured at p1 = 6 bar and p2 = 5 bar, Δp = 1 bar.

chanhvinh.com

Datasheet

Operating and environmental conditions	
Operating pressure	0.25 ... 1.6 MPa
Operating pressure	2.5 ... 16 bar
Operating medium	Compressed air to ISO 8573-1:2010 [7:4:4], Inert gases
Note on operating and pilot medium	Lubricated operation possible (in which case lubricated operation will always be required)
Ambient temperature	-10 ... 60°C
Media temperature	-10 ... 60°C
Corrosion resistance class CRC [1)]	2 - Moderate corrosion stress

1) Corrosion resistance class CRC 1 to Festo standard FN 940070. Low corrosion stress. Dry indoor application or transport and storage protection. Also applies to parts behind covers, in the non-visible interior area, or parts which are covered in the application (e.g. drive trunnions).

Materials	
Material housing	Die-cast aluminium
Material seals	NBR
Note on materials	RoHS-compliant
LABS (PWIS) conformity	VDMA24364-B1/B2-L

Dimensions

Dimensions – Mini/Midi/Maxi, with connecting plates with threaded connection

Download CAD data www.festo.com

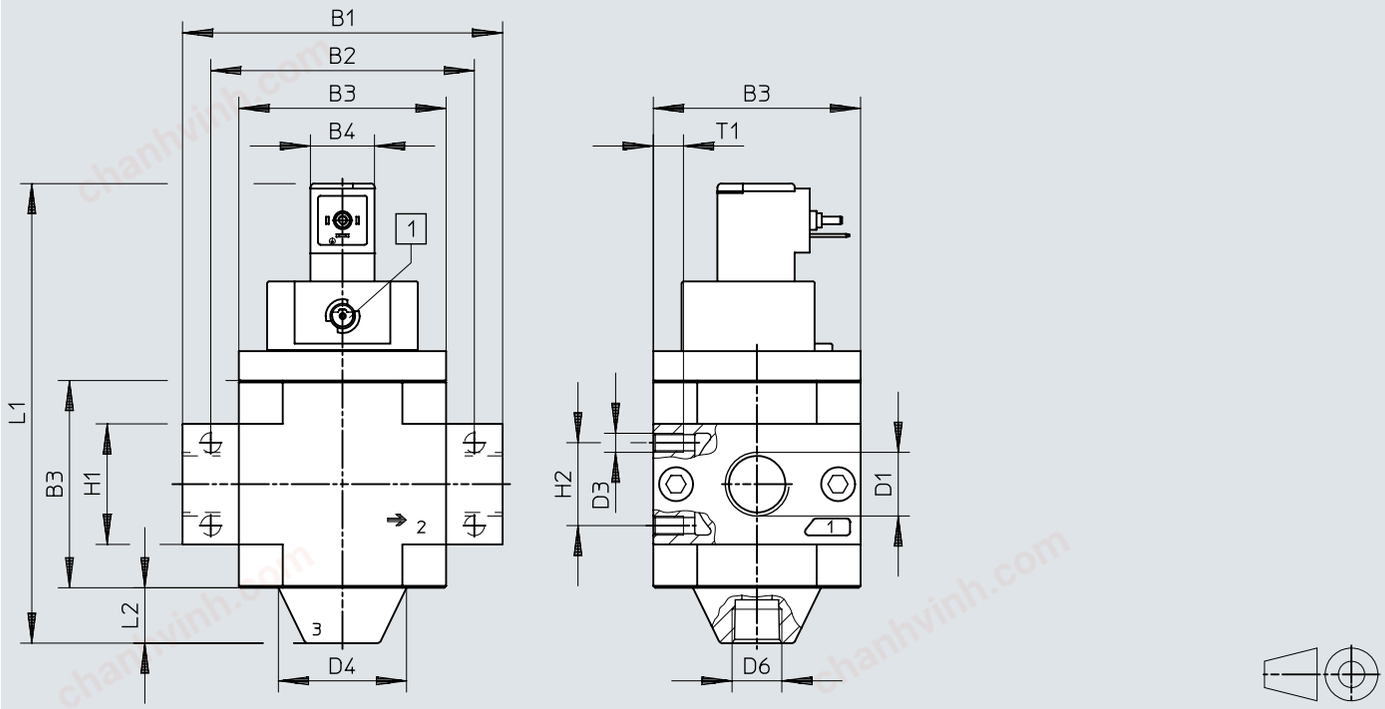

[1] Manual override

	B3	B4	B5	B6	D2 ø	D3	D4 ø	D6	L1	L2	T2
HEE-D-MINI	40	17	30	5,8	11	M4	24	G1/8	104	11	10
HEE-D-MIDI	55	17	43	6,8	24	M5	34	G1/4	122	14	11
HEE-D-MAXI	66	17	46	6,8	30	M5	38	G3/8	135	16	11

chanhvinh.com

Dimensions

Dimensions – Mini/Midi/Maxi, without connecting plates Download CAD data www.festo.com

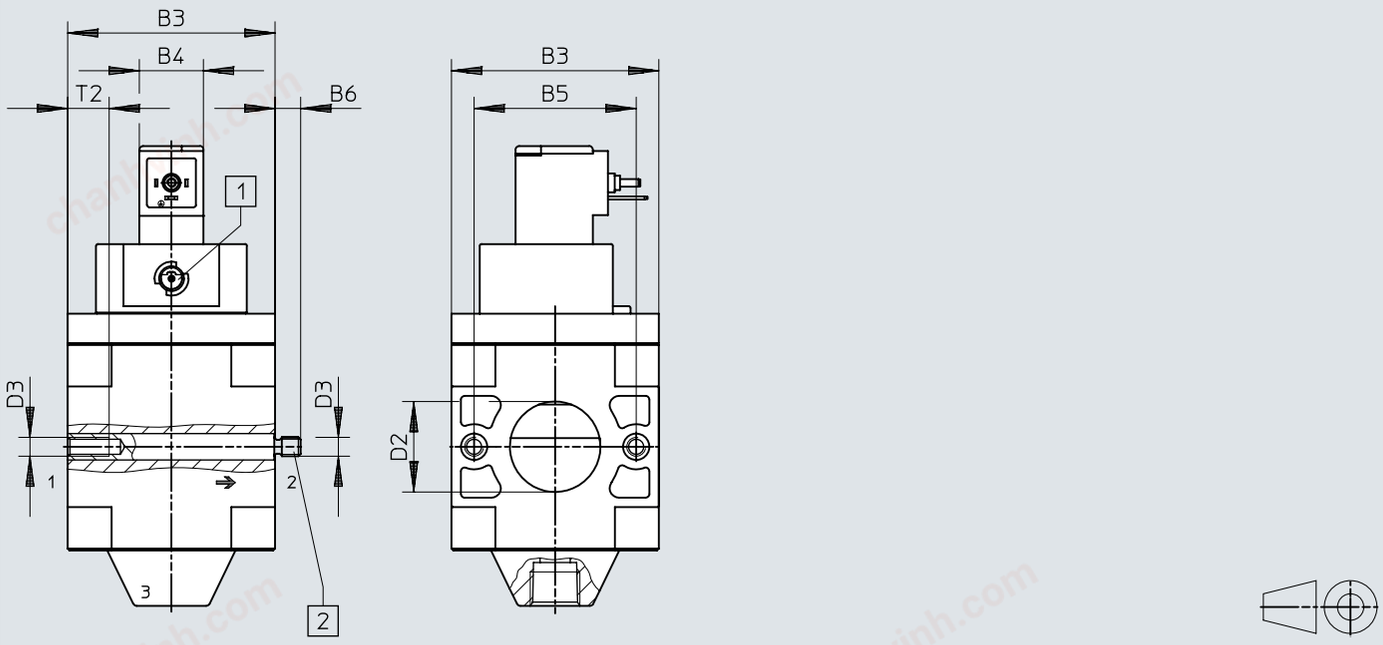

[1] Manual override
[2] Threaded bolt (exchangeable)

	B1	B2	B3	B4	B5	D1	D3	D4 ø	D6	H1	H2	L1	L2	T1
HEE-1/8-D-MINI	64	52	40	17	30	G1/8	M4	24	G1/8	20	11	104	11	7
HEE-1/4-D-MINI						G1/4								
HEE-3/8-D-MINI	70					G3/8								
HEE-1/4-D-MIDI	85	70	55	17	43	G1/4	M5	34	G1/4	32	22	122	14	8
HEE-3/8-D-MIDI						G3/8								
HEE-1/2-D-MIDI						G1/2								
HEE-3/4-D-MIDI						G3/4								
HEE-1/2-D-MAXI	96	80	66	17	46	G1/2	M5	38	G3/8	32	22	135	16	8
HEE-3/4-D-MAXI						G3/4								
HEE-1-D-MAXI	116	91				G1				40				

1) Note: This product complies with ISO 1179-1 and ISO 228-1.

chanhvinh.com

Ordering data

Ordering data – metric threads

Pneumatic connection, port 1 [1]	Pneumatic connection, port 2 [2]	Pneumatic connection, port 3	Characteristic coil data	Product weight	Part no.	Type
			24 V DC: 2.5 W		**165068**	**HEE-1/8-D-MINI-24**
		G1/8	110 V AC: 50/60 Hz, pick-up power 5.0 VA, holding power 3.7 VA	223 g	**172957**	**HEE-D-MINI-110**
			230 V AC: 50/60 Hz, pick-up power 5.0 VA, holding power 3.7 VA		**172958**	**HEE-D-MINI-230**
			24 V DC: 2.5 W		**172956**	**HEE-D-MINI-24**
		G1/4	110 V AC: 50/60 Hz, pick-up power 5.0 VA, holding power 3.7 VA	500 g	**172960**	**HEE-D-MIDI-110**
			230 V AC: 50/60 Hz, pick-up power 5.0 VA, holding power 3.7 VA		**172961**	**HEE-D-MIDI-230**
			24 V DC: 2.5 W		**172959**	**HEE-D-MIDI-24**
		G3/8	110 V AC: 50/60 Hz, pick-up power 5.0 VA, holding power 3.7 VA	800 g	**172963**	**HEE-D-MAXI-110**
			230 V AC: 50/60 Hz, pick-up power 5.0 VA, holding power 3.7 VA		**172964**	**HEE-D-MAXI-230**
			24 V DC: 2.5 W		**172962**	**HEE-D-MAXI-24**
G1/8	G1/8	G1/8	230 V AC: 50/60 Hz, pick-up power 5.0 VA, holding power 3.7 VA	223 g	**165070**	**HEE-1/8-D-MINI-230**
G1/4	G1/4				**165073**	**HEE-1/4-D-MINI-230**
			24 V DC: 2.5 W		**165071**	**HEE-1/4-D-MINI-24**
		G1/4	230 V AC: 50/60 Hz, pick-up power 5.0 VA, holding power 3.7 VA	500 g	**186516**	**HEE-1/4-D-MIDI-230**
			24 V DC: 2.5 W		**186515**	**HEE-1/4-D-MIDI-24**
G3/8	G3/8	G1/8	230 V AC: 50/60 Hz, pick-up power 5.0 VA, holding power 3.7 VA	223 g	**172940**	**HEE-3/8-D-MINI-230**
			24 V DC: 2.5 W		**165074**	**HEE-3/8-D-MINI-24**
		G1/4	230 V AC: 50/60 Hz, pick-up power 5.0 VA, holding power 3.7 VA	500 g	**172943**	**HEE-3/8-D-MIDI-230**
			24 V DC: 2.5 W		**172941**	**HEE-3/8-D-MIDI-24**
G1/2	G1/2		230 V AC: 50/60 Hz, pick-up power 5.0 VA, holding power 3.7 VA		**172946**	**HEE-1/2-D-MIDI-230**
			24 V DC: 2.5 W		**172944**	**HEE-1/2-D-MIDI-24**
		G3/8	230 V AC: 50/60 Hz, pick-up power 5.0 VA, holding power 3.7 VA	800 g	**186519**	**HEE-1/2-D-MAXI-230**
			24 V DC: 2.5 W		**186518**	**HEE-1/2-D-MAXI-24**
G3/4	G3/4	G1/4	230 V AC: 50/60 Hz, pick-up power 5.0 VA, holding power 3.7 VA	500 g	**172949**	**HEE-3/4-D-MIDI-230**
			24 V DC: 2.5 W		**172947**	**HEE-3/4-D-MIDI-24**
		G3/8	230 V AC: 50/60 Hz, pick-up power 5.0 VA, holding power 3.7 VA	800 g	**172952**	**HEE-3/4-D-MAXI-230**
			24 V DC: 2.5 W		**172950**	**HEE-3/4-D-MAXI-24**
G1	G1		230 V AC: 50/60 Hz, pick-up power 5.0 VA, holding power 3.7 VA		**172955**	**HEE-1-D-MAXI-230**
			24 V DC: 2.5 W		**172953**	**HEE-1-D-MAXI-24**

1) Connecting plates

2) Connecting plates

chanhvinh.com

Ordering data

Ordering data – NPT thread (only for North America)						
Pneumatic connection, port 1 [1]	Pneumatic connection, port 2 [2]	Pneumatic connection, port 3	Characteristic coil data	Product weight	Part no.	Type
1/8 NPT	1/8 NPT	G1/8	110 V AC: 50/60 Hz, pick-up power 5.0 VA, holding power 3.7 VA	223 g	**173901**	**HEE-1/8-D-MINI-110-NPT**
			24 V DC: 2.5 W		**173900**	**HEE-1/8-D-MINI-24-NPT**
1/4 NPT	1/4 NPT		110 V AC: 50/60 Hz, pick-up power 5.0 VA, holding power 3.7 VA		**173903**	**HEE-1/4-D-MINI-110-NPT**
			24 V DC: 2.5 W		**173902**	**HEE-1/4-D-MINI-24-NPT**
3/8 NPT	3/8 NPT		110 V AC: 50/60 Hz, pick-up power 5.0 VA, holding power 3.7 VA		**173905**	**HEE-3/8-D-MINI-110-NPT**
			24 V DC: 2.5 W		**173904**	**HEE-3/8-D-MINI-24-NPT**
		G1/4	110 V AC: 50/60 Hz, pick-up power 5.0 VA, holding power 3.7 VA	500 g	**173907**	**HEE-3/8-D-MIDI-110-NPT**
			24 V DC: 2.5 W		**173906**	**HEE-3/8-D-MIDI-24-NPT**
1/2 NPT	1/2 NPT		110 V AC: 50/60 Hz, pick-up power 5.0 VA, holding power 3.7 VA		**173909**	**HEE-1/2-D-MIDI-110-NPT**
			24 V DC: 2.5 W		**173908**	**HEE-1/2-D-MIDI-24-NPT**
3/4 NPT	3/4 NPT		110 V AC: 50/60 Hz, pick-up power 5.0 VA, holding power 3.7 VA		**173911**	**HEE-3/4-D-MIDI-110-NPT**
			24 V DC: 2.5 W		**173910**	**HEE-3/4-D-MIDI-24-NPT**
		G3/8	110 V AC: 50/60 Hz, pick-up power 5.0 VA, holding power 3.7 VA	800 g	**173913**	**HEE-3/4-D-MAXI-110-NPT**
			24 V DC: 2.5 W		**173912**	**HEE-3/4-D-MAXI-24-NPT**
1 NPT	1 NPT		110 V AC: 50/60 Hz, pick-up power 5.0 VA, holding power 3.7 VA		**173915**	**HEE-1-D-MAXI-110-NPT**
			24 V DC: 2.5 W		**173914**	**HEE-1-D-MAXI-24-NPT**

1) Connecting plates

2) Connecting plates

chanhvinh.com

Peripherals

Individual unit with connecting plates

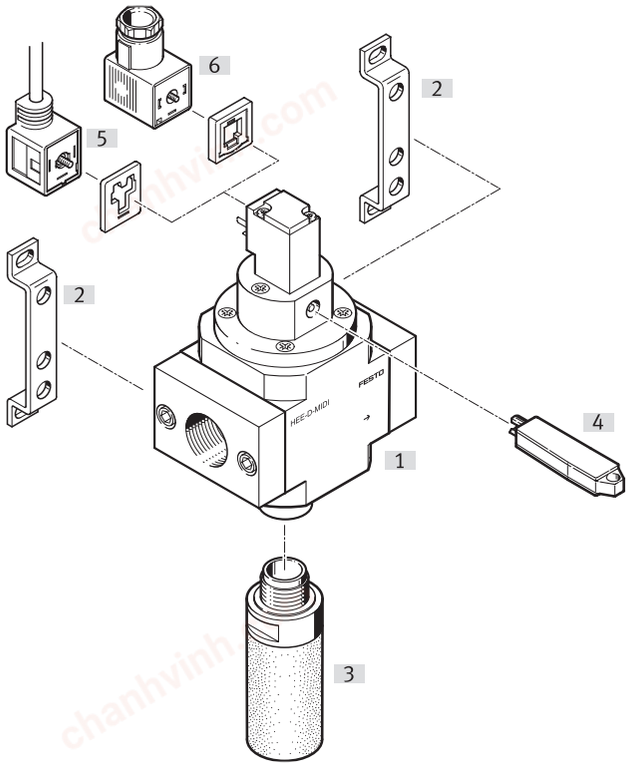

Accessories			→ Link
	Type/order code	Description	
[1]	On/off valve HEE		hee-d
[2]	Mounting bracket HFOE		12
[3]	Silencer U		12
[4]	Manual override AHB-MD/MF/MV		13
[5]	Plug socket with cable KMEB		13
[6]	Plug socket MSSD-EB	For on/off valve MS...-V24P and MS...-V24-...-EX2, the plug socket is included in the scope of delivery.	12

chanhvinh.com

Peripherals

Individual unit without connecting plates, for service unit combination

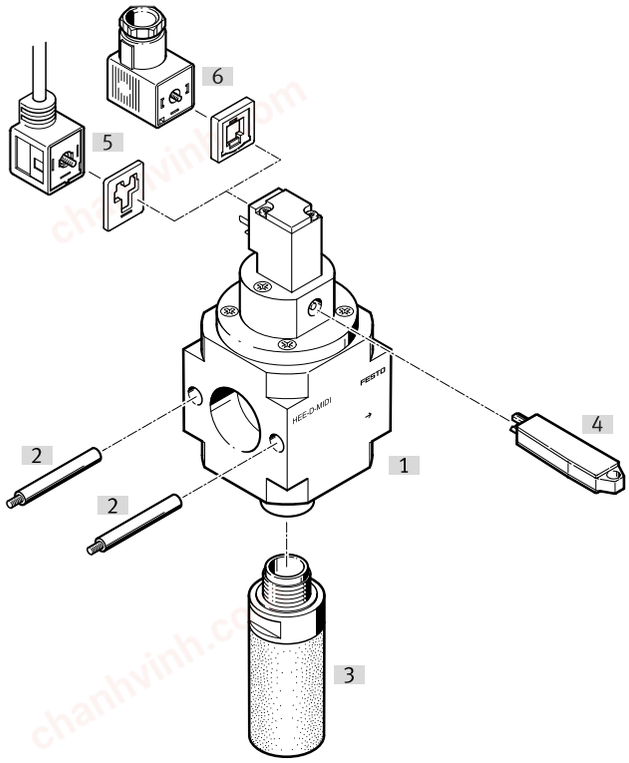

Accessories			→ Link
	Type/order code	Description	
[1]	On/off valve HEE		hee-d
[2]	Threaded bolt FRB	Included in the scope of delivery	12
[3]	Silencer U		12
[4]	Manual override AHB-MD/MF/MV		13
[5]	Plug socket with cable KMEB		13
[6]	Plug socket MSSD-EB	For on/off valve MS...-V24P and MS...-V24-...-EX2, the plug socket is included in the scope of delivery.	12

chanhvinh.com

Accessories

Mounting bracket HFOE

	Corrosion resistance class CRC [1]	LABS (PWIS) conformity	Product weight	Part no.	Type
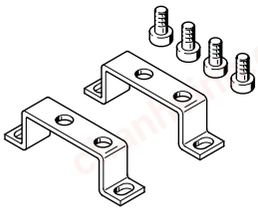	2 - Moderate corrosion stress	VDMA24364-B2-L	66 g	**159593**	**HFOE-D-MIDI/MAXI**
		VDMA24364-B1/B2-L		**159638**	**HFOE-D-MINI**

1) More information: www.festo.com/x/topic/kbk

Threaded bolt FRB

	Size	Part no.	Type
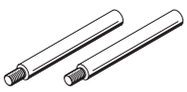	Grid dimension 40 mm (without sub-bases)	**159642**	**FRB-D-MINI**
	Grid dimension 55 mm (without sub-bases)	**159595**	**FRB-D-MIDI**
	Grid dimension 66 mm (without sub-bases)	**159643**	**FRB-D-MAXI**

Silencer U

	Pneumatic connection	Flow rate to atmosphere	Sound pressure level	Product weight	Part no.	Type
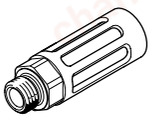	G1/8	1,340 l/min	74 dB(A)	8 g	**6841**	**U-1/8-B**
	G1/4	2,440 l/min	80 dB(A)	17 g	**6842**	**U-1/4-B**
	G3/8	5,800 l/min		37 g	**6843**	**U-3/8-B**
	G1/2	7,500 l/min	81 dB(A)	75 g	**6844**	**U-1/2-B**
	G3/4	10,000 l/min	83 dB(A)	120 g	**6845**	**U-3/4-B**
	G1	17,500 l/min	85 dB(A)	233 g	**151990**	**U-1-B**

Illuminating seal MEB-LD

	Operational voltage range DC	Switching position indicator	Product weight	Part no.	Type
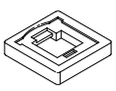	12 ... 24 V	LED	0.6 g	**151717**	**MEB-LD-12-24DC**

Plug socket MSSD-EB

	Electrical connection	Type of mounting	Product weight	Part no.	Type
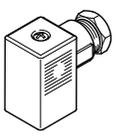	3-pin, Socket, Angled socket, Type C, To DIN EN 175301-803, To DIN EN 61984, Square design MSEB, Square design MSN2	On solenoid valve via M2.5 central screw	11 g	**151687**	**MSSD-EB**

chanhvinh.com

Accessories

Plug socket with cable KMEB

	Nominal operating voltage DC	Electrical connection 2, number of connections/ cores	Signal status display	Cable length	Part no.	Type
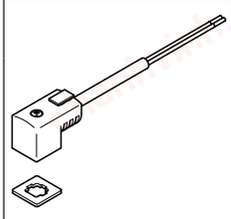		3		2.5 m	**151690**	**KMEB-1-230AC-2.5**
				5 m	**151691**	**KMEB-1-230AC-5**
	24 V		Yellow LED	2.5 m	**151688**	**KMEB-1-24-2.5-LED**
				5 m	**151689**	**KMEB-1-24-5-LED**
				10 m	**193457**	**KMEB-1-24-10-LED**

Manual override AHB-MD/MF/MV

	Type of mounting	Part no.	Type
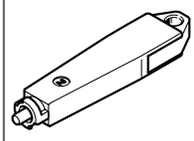	Snapping in	**157651**	**AHB-MD/MF/MV**