chanhvinh.com

Rotary distributor GF

FESTO



chanhvinh.com

chanhvinh.com

Characteristics

At a glance

The rotary distributors GF with single or multiple rotary through-feeds transmit media from stationary sources to rotating machine parts.
The compact and sturdy design with double ball bearing makes the rotary distributors a reliable means of protecting your media supply against mechanical loads.
The rotary distributors with multiple rotary through-feed provide a flexible way of supplying and returning the medium through the radial and axial inputs and outputs.

Notes:

- The rotary distributor should only be secured against twisting at the shaft [1] and housing [2] mounting points. The shaft and housing should not be tensioned against one other because this would overload the double ball bearing.
- Technical advice is required for applications below 0°C or when there is more than one parameter in the threshold range. Please contact our Technical Department.
- The maximum temperature of +80°C must not be exceeded. The frictional heat resulting from the rotation must be dissipated via the medium; sufficient media flow must therefore be ensured.
- In the event of rapid oscillating movements (changes in direction < 2 seconds), the service life will be roughly halved.
- When using rotational speeds above 1,000 rpm, only lubricated compressed air must be used. If no lubricated compressed air is available, the depot lubrication must be replaced every 300 operating hours.

Number of air through-feeds

The rotary distributor is available in two different versions:

- Single rotary through-feed with 1 input and 4 outputs
- Multiple rotary through-feeds with 2 separate inputs and outputs

chanhvinh.com

Type code

001	Series	
GF	Rotary distributor	

002	Pneumatic connection	
1/8	Female thread G1/8	
1/4	Female thread G1/4	
1/2	Female thread G1/2	
3/8	Female thread G3/8	

003	Pneumatic connection 2	
	None	
M5	Male thread M5	
1/8	Male thread G1/8	
1/4	Male thread G1/4	

004	Number of air through-feeds	
2	Air through-feeds	

chanhvinh.com

Datasheet

General technical data – Single rotary through-feed (round design)

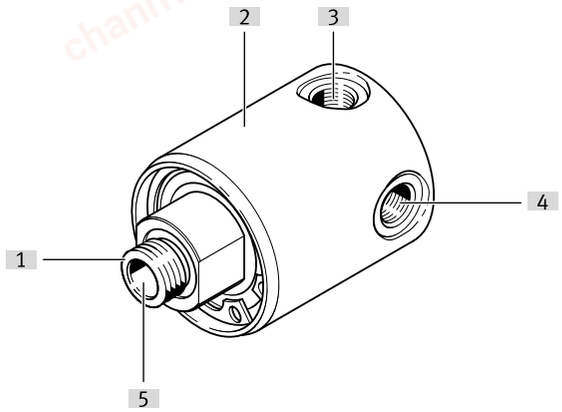

[1] – Shaft mounting points
[2] – Housing
[3] – Output 2.1
[4] – Output 2.4
[5] – Input 1

Pneumatic connection, port 1	G1/8	G1/4	G1/2
Pneumatic connection, port 2	M5	G1/8	G1/4
Nominal size	4.1 mm	8 mm	15 mm
Mounting position	optional		
Max. rotational speed	3,000 rpm		2,500 rpm
Max. radial force	150 N		250 N
Max. axial force	50 N		
Nominal torque	1.22 Nm	1.65 Nm	4.25 Nm
Tolerance for nominal tightening torque	± 20%		
Max. tightening torque	1.95 Nm	2.8 Nm	8 Nm

chanhvinh.com

Datasheet

General technical data – Single rotary through-feed (angular design)

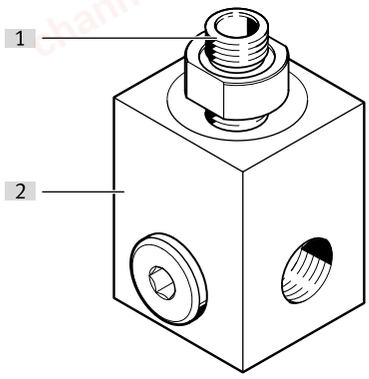

[1] – Shaft mounting points
[2] – Housing

Pneumatic connection, port 1	Male thread G1/4	Male thread G3/8
Pneumatic connection, port 2	Female thread G1/4	Female thread G3/8
Nominal size	11.5 mm	15 mm
Mounting position	optional	
Max. rotational speed	300 rpm	
Standard flow rate 1-2.1 (6->0)	–	
Standard flow rate 1-2.X open (6->0)	–	
Standard nominal flow rate 1.1-2.1	–	

chanhvinh.com

Datasheet

General technical data – Multiple rotary through-feeds

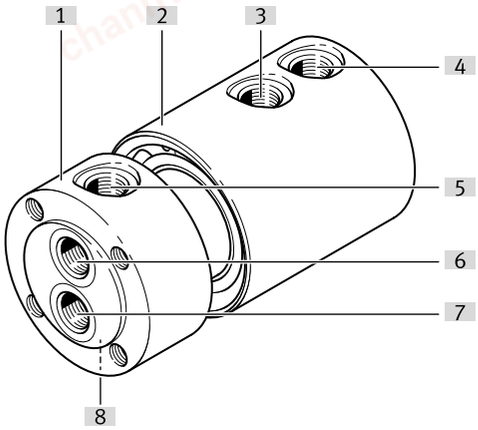

[1] – Shaft mounting points
[2] – Housing
[3] – Output 2.1
[4] – Output 2.2
[5] – Radial input 1.1
[6] – Axial input 1.1
[7] – Axial input 1.2
[8] – Radial input 1.2

Pneumatic connection, port 1	G1/8	G1/4	G1/2
Pneumatic connection, port 2	G1/8	G1/4	G1/2
Nominal size	6 mm	8 mm	15 mm
Mounting position	optional		
Max. rotational speed	300 rpm		
Max. radial force	250 N	300 N	400 N
Max. axial force	100 N		

Operating and environmental conditions – single rotary through-feed (round design)

Operating pressure complete temperature range	-0.095 ... 1 MPa
Operating pressure complete temperature range	-0.95 ... 10 bar
Operating pressure complete temperature range	-13.775 ... 145 psi
Operating medium	Compressed air to ISO 8573-1:2010 [7:-:-] Water (liquid, ice-free)
Note on operating and pilot medium	Use 5 µm filter when operating with water Lubricated operation possible
Ambient temperature	-10 ... 80°C
Corrosion resistance class CRC [1)]	1 - Low corrosion stress

1) More information: www.festo.com/x/topic/crc

Operating and environmental conditions – single rotary through-feed (angular design)

Operating pressure complete temperature range	–
Operating pressure complete temperature range	-0.95 ... 10 bar
Operating pressure complete temperature range	–
Operating medium	Compressed air to ISO 8573-1:2010 [7:-:-]
Note on operating and pilot medium	Lubricated operation possible (in which case lubricated operation will always be required)
Ambient temperature	-10 ... 60°C

chanhvinh.com

Datasheet

Operating and environmental conditions – multiple rotary through-feeds	
Operating pressure complete temperature range	-0.095 ... 1 MPa
Operating pressure complete temperature range	-0.95 ... 10 bar
Operating pressure complete temperature range	-13.775 ... 145 psi
Operating medium	Compressed air to ISO 8573-1:2010 [7:-:-] Water (liquid, ice-free)
Note on operating and pilot medium	Use 5 µm filter when operating with water Lubricated operation possible
Ambient temperature	-10 ... 80°C
Corrosion resistance class CRC [1]	1 - Low corrosion stress

1) More information: www.festo.com/x/topic/crc

Materials (round design)	
Material housing	Brass, nickel-plated
Material shaft	High-alloy steel
Note on materials	RoHS-compliant
LABS (PWIS) conformity	VDMA24364-B1/B2-L

Materials (angular design)	
Material housing	Wrought aluminium alloy
Material shaft	High-alloy steel
Note on materials	RoHS-compliant
LABS (PWIS) conformity	VDMA24364-B1/B2-L

chanhvinh.com

Dimensions

Dimensions – Single rotary through-feed (round design) Download CAD data ➔ www.festo.com

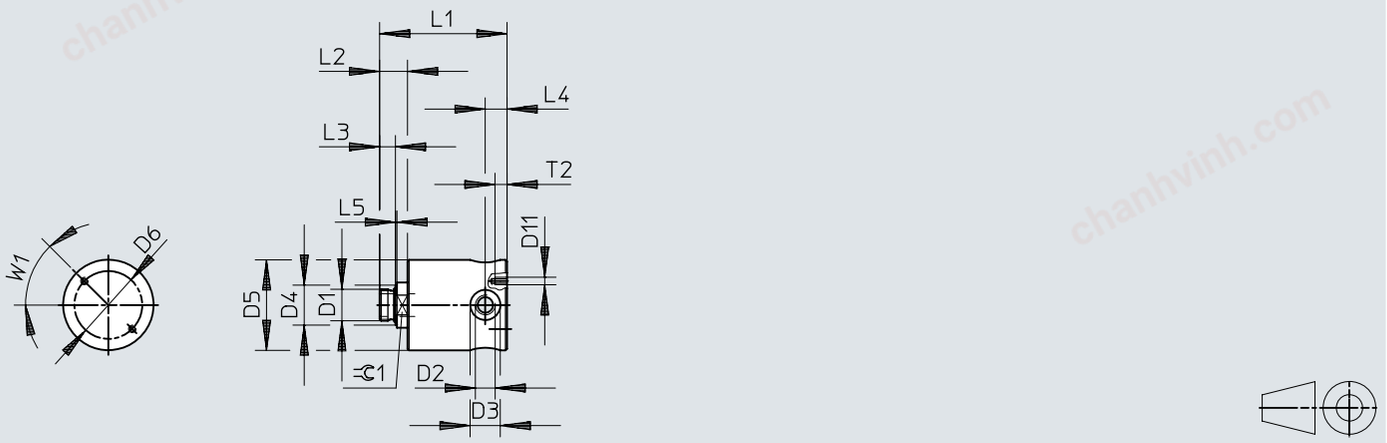

	D1	D2	D3 ø	D4 ø	D5 ø –1	D6 ø	D11	L1	L2	L3	L4	L5	T2	W1	⊂ 1
GF-1/8-M5	G1/8	M5	9	14,5	40	30	M5	64	15,5	6,5	7	1	8	45°	17
GF-1/4-1/8	G1/4	G1/8	16	17	40	30	M5	65,5	17	8	9,5	1,5	8	45°	17
GF-1/2-1/4	G1/2	G1/4	20	26,5	60	45	M5	90	24	10,5	14,5	1,5	8	45°	27

chanhvinh.com

Dimensions

Dimensions – Single rotary through-feed (angular design) Download CAD data ➔ www.festo.com

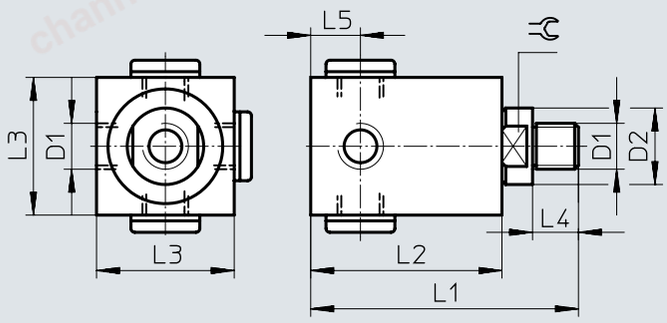

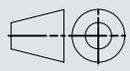

	D1	D2 ø	L1	L2 +0,5	L3	L4 ±0,2	L5 +1,0/–0,5	⊂ 1
GF-1/4	G1/4	20	66,9	50	36	12	12	17
GF-3/8	G3/8	22	70	50	36	12	12	19

chanhvinh.com

Dimensions

Dimensions – Multiple rotary through-feed Download CAD data ➔ www.festo.com

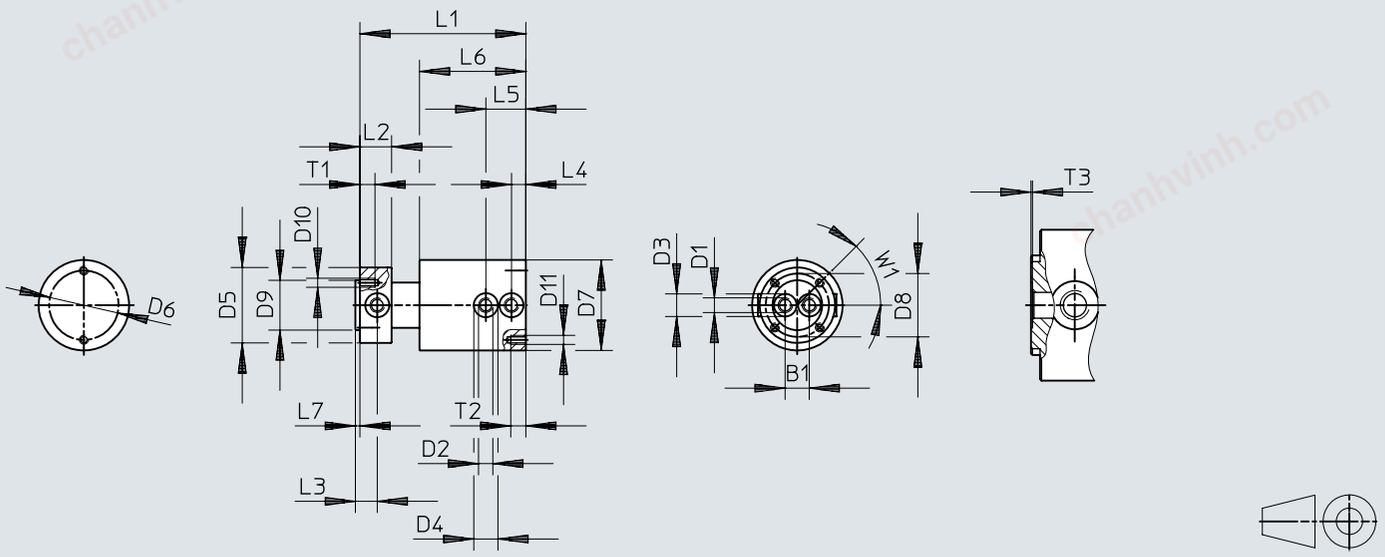

	D1	D2	B1	D3 ø	D4 ø	D5 ø	D6 ø	D7 ø	D8 ø	D9 ø	D10	D11
GF-1/8-2	G1/8	G1/8	16	15	16	50	46	60	42	33	M6	M6
GF-1/4-2	G1/4	G1/4	20	19	20	65	46	70	50	40	M6	M6
GF-1/2-2	G1/2	G1/2	30	28	28	90	65	95	78	65	M6	M6

	D1	D2	L1	L2	L3	L4	L5	L6	L7	T1	T2	T3 –0,2	W1
GF-1/8-2	G1/8	G1/8	110	21	14,5	9,5	26,5	70,5	3	10	10	0,5	45°
GF-1/4-2	G1/4	G1/4	128	28	19,5	13,5	34,5	81,5	3	10	10	0,5	45°
GF-1/2-2	G1/2	G1/2	171	39	25,5	17,5	49,5	112	3	10	10	0,5	45°

chanhvinh.com

Ordering data

Ordering data – Single rotary through-feed (round design)

	Pneumatic connection, port 1	Pneumatic connection, port 2	Nominal size	Product weight	Part no.	Type
	G1/8	M5	4.1 mm	400 g	**539290**	**GF-1/8-M5**
	G1/4	G1/8	8 mm	370 g	**539291**	**GF-1/4-1/8**
	G1/2	G1/4	15 mm	1,190 g	**539292**	**GF-1/2-1/4**

Ordering data – Single rotary through-feed (angular design)

	Pneumatic connection, port 1	Pneumatic connection, port 2	Nominal size	Product weight	Part no.	Type
	Male thread G1/4	Female thread G1/4	11.5 mm		**2094**	**GF-1/4**
	Male thread G3/8	Female thread G3/8	15 mm		**2095**	**GF-3/8**

Ordering data – multiple rotary through-feeds

	Pneumatic connection, port 1	Pneumatic connection, port 2	Nominal size	Product weight	Part no.	Type
	G1/8	G1/8	6 mm	1,770 g	**539287**	**GF-1/8-2**
	G1/4	G1/4	8 mm	2,950 g	**539288**	**GF-1/4-2**
	G1/2	G1/2	15 mm	7,380 g	**539289**	**GF-1/2-2**