chanhvinh.com

# Mandrel coupling EAMD

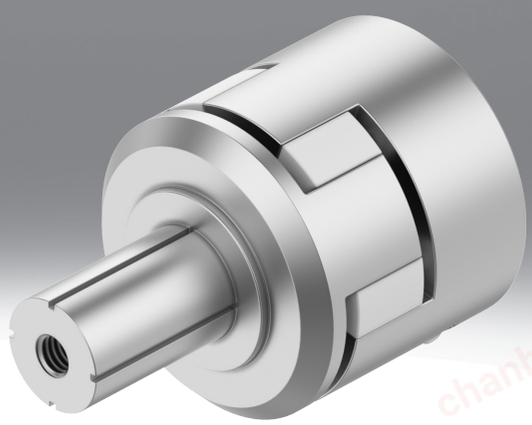

chanhvinh.com



## Characteristics

**Coupling type**

[_] Annular gear coupling



Three-piece coupling with expanding mandrel and clamping hub, suitable for force-locked and backlash-free transmission of medium and high torques between electric motors and axes with a hollow shaft.

chanhvinh.com



## Type code

| 001 | Series | |
|---|---|---|
| **EAMD** | Annular gear coupling with expanding mandrel | |

| 002 | Collar diameter [mm] | |
|---|---|---|
| **16** | 16 | |
| **19** | 19 | |
| **21** | 21 | |
| **25** | 25 | |
| **28** | 28 | |
| **30** | 30 | |
| **32** | 32 | |
| **33** | 33 | |
| **42** | 42 | |
| **56** | 56 | |
| **67** | 67 | |

| 003 | Collar length [mm] | |
|---|---|---|
| **15** | 15 | |
| **22** | 22 | |
| **32** | 32 | |
| **40** | 40 | |
| **46** | 46 | |
| **48** | 48 | |
| **51** | 51 | |
| **54** | 54 | |
| **56** | 56 | |
| **62** | 62 | |
| **65** | 65 | |
| **82** | 82 | |
| **96** | 96 | |

| 004 | Inside diameter 1 | |
|---|---|---|
| **5** | 5 mm | |
| **6** | 6 mm | |
| **6.35** | 6.35 mm | |
| **8** | 8 mm | |
| **9** | 9 mm | |
| **10** | 10 mm | |
| **11** | 11 mm | |
| **12** | 12 mm | |
| **14** | 14 mm | |
| **16** | 16 mm | |
| **18** | 18 mm | |
| **19** | 19 mm | |
| **20** | 20 mm | |
| **22** | 22 mm | |
| **24** | 24 mm | |
| **25** | 25 mm | |
| **32** | 32 mm | |
| **40** | 40 mm | |

| 005 | Expanding mandrel diameter [mm] | |
|---|---|---|
| **8** | 8 | |
| **10** | 10 | |
| **16** | 16 | |
| **23** | 23 | |
| **32** | 32 | |

| 006 | Expanding mandrel length [mm] | |
|---|---|---|
| **X10** | 10 | |
| **X12** | 12 | |
| **X20** | 20 | |
| **X32** | 32 | |
| **X25** | 25 | |
| **X27** | 27 | |

| 007 | Hardness of elastomer insert | |
|---|---|---|
| | Standard | |
| **U** | 64 Sh D | |

chanhvinh.com



# Datasheet

| General technical data – EAMD-16... 21 | | | | | | | | |
|---|---|---|---|---|---|---|---|---|
| Size | 16 | | | | 19 | | 21 | |
| Nominal length | 15 | | | | | | | |
| Inside diameter 1 | 5 mm | 6 mm | 6.35 mm | 8 mm | 9 mm | 10 mm | 11 mm | 12 mm |
| Mass moment of inertia | 0.355 kgmm² | | | | 0.445 kgmm² | | 0.45 kgmm² | |
| Transmittable torque | 1.2 Nm | 1.5 Nm | 1.6 Nm | 2 Nm | | | | |
| Max. rotational speed | 10,000 rpm | | | | | | | |
| Mounting position | optional | | | | | | | |
| Product weight | 13 g | 12.8 g | | 12 g | 13.5 g | 13 g | 13.7 g | 13.5 g |

| General technical data – EAMD-25... 30 | | | | | | | | |
|---|---|---|---|---|---|---|---|---|
| Size | 25 | | | | | | 28 | 30 |
| Nominal length | 22 | | | | | | | |
| Inside diameter 1 | 6.35 mm | 8 mm | 9 mm | 10 mm | 11 mm | 12 mm | 14 mm | 16 mm |
| Mass moment of inertia | 3.2 kgmm² | | | | | | 3.5 kgmm² | 4 kgmm² |
| Transmittable torque | 3.6 Nm | 8 Nm | 9 Nm | | | | | |
| Max. rotational speed | 8,000 rpm | | | | | | | |
| Mounting position | optional | | | | | | | |
| Product weight | 43.7 g | 43.4 g | 43.2 g | 43.7 g | 43.5 g | 42.1 g | 43 g | 44.8 g |

| General technical data – EAMD-32... 33 | | | | | | | |
|---|---|---|---|---|---|---|---|
| Size | 32 | | | | | | 33 |
| Nominal length | 32 | | | | | | 22 |
| Inside diameter 1 | 9 mm | 10 mm | 11 mm | 12 mm | 14 mm | 16 mm | 19 mm |
| Mass moment of inertia | 14.5 kgmm² | | | | | | 4.6 kgmm² |
| Transmittable torque [1] | 12.5 Nm | 16 Nm | 12.5 Nm, 16 Nm | 12.5 Nm | 12.5 Nm, 16 Nm | 12.5 Nm | 9 Nm |
| Max. rotational speed | 8,000 rpm | | | | | | |
| Mounting position | optional | | | | | | |
| Product weight | 127 g | 126 g | | 125 g | 124 g | 123 g | 46.1 g |

1) The values apply to: EAMD-...; EAMD-...-U

| General technical data – EAMD-42 | | | | | | | | | | |
|---|---|---|---|---|---|---|---|---|---|---|
| Size | 42 | | | | | | | | | |
| Nominal length | 40 | | | | | | | | 48 | |
| Inside diameter 1 | 10 mm | 11 mm | 12 mm | 14 mm | 16 mm | 18 mm | 19 mm | 20 mm | 22 mm | 16 mm | 19 mm |
| Mass moment of inertia | 39 kgmm² | 38 kgmm², 39 kgmm² | | 39 kgmm² | 38 kgmm², 39 kgmm² | 39 kgmm² | 38 kgmm², 39 kgmm² | 39 kgmm² | | 45 kgmm² | |
| Transmittable torque [1] | 17 Nm | 17 Nm, 21 Nm | | 21 Nm | 17 Nm, 21 Nm | 17 Nm | 17 Nm, 21 Nm | | 17 Nm | | |
| Max. rotational speed | 6,000 rpm | | | | | | | | | | |
| Mounting position | optional | | | | | | | | | | |
| Product weight | 199 g | 198 g | | 196 g | 194 g | 192 g | 190 g | 189 g | 186 g | 217 g | 212 g |

1) The values apply to: EAMD-...; EAMD-...-U

| General technical data – EAMD-56 | | | | | | | | | | | | |
|---|---|---|---|---|---|---|---|---|---|---|---|---|
| Size | 56 | | | | | | | | | | | |
| Nominal length | 46 | | | | | 46.5 | | | | | | |
| Inside diameter 1 | 16 mm | 19 mm | 20 mm | 22 mm | 24 mm | 14 mm | 18 mm | 19 mm | 20 mm | 24 mm | 25 mm | 32 mm |
| Mass moment of inertia | 151 kgmm² | | | | | | | | | | | |
| Transmittable torque [1] | 47 Nm | 60 Nm | 65 Nm | 72 Nm | 75 Nm | 38 Nm | 57 Nm | 60 Nm | | | 60 Nm, 75 Nm | 60 Nm |
| Max. rotational speed | 5,500 rpm | | | | | | | | | | | |
| Mounting position | optional | | | | | | | | | | | |
| Product weight | 422 g | 418 g | 416 g | 413 g | 409 g | 424 g | 419 g | 418 g | 416 g | 409 g | 407 g | 390 g |

1) The values apply to: EAMD-...; EAMD-...-U

chanhvinh.com



# Datasheet

| General technical data – EAMD-56 | | | | | | |
|---|---|---|---|---|---|---|
| Size | 56 | | | | | |
| Nominal length | 54.5 | | | 56 | | 62.5 |
| Inside diameter 1 | 18 mm | 19 mm | 22 mm | 25 mm | 32 mm | 20 mm |
| Mass moment of inertia | 172 kgmm² | | | | | 192 kgmm² |
| Transmittable torque | 60 Nm | | | 58 Nm | 73 Nm | 60 Nm |
| Max. rotational speed | 5,500 rpm | | | | | |
| Mounting position | optional | | | | | |
| Product weight | 466 g | 464 g | 457 g | 459 g | 435 g | 507 g |

| General technical data – EAMD-67 | | | | | | | | | | | | |
|---|---|---|---|---|---|---|---|---|---|---|---|---|
| Size | 67 | | | | | | | | | | | |
| Nominal length | 51 | | | | | | | 65 | | | 82 | 96 |
| Inside diameter 1 | 16 mm | 19 mm | 20 mm | 22 mm | 24 mm | 25 mm | 32 mm | 25 mm | 32 mm | 40 mm | 24 mm | 25 mm | 32 mm |
| Mass moment of inertia | 374 kgmm² | | | | | | | 430 kgmm² | | | 831 kgmm² | | 886 kgmm² |
| Transmittable torque | 93 Nm | 113 Nm | 120 Nm | 133 Nm | 143 Nm | 150 Nm | 192 Nm | 115 Nm | 145 Nm | 200 Nm | 143 Nm | 150 Nm | 145 Nm |
| Max. rotational speed | 4,500 rpm | | | | | | | | | | | | |
| Mounting position | optional | | | | | | | | | | | | |
| Product weight | 750 g | 745 g | 744 g | 740 g | 736 g | 734 g | 717 g | 844 g | 816 g | 787 g | 1,559 g | 1,557 g | 1,636 g |

| Operating and environmental conditions | |
|---|---|
| Ambient temperature | -25 ... 60°C |
| Storage temperature | -25 ... 60°C |
| Relative air humidity | 0 - 95% |
| LABS (PWIS) conformity | VDMA24364-B2-L |
| Note on materials | RoHS-compliant |

# Dimensions

**Dimensions – EAMD-16/EAMD-19** Download CAD data www.festo.com

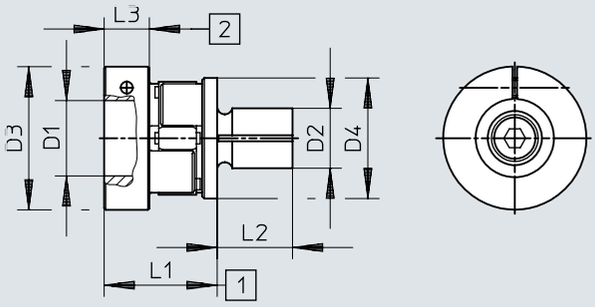




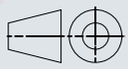

[1] Nominal length with axial offset compensation
[2] Insertion depth

| | D1<br>ø<br>H7 | D2<br>ø<br>H7 | D3<br>ø | D5<br>ø | L1 | L2 | L3 |
|---|---|---|---|---|---|---|---|
| EAMD-16-15-5-8X10 | 5 | 8 | 16 | 17 | 15±1 | 10 | 6,5 |
| EAMD-16-15-6-8X10 | 6 | 8 | 16 | 17 | 15±1 | 10 | 6,5 |
| EAMD-16-15-6.35-8X10 | 6,35 | 8 | 16 | 17 | 15±1 | 10 | 6,5 |
| EAMD-16-15-8-8X10 | 8 | 8 | 16 | 17 | 15±1 | 10 | 6,5 |
| EAMD-19-15-9-8X10 | 9 | 8 | 19 | 19 | 15±1 | 10 | 6,5 |
| EAMD-19-15-10-8X10 | 10 | 8 | 19 | 19 | 15±1 | 10 | 6,5 |

chanhvinh.com



## Dimensions

**Dimensions – EAMD-21...42** Download CAD data www.festo.com

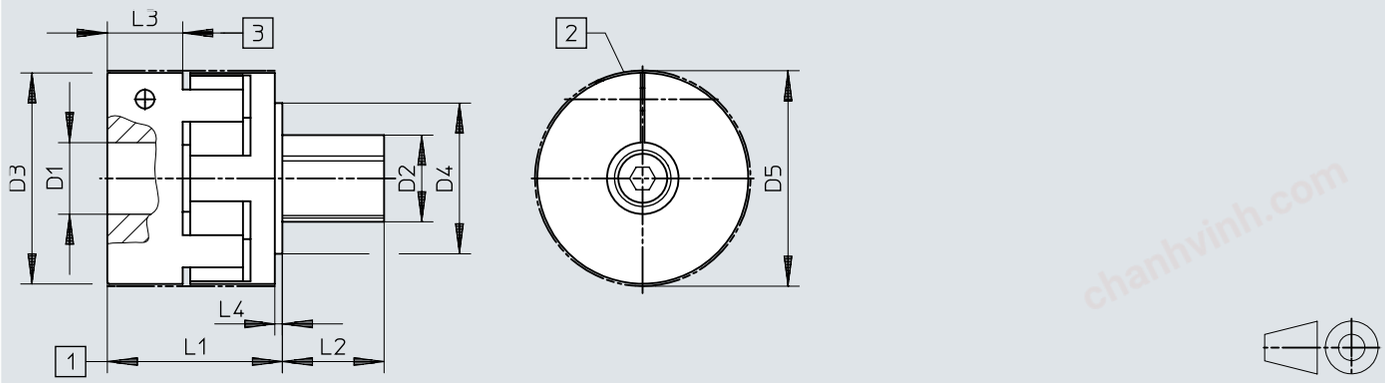


[1] Nominal length with axial offset compensation
[2] Min. installation Ø (interfering contour of the clamping screw)
[3] Insertion depth

| | D1<br>Ø<br>H7 | D2<br>Ø<br>H7 | D3<br>Ø | D4<br>Ø | D5<br>Ø | L1 | L2 | L3 | L4 |
|---|---|---|---|---|---|---|---|---|---|
| EAMD-21-15-11-8X10 | 11 | 8 | 21 | – | 21,5 | 15±1 | 10 | 6,5 | – |
| EAMD-21-15-12-8X10 | 12 | 8 | 21 | – | 21,5 | 15±1 | 10 | 6,5 | – |
| EAMD-25-22-6.35-10X12 | 6,35 | 10 | 25 | 22 | 25 | 22+1 | 12 | 8,1 | 1 |
| EAMD-25-22-8-10X12 | 8 | 10 | 25 | 22 | 25 | 22+1 | 12 | 8,1 | 1 |
| EAMD-25-22-9-10X12 | 9 | 10 | 25 | 22 | 25 | 22+1 | 12 | 8,1 | 1 |
| EAMD-25-22-10-10X12 | 10 | 10 | 25 | 22 | 25 | 22+1 | 12 | 8,1 | 1 |
| EAMD-25-22-11-10X12 | 11 | 10 | 25 | 22 | 25 | 22+1 | 12 | 8,1 | 1 |
| EAMD-25-22-12-10X12 | 12 | 10 | 25 | 22 | 25 | 22+1 | 12 | 8,1 | 1 |
| EAMD-28-22-14-10X12 | 14 | 10 | 28 | 22 | 28 | 22±1 | 12 | 8,1 | 1 |
| EAMD-30-22-16-10X12 | 16 | 10 | 30 | 22 | 30 | 22±1 | 12 | 8,1 | 1 |
| EAMD-32-32-9-16X20 | 9 | 16 | 32 | 25 | 32 | 32±1 | 20 | 10,3 | 1,5 |
| EAMD-32-32-10-16X20-U | 10 | 16 | 32 | 25 | 32 | 32±1 | 20 | 10,3 | 1,5 |
| EAMD-32-32-11-16X20 | 11 | 16 | 32 | 25 | 32 | 32±1 | 20 | 10,3 | 1,5 |
| EAMD-32-32-11-16X20-U | 11 | 16 | 32 | 25 | 32 | 32±1 | 20 | 10,3 | 1,5 |
| EAMD-32-32-12-16X20 | 12 | 16 | 32 | 25 | 32 | 32±1 | 20 | 10,3 | 1,5 |
| EAMD-32-32-14-16X20 | 14 | 16 | 32 | 25 | 32 | 32±1 | 20 | 10,3 | 1,5 |
| EAMD-32-32-14-16X20-U | 14 | 16 | 32 | 25 | 32 | 32±1 | 20 | 10,3 | 1,5 |
| EAMD-32-32-16-16X20 | 16 | 16 | 32 | 25 | 32 | 32±1 | 20 | 10,3 | 1,5 |
| EAMD-33-22-19-10X12 | 19 | 10 | 33 | 22 | 33 | 22±1 | 12 | 8,1 | 1 |
| EAMD-42-40-10-16X25 | 10 | 16 | 42 | 25 | 44,5 | 40±2 | 25 | 17 | 1,5 |
| EAMD-42-40-11-16X25 | 11 | 16 | 42 | 25 | 44,5 | 40±2 | 25 | 17 | 1,5 |
| EAMD-42-40-12-16X25 | 12 | 16 | 42 | 25 | 44,5 | 40±2 | 25 | 17 | 1,5 |
| EAMD-42-40-12-16X25-U | 12 | 16 | 42 | 25 | 44,5 | 40±2 | 25 | 17 | 1,5 |
| EAMD-42-40-14-16X25-U | 14 | 16 | 42 | 25 | 44,5 | 40±2 | 25 | 17 | 1,5 |
| EAMD-42-40-16-16X25 | 16 | 16 | 42 | 25 | 44,5 | 40±2 | 25 | 17 | 1,5 |
| EAMD-42-40-16-16x25-U | 16 | 16 | 42 | 25 | 44,5 | 40±2 | 25 | 17 | 1,5 |
| EAMD-42-40-18-16X25 | 18 | 16 | 42 | 25 | 44,5 | 40±2 | 25 | 17 | 1,5 |
| EAMD-42-40-19-16X25 | 19 | 16 | 42 | 25 | 44,5 | 40±2 | 25 | 17 | 1,5 |
| EAMD-42-40-19-16x25-U | 19 | 16 | 42 | 25 | 44,5 | 40±2 | 25 | 17 | 1,5 |
| EAMD-42-40-20-16X25 | 20 | 16 | 42 | 25 | 44,5 | 40±2 | 25 | 17 | 1,5 |
| EAMD-42-40-20-16X25-U | 20 | 16 | 42 | 25 | 44,5 | 40±2 | 25 | 17 | 1,5 |
| EAMD-42-40-22-16X25 | 22 | 16 | 42 | 25 | 44,5 | 40±2 | 25 | 17 | 1,5 |
| EAMD-42-48-16-16X25 | 16 | 16 | 42 | 25 | 44,5 | 48±2 | 25 | 25 | 1,5 |
| EAMD-42-48-19-16X25 | 19 | 16 | 42 | 25 | 44,5 | 48±2 | 25 | 25 | 1,5 |

# Dimensions

**Dimensions – Annular gear coupling with expanding mandrel EAMD-56 ... 67** Download CAD data www.festo.com

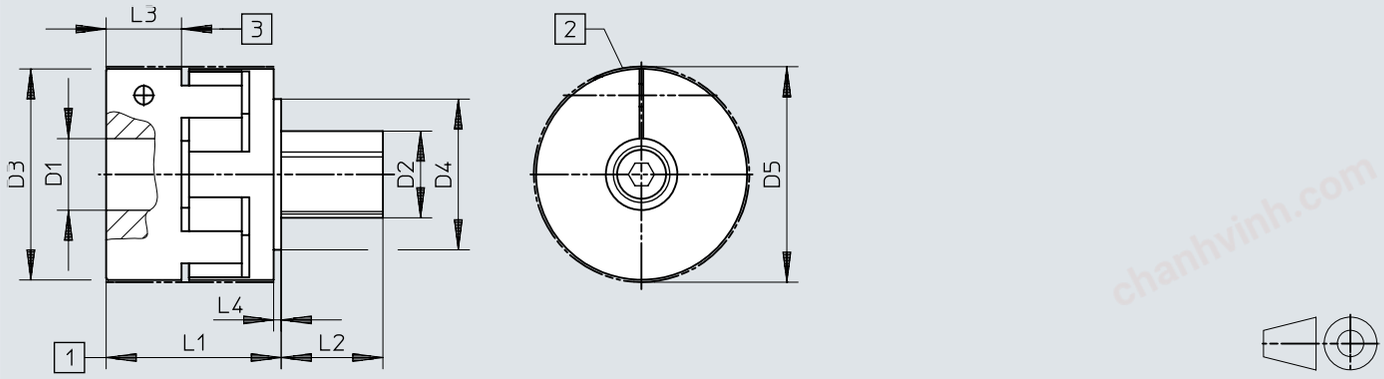


[1] Nominal length with axial offset compensation
[2] Min. installation Ø (interfering contour of the clamping screw)
[3] Insertion depth

| | D1 ø H7 | D2 ø H7 | D3 ø | D4 ø | D5 ø | L1 | L2 | L3 | L4 |
|---|---|---|---|---|---|---|---|---|---|
| EAMD-56-46-14-23X27 | 14 | 23 | 56 | 40 | 57 | 46,5±2 | 27 | 20 | 2 |
| EAMD-56-46-16-23X27 | 16 | 23 | 56 | 40 | 57 | 46,5±2 | 27 | 20 | 2 |
| EAMD-56-46-18-23X27 | 18 | 23 | 56 | 40 | 57 | 46,5±2 | 27 | 20 | 2 |
| EAMD-56-46-19-23X27 | 19 | 23 | 56 | 40 | 57 | 46,5±2 | 27 | 20 | 2 |
| EAMD-56-46-19-23X27-U | 19 | 23 | 56 | 40 | 57 | 46,5±2 | 27 | 20 | 2 |
| EAMD-56-46-20-23X27 | 20 | 23 | 56 | 40 | 57 | 46,5±2 | 27 | 20 | 2 |
| EAMD-56-46-20-23X27-U | 20 | 23 | 56 | 40 | 57 | 46,5±2 | 27 | 20 | 2 |
| EAMD-56-46-22-23X27 | 22 | 23 | 56 | 40 | 57 | 46,5±2 | 27 | 20 | 2 |
| EAMD-56-46-22-23X27-U | 22 | 23 | 56 | 40 | 57 | 46,5±2 | 27 | 20 | 2 |
| EAMD-56-46-24-23X27 | 24 | 23 | 56 | 40 | 57 | 46,5±2 | 27 | 20 | 2 |
| EAMD-56-46-24-23X27-U | 24 | 23 | 56 | 40 | 57 | 46,5±2 | 27 | 20 | 2 |
| EAMD-56-46-25-23X27 | 25 | 23 | 56 | 40 | 57 | 46,5±2 | 27 | 20 | 2 |
| EAMD-56-46-25-23X27-U | 25 | 23 | 56 | 40 | 57 | 46,5±2 | 27 | 20 | 2 |
| EAMD-56-46-32-23X27 | 32 | 23 | 56 | 40 | 57 | 46,5±2 | 27 | 20 | 2 |
| EAMD-56-54-18-23X27 | 18 | 23 | 56 | 40 | 57 | 54,5±2 | 27 | 20 | 2 |
| EAMD-56-54-19-23X27 | 19 | 23 | 56 | 40 | 57 | 54,5±2 | 27 | 20 | 2 |
| EAMD-56-54-22-23X27 | 22 | 23 | 56 | 40 | 57 | 54,5±2 | 27 | 20 | 2 |
| EAMD-56-56-25-23X27-U | 25 | 23 | 56 | 40 | 57 | 56,5±2 | 27 | 20 | 2 |
| EAMD-56-56-32-23X27-U | 32 | 23 | 56 | 40 | 57 | 56,5±2 | 27 | 20 | 2 |
| EAMD-56-62-20-23X27 | 20 | 23 | 56 | 40 | 57 | 62,5±2 | 27 | 20 | 2 |
| EAMD-67-51-16-32x32-U | 16 | 32 | 66,5 | – | 68 | 51±2 | 32 | 21,25 | – |
| EAMD-67-51-19-32X32-U | 19 | 32 | 66,5 | – | 68 | 51±2 | 32 | 21,25 | – |
| EAMD-67-51-20-32X32-U | 20 | 32 | 66,5 | – | 68 | 51±2 | 32 | 21,25 | – |
| EAMD-67-51-22-32X32-U | 22 | 32 | 66,5 | – | 68 | 51±2 | 32 | 21,25 | – |
| EAMD-67-51-24-32X32-U | 24 | 32 | 66,5 | – | 68 | 51±2 | 32 | 21,25 | – |
| EAMD-67-51-25-32X32-U | 25 | 32 | 66,5 | – | 68 | 51±2 | 32 | 21,25 | – |
| EAMD-67-51-32-32X32-U | 32 | 32 | 66,5 | – | 68 | 51±2 | 32 | 21,25 | – |
| EAMD-67-65-32-32X32-U | 32 | 32 | 66,5 | – | 68 | 65±2 | 32 | 21,25 | – |
| EAMD-67-65-40-32X32-U | 32 | 32 | 66,5 | – | 68 | 65±2 | 32 | 21,25 | – |
| EAMD-67-82-24-32X32-U | 24 | 32 | 66,5 | – | 68 | 82±2 | 32 | 21,25 | – |
| EAMD-67-82-25-32X32-U | 25 | 32 | 66,5 | – | 68 | 82±2 | 32 | 21,25 | – |
| EAMD-67-82-32-32X32-U | 32 | 32 | 66,5 | – | 68 | 82±2 | 32 | 21,25 | – |
| EAMD-67-96-32-32x32-U | 32 | 32 | 66,5 | – | 68 | 96±2 | 32 | 21,25 | – |

chanhvinh.com



## Ordering data

**Annular gear coupling with expanding mandrel EAMD**

| | Size | Nominal length | Inside diameter 1 | Part no. | Type |
|---|---|---|---|---|---|
|  | 16 | 15 mm | 5 mm | 4819892 | EAMD-16-15-5-8X10 |
| | | | 6 mm | 4819883 | EAMD-16-15-6-8X10 |
| | | | 6.35 mm | 561292 | EAMD-16-15-6.35-8X10 |
| | | | 8 mm | 1184697 | EAMD-16-15-8-8X10 |
| | 19 | | 9 mm | 557999 | EAMD-19-15-9-8X10 |
| | | | 10 mm | 557998 | EAMD-19-15-10-8X10 |
| | 21 | | 11 mm | 4820350 | EAMD-21-15-11-8X10 |
| | | | 12 mm | 4820335 | EAMD-21-15-12-8X10 |
| | 25 | 22 mm | 6.35 mm | 561293 | EAMD-25-22-6.35-10X12 |
| | | | 8 mm | 5010861 | EAMD-25-22-8-10X12 |
| | | | 9 mm | 3717923 | EAMD-25-22-9-10X12 |
| | | | 10 mm | 1453860 | EAMD-25-22-10-10X12 |
| | | | 11 mm | 558000 | EAMD-25-22-11-10X12 |
| | | | 12 mm | 5029897 | EAMD-25-22-12-10X12 |
| | 28 | | 14 mm | 1453861 | EAMD-28-22-14-10X12 |
| | 30 | | 16 mm | 5030235 | EAMD-30-22-16-10X12 |
| | 32 | 32 mm | 9 mm | 5038002 | EAMD-32-32-9-16X20 |
| | | | 10 mm | 5273329 | EAMD-32-32-10-16X20-U |
| | | | 11 mm | 558001 | EAMD-32-32-11-16X20 |
| | | | | 8086050 | EAMD-32-32-11-16X20-U |
| | | | 12 mm | 8070762 | EAMD-32-32-12-16X20 |
| | | | 14 mm | 8086051 | EAMD-32-32-14-16X20-U |
| | | | | 1377840 | EAMD-32-32-14-16X20 |
| | | | 16 mm | 1184858 | EAMD-32-32-16-16X20 |
| | 33 | 22 mm | 19 mm | 5030024 | EAMD-33-22-19-10X12 |
| | 42 | 40 mm | 10 mm | 5200227 | EAMD-42-40-10-16X25 |
| | | | 11 mm | 8203729 | EAMD-42-40-11-16X25-U |
| | | | | 5200234 | EAMD-42-40-11-16X25 |
| | | | 12 mm | 8203728 | EAMD-42-40-12-16X25-U |
| | | | | 5200241 | EAMD-42-40-12-16X25 |
| | | | 14 mm | 3420022 | EAMD-42-40-14-16X25-U |
| | | | 16 mm | 5153079 | EAMD-42-40-16-16X25 |
| | | | | 8203726 | EAMD-42-40-16-16X25-U |
| | | | 18 mm | 5056644 | EAMD-42-40-18-16X25 |
| | | | 19 mm | 558002 | EAMD-42-40-19-16X25 |
| | | | | 8203727 | EAMD-42-40-19-16X25-U |
| | | | 20 mm | 1188350 | EAMD-42-40-20-16X25 |
| | | | | 1781043 | EAMD-42-40-20-16X25-U |
| | | | 22 mm | 5046328 | EAMD-42-40-22-16X25 |
| | | 48 mm | 16 mm | 8121126 | EAMD-42-48-16-16X25 |
| | | | 19 mm | 8121127 | EAMD-42-48-19-16X25 |
| | 56 | 46 mm | 16 mm | 8166642 | EAMD-56-46-16-23X27 |
| | | | 19 mm | 8164975 | EAMD-56-46-19-23X27-U |
| | | | 20 mm | 8165049 | EAMD-56-46-20-23X27-U |
| | | | 22 mm | 8164974 | EAMD-56-46-22-23X27-U |
| | | | 24 mm | 8134726 | EAMD-56-46-24-23X27-U |
| | | 46.5 mm | 14 mm | 5062229 | EAMD-56-46-14-23X27 |
| | | | 18 mm | 5063729 | EAMD-56-46-18-23X27 |
| | | | 19 mm | 558003 | EAMD-56-46-19-23X27 |
| | | | 20 mm | 558004 | EAMD-56-46-20-23X27 |
| | | | 24 mm | 558005 | EAMD-56-46-24-23X27 |
| | | | 25 mm | 1781045 | EAMD-56-46-25-23X27-U |
| | | | | 1188801 | EAMD-56-46-25-23X27 |
| | | | 32 mm | 5063745 | EAMD-56-46-32-23X27 |
| | | 54.5 mm | 18 mm | 5225774 | EAMD-56-54-18-23X27 |
| | | | 19 mm | 5215476 | EAMD-56-54-19-23X27 |

chanhvinh.com



## Ordering data

**Annular gear coupling with expanding mandrel EAMD**

| | Size | Nominal length | Inside diameter 1 | Part no. | Type |
|---|---|---|---|---|---|
|  | 56 | 54.5 mm | 22 mm | **5226828** | **EAMD-56-54-22-23X27** |
| | | 56 mm | 25 mm | **8196717** | **EAMD-56-56-25-23X27-U** |
| | | | 32 mm | **8196718** | **EAMD-56-56-32-23X27-U** |
| | | 62.5 mm | 20 mm | **5228153** | **EAMD-56-62-20-23X27** |
| | 67 | 51 mm | 16 mm | **5071095** | **EAMD-67-51-16-32X32-U** |
| | | | 19 mm | **3398671** | **EAMD-67-51-19-32X32-U** |
| | | | 20 mm | **3717812** | **EAMD-67-51-20-32X32-U** |
| | | | 22 mm | **5070937** | **EAMD-67-51-22-32X32-U** |
| | | | 24 mm | **558008** | **EAMD-67-51-24-32X32-U** |
| | | | 25 mm | **558006** | **EAMD-67-51-25-32X32-U** |
| | | | 32 mm | **1379269** | **EAMD-67-51-32-32X32-U** |
| | | 65 mm | 25 mm | **8196715** | **EAMD-67-65-25-32X32-U** |
| | | | 32 mm | **8196716** | **EAMD-67-65-32-32X32-U** |
| | | | 40 mm | **8196714** | **EAMD-67-65-40-32X32-U** |
| | | 82 mm | 24 mm | **558009** | **EAMD-67-82-24-32X32-U** |
| | | | 25 mm | **558007** | **EAMD-67-82-25-32X32-U** |
| | | 96 mm | 32 mm | **8197587** | **EAMD-67-96-32-32X32-U** |