chanhvinh.com

Bellows gripper DHEB



chanhvinh.com

Characteristics

At a glance Link dheb

An internal piston moves when the compressed air connection is pressurised. A mechanism transfers the movement of the piston to the bellows. This causes the bellows to deform outwards. The increase in the bellows diameter enables it to grasp payloads using their inner contour. When the gripper is exhausted, the return force of the bellows pushes the piston back to its initial position.

General information:
- Single-acting internal gripper
- Optionally with internal through-hole
- Max. payload: 5.1 kg
- Working range: diameter 8 ... 85 mm

There is a choice of two actuating directions for the bellows:
- Downwards
- Upwards

Choice of two bellows materials:
- Ethylene propylene rubber (EPDM)
- Silicone

Two compressed air connection positions can be selected:
- In direction of travel (overhead)
- Perpendicular to the direction of movement (lateral)

These grippers are not designed for the following or similar application examples:
- Machining
- Aggressive media
- Grinding dust
- Welding spatter

Engineering tools Link engineering tools

Save time with engineering tools: Smart engineering for the optimal solution. Our goal is to increase your productivity. Our engineering tools play an integral part in achieving this goal. They help you size your system correctly, tap into unimagined productivity reserves and generate additional productivity along the entire value chain. In every phase of your project, from the initial contact to the modernisation of your machine, you will come across a number of different tools that will be of use to you.

Gripper selection:
- This tool helps you to select the right grippers by simply entering the exact parameters for your application

Actuation direction

[D] Downwards

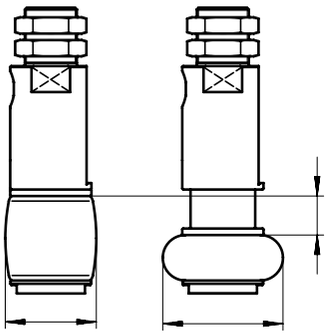

Bellows exhausted/pressurised

[U] Upwards

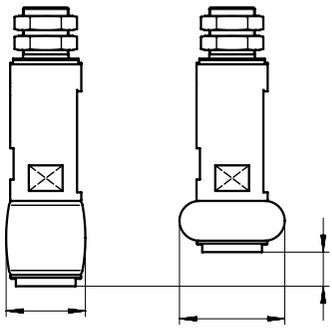

Bellows exhausted/pressurised

chanhvinh.com

Characteristics

Bellows material

[E]	EPDM

- Higher friction coefficient than silicone material
- Minimal marking on high-gloss parts

[S]	Silicone

- Very good temperature resistance (wider range)
- Food-safe
- Longer service life than EPDM material

Connection position

[L]	In the direction of motion

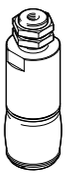

[P]	Perpendicular to direction of movement

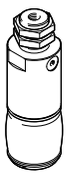

Application example

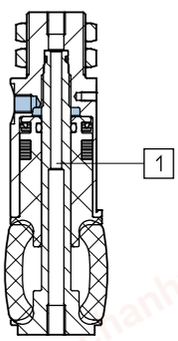

- Gentle internal gripping of fragile workpieces (e.g. glass or ceramics)
- Transporting and packaging of glasses, cups and bottles, for example
- The internal through-hole [1] (optional) enables the workpiece to be cooled, cleaned, checked for leaks or disinfected during the handling process

Only use the gripper for cylindrically shaped workpieces.

chanhvinh.com

Type code

001	Series	
DHEB	Bellows grippers	

002	Size [mm]	
8	8	
10	10	
12	12	
14	14	
18	18	
22	22	
27	27	
33	33	
41	41	
51	51	
63	63	

003	Gripper function	
E	Single-acting	

004	Actuation direction	
D	Downwards	
U	Upwards	

005	Bellows material	
E	EPDM	
S	Silicone	

006	Connection position	
L	In the direction of motion	
P	Perpendicular to direction of movement	

chanhvinh.com

Datasheet

Pneumatic connection – DHEB-8 ... 22

Size	8		10		12		14		18		22	
Connection position	In the direction of motion	Perpendicular to direction of movement	In the direction of motion	Perpendicular to direction of movement	In the direction of motion	Perpendicular to direction of movement	In the direction of motion	Perpendicular to direction of movement	In the direction of motion	Perpendicular to direction of movement	In the direction of motion	Perpendicular to direction of movement
Pneumatic connection	M5	M3	M5	M3	M5	M3	M5	M3	M5			

Pneumatic connection – DHEB-27 ... 63

Size	27		33		41		51		63	
Connection position	In the direction of motion	Perpendicular to direction of movement	In the direction of motion	Perpendicular to direction of movement	In the direction of motion	Perpendicular to direction of movement	In the direction of motion	Perpendicular to direction of movement	In the direction of motion	Perpendicular to direction of movement
Pneumatic connection	M5		G1/8	M5	G1/8	M5	G1/8			

Replacement interval for the bellows – DHEB-8 ... 22

Size	8		10		12		14		18		22	
Bellows material	EPDM	Silicone	EPDM	Silicone	EPDM	Silicone	EPDM	Silicone	EPDM	Silicone	EPDM	Silicone
Average replacement interval for the bellows	0.5 MioCyc	1 MioCyc	0.5 MioCyc	1 MioCyc	0.5 MioCyc	1 MioCyc	0.5 MioCyc	1 MioCyc	0.5 MioCyc	1 MioCyc	0.5 MioCyc	1 MioCyc

Replacement interval for the bellows – DHEB-27 ... 63

Size	27		33		41		51		63	
Bellows material	EPDM	Silicone	EPDM	Silicone	EPDM	Silicone	EPDM	Silicone	EPDM	Silicone
Average replacement interval for the bellows	0.5 MioCyc	1 MioCyc	0.5 MioCyc	1 MioCyc	0.5 MioCyc	1 MioCyc	0.5 MioCyc	1 MioCyc	0.5 MioCyc	1 MioCyc

Diameter to be gripped

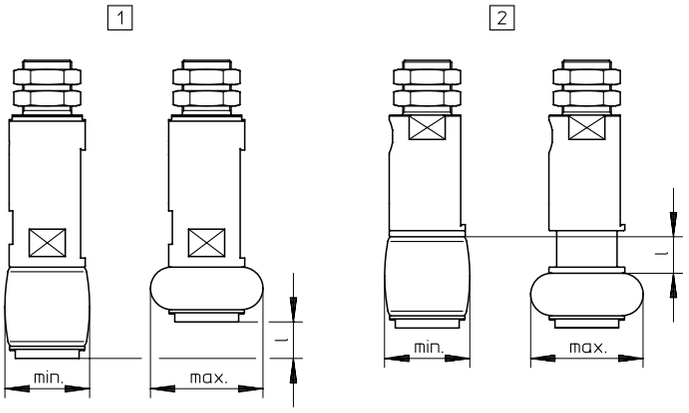

[1] DHEB-...-U – actuation direction upwards
[2] DHEB-...-D – actuation direction downwards

l = Bellows stroke

Size	8	10	12	14	18	22	27	33	41	51	63
Stroke of bellows [1]	3.5	4	5.5	7	7.5	12		14.5	15.5	18	25
Min. ø to be gripped [2]	8 mm	10.5 mm	13 mm	15 mm	19.5 mm	24 mm	28 mm	34 mm	42 mm	54 mm	66 mm
Max. ø to be gripped [3]	11 mm	14 mm	17 mm	19.5 mm	25 mm	31.5 mm	37 mm	45 mm	54 mm	68 mm	85 mm

1) Tolerance ±0.5 mm
2) Tolerance ±1 mm
3) Tolerance ±1 mm

chanhvinh.com

Datasheet

Operating and environmental conditions

Size	8	10	12	14	18	22	27	33	41	51	63
Operating pressure	5 ... 8 bar						4 ... 8 bar				
Reset pressure	<1 bar										
Operating medium	Compressed air to ISO 8573-1:2010 [7:4:4]										
Note on operating and pilot medium [1]	Lubricated operation possible (in which case lubricated operation will always be required)										
Ambient temperature	5 ... 60°C										
Suitable for use with food [2]	See supplementary material information										
Corrosion resistance class CRC [3]	2 - Moderate corrosion stress										

1) Note the operating range of the proximity switches
2) Only with silicone bellows material
3) More information: www.festo.com/x/topic/crc

Weight – DHEB-8 ... 22

Size	8		10		12		14		18		22	
Actuation direction	Down-wards	Upwards	Down-wards	Upwards	Down-wards	Upwards	Down-wards	Upwards	Down-wards	Upwards	Down-wards	Upwards
Product weight	15 g	16 g		17 g		18 g	17 g	20 g	28 g	35 g	43 g	50 g

Weight – DHEB-27 ... 63

Size	27		33		41		51		63	
Actuation direction	Downwards	Upwards	Downwards	Upwards	Downwards	Upwards	Downwards	Upwards	Downwards	Upwards
Product weight	79 g	100 g	118 g	130 g	280 g	300 g	490 g	500 g	800 g	785 g

Materials

Size	8	10	12	14	18	22	27	33	41	51	63
Material housing	Aluminium, Anodised										
Material bellows	EPDM VMQ (silicone)										
Note on materials	RoHS-compliant										
LABS (PWIS) conformity	VDMA24364 zone III										

chanhvinh.com

Datasheet

Holding force/slip force F at 0.6 MPa (6 bar, 87 psi) as a function of diameter d and actuating direction of the gripper

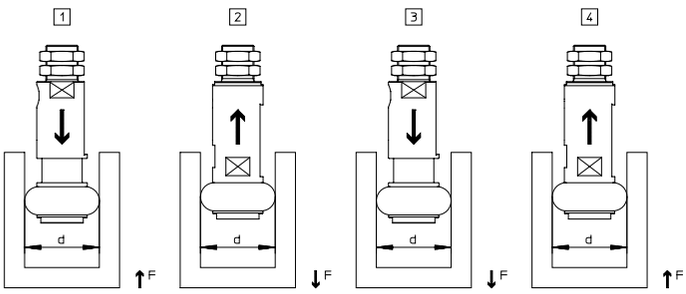

The forces depend on the following factors:

- Diameter of the workpiece to be held
- Actuating direction of the gripper
- Surface structure
- Friction coefficients
- Operating pressure

[1] Use case 1:

- DHEB-...-D – Actuation direction downwards
- Workpiece pushing

[2] Use case 1:

- DHEB-...-U – Actuation direction: upwards
- Workpiece pulling

[3] Use case 2:

- DHEB-...-D – Actuation direction downwards
- Workpiece pulling

[4] Use case 2:

- DHEB-...-U – Actuation direction upwards
- Workpiece pushing

Use case 1 – DHEB-8 ... 18

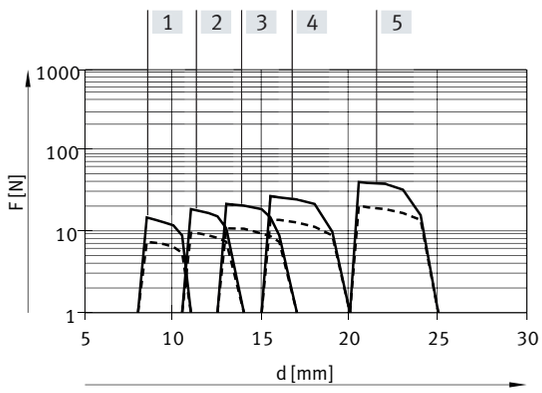

1) ————
2) - - - - - -

[1] DHEB-8
[2] DHEB-10
[3] DHEB-12
[4] DHEB-14
[5] DHEB-18

1) Material: EPDM
2) Material: Silicone

A tolerance of ±1 mm must be observed with diameter d.

chanhvinh.com

Datasheet

Use case 1 – DHEB-22 ... 63

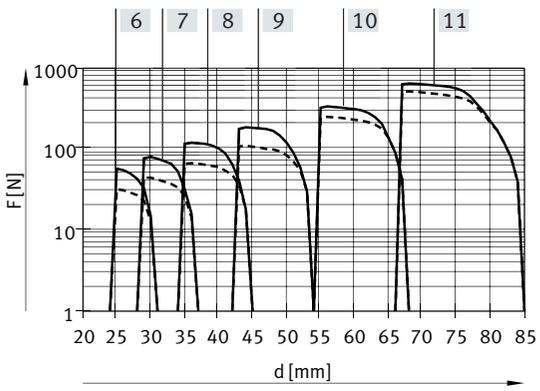

1) ————
2) - - - - - -

[6] DHEB-22
[7] DHEB-27
[8] DHEB-33
[9] DHEB-41
[10] DHEB-51
[11] DHEB-63

1) Material: EPDM
2) Material: Silicone

A tolerance of ±1 mm must be observed with diameter d.

Use case 2 – DHEB-8 ... 18

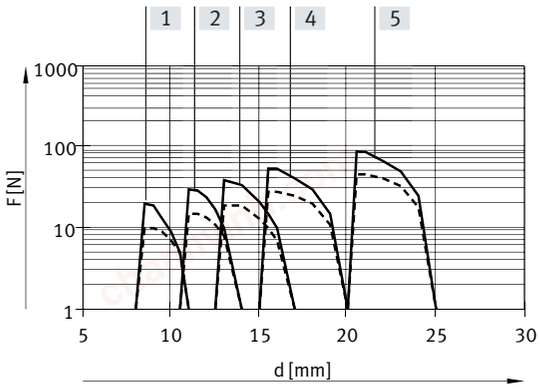

1) ————
2) - - - - - -

[1] DHEB-8
[2] DHEB-10
[3] DHEB-12
[4] DHEB-14
[5] DHEB-18

1) Material: EPDM
2) Material: Silicone

A tolerance of ±1 mm must be observed with diameter d.

Use case 2 – DHEB-22 ... 63

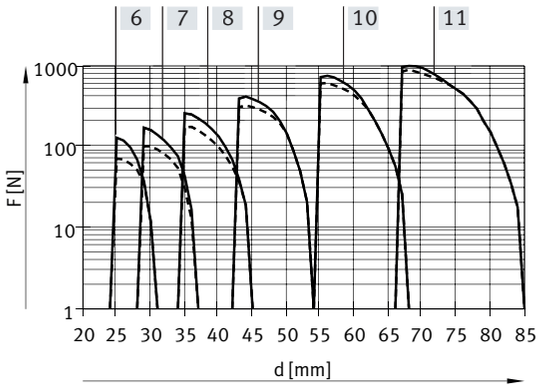

1) ————
2) - - - - - -

[6] DHEB-22
[7] DHEB-27
[8] DHEB-33
[9] DHEB-41
[10] DHEB-51
[11] DHEB-63

1) Material: EPDM
2) Material: Silicone

A tolerance of ±1 mm must be observed with diameter d.

chanhvinh.com

Datasheet

Opening and closing times

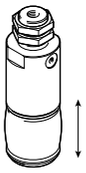

The indicated opening and closing times [ms] were measured at room temperature, an operating pressure of 0.6 MPa (6 bar, 87 psi) and with the gripper installed vertically. The times refer to the unloaded gripper. Depending on the design variant, the expansion of the bellows is declared as the opening time and the reset as the closing time.

Size	8	10	12	14	18	22	27	33	41	51	63
Min. closing time at 0.6 MPa (6 bar, 87 psi)	30 ms	40 ms			50 ms	60 ms			70 ms		100 ms
Min. opening time at 0.6 MPa (6 bar, 87 psi)	10 ms	20 ms				30 ms					40 ms

chanhvinh.com

Dimensions

Dimensions – DHEB-...-D – Actuation direction downwards

Download CAD data www.festo.com

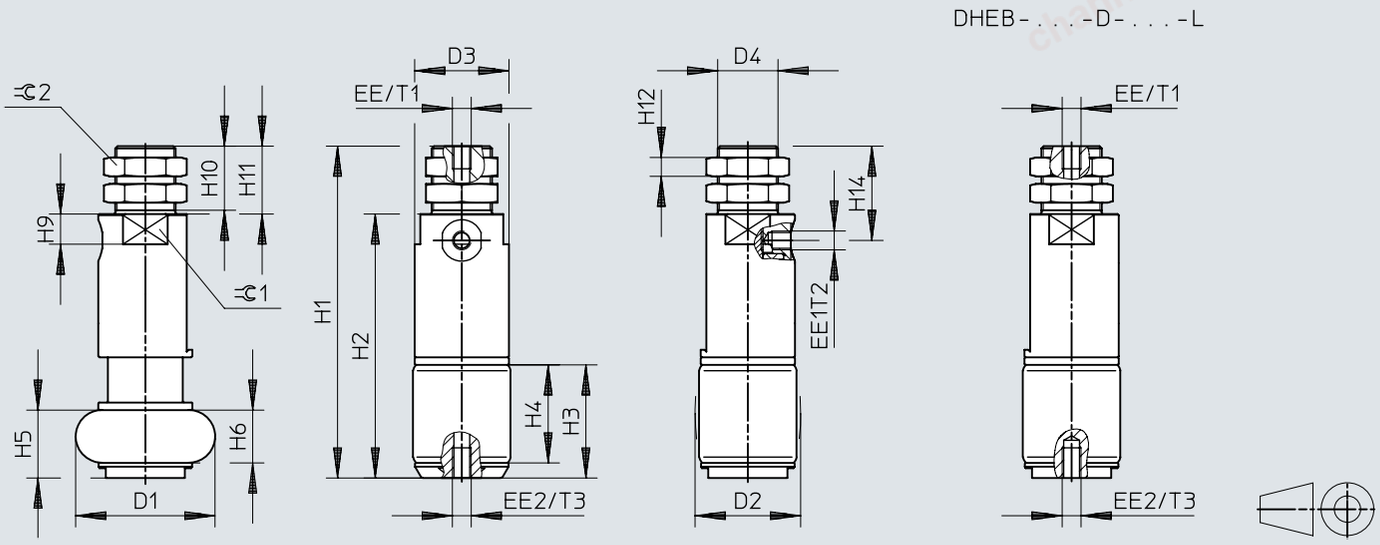

Dimensions

	D1 Ø ±1	D2 Ø ±1	D3 Ø	D4	EE	EE1	EE2	H1 ±1	H2 ±1
DHEB-8	11	8	14	M10x1	M5	M3	M2	52,7	39,7
DHEB-10	14	10,5	14	M10x1	M5	M3	M2	54,2	41,2
DHEB-12	17	13	14	M12x1	M5	M3	M3	55,5	42,5
DHEB-14	19,5	15	14	M12x1	M5	M3	M3	55,8	42,8
DHEB-18	25	19,5	18	M12x1	M5	M5	M3	65	51
DHEB-22	31,5	24	21,5	M14x1	M5	M5	M3	75,5	60,5
DHEB-27	37	28	25	M16x1	M5	M5	M5	88	70
DHEB-33	45	34	30	M22x1,5	G1/8	M5	G1/8	109	84
DHEB-41	54	42	40	M22x1,5	G1/8	M5	G1/8	126,5	101,5
DHEB-51	68	54	50	M26x1,5	G1/8	G1/8	G1/8	159	127
DHEB-63	85	66	60	M26x1,5	G1/8	G1/8	G1/8	189	157

	H3 ±0,5	H4 ±0,5	H5 ±0,5	H6 ±0,5	H7 ±1	H8 ±1	H9	H10 ±1
DHEB-8	9,2	7	5,2	3	53,5	40,5	6	12
DHEB-10	10,7	8,5	6,2	4	54	41	6	12
DHEB-12	13	10,5	7,5	5	55	42	6	12
DHEB-14	15,8	13	8,8	6	57	44	6	12
DHEB-18	19,5	16,5	12	9	65	51	6	13
DHEB-22	24,2	21	14,2	11	72	57	7	14
DHEB-27	30,5	26,5	18	14	86	68	8	17
DHEB-33	37	32,5	22,5	18	101,5	76,5	8	24
DHEB-41	45	39,5	29,5	24	115,5	90,5	11	23,5
DHEB-51	55	48	37	30	142	110	13	30
DHEB-63	70	61	45	36	160	128	16	30

	H11	H12	H13 ±0,5	H14 ±0,5	T1 ±2	T2 min.	T3 min.	⌀G1	⌀G2
DHEB-8	13	3,5	21	17,5	5	–	3,5	13	13
DHEB-10	13	3,5	21,55	17,5	5	–	3,5	13	13
DHEB-12	13	4	22,4	17,5	5	–	4	13	15
DHEB-14	13	4	26,2	17,5	5	–	4	13	15
DHEB-18	14	4	29	19,3	5	–	4	16	15
DHEB-22	15	5	31,8	21	5	–	5	19	17
DHEB-27	18	5	37,5	25	5	5	8	22	19
DHEB-33	25	6	40,5	31,5	8	5	8	28	27
DHEB-41	25	6	45	32,5	8	6	7	36	27
DHEB-51	32	8	54	42,5	8	8	–	45	32
DHEB-63	32	8	62	46	10	8	–	54	32

chanhvinh.com

Dimensions

Dimensions – DHEB-...-U – Actuation direction upwards Download CAD data www.festo.com

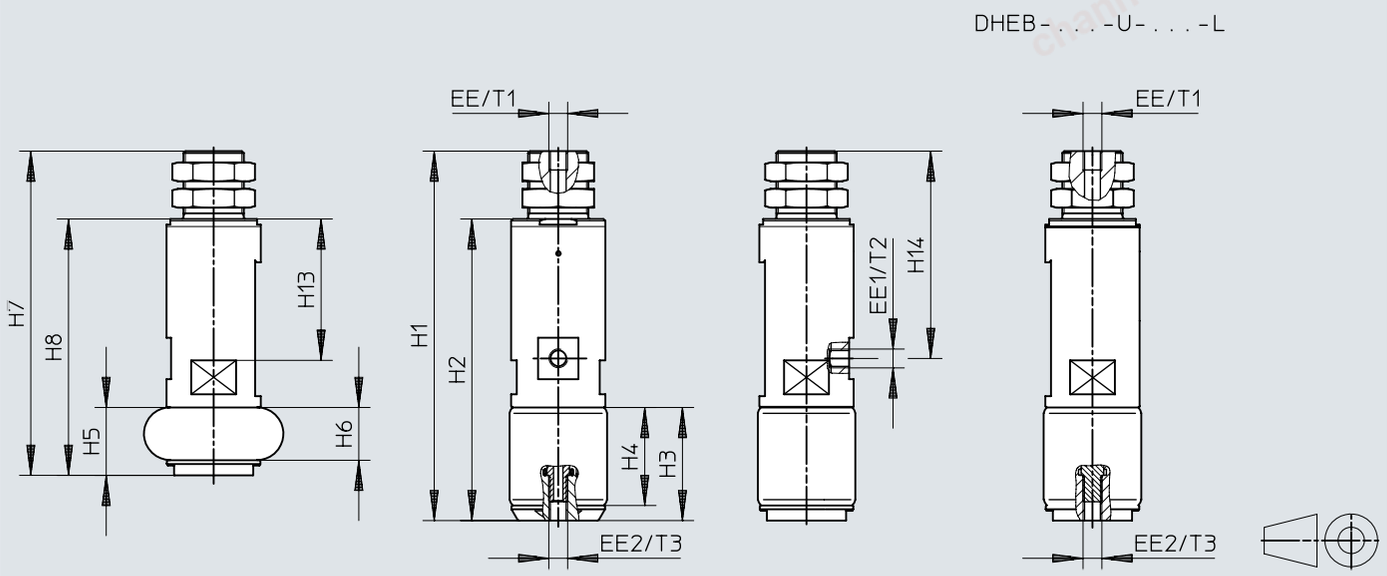

chanhvinh.com

Dimensions

	D1 Ø ±1	D2 Ø ±1	D3 Ø	D4	EE	EE1	EE2	H1 ±1	H2 ±1
DHEB-8	11	8	14	M10x1	M5	M3	M2	57,5	44,5
DHEB-10	14	10,5	14	M10x1	M5	M3	M2	58,8	45,5
DHEB-12	17	13	14	M10x1	M5	M3	M3	60,5	47,5
DHEB-14	19,5	15	14	M10x1	M5	M3	M3	64	51
DHEB-18	25	19,5	18	M12x1	M5	M5	M3	72,5	58,5
DHEB-22	31,5	24	21,5	M14x1	M5	M5	M3	82	67
DHEB-27	37	28	25	M16x1	M5	M5	M5	98	80
DHEB-33	45	34	30	M22x1,5	G1/8	M5	G1/8	116	91
DHEB-41	54	42	40	M22x1,5	G1/8	M5	G1/8	131	106
DHEB-51	68	54	50	M26x1,5	G1/8	G1/8	G1/8	160	128
DHEB-63	85	66	60	M26x1,5	G1/8	G1/8	G1/8	185	153

	H3 ±0,5	H4 ±0,5	H5 ±0,5	H6 ±0,5	H7 ±1	H8 ±1	H9	H10 ±1
DHEB-8	9,2	7	5,2	3	53,5	40,5	–	12
DHEB-10	10,7	8,5	6,2	4	54	41	–	12
DHEB-12	13	10,5	7,5	5	55	42	–	12
DHEB-14	15,8	13	8,8	6	57	44	6	12
DHEB-18	19,5	16,5	12	9	65	51	7	13
DHEB-22	24,2	21	14,2	11	72	57	8	14
DHEB-27	30,5	26,5	18	14	86	68	9	16,5
DHEB-33	37	32,5	22,5	18	101,5	76,5	10	23,5
DHEB-41	45	39,5	29,5	24	115,5	90,5	12	23,5
DHEB-51	55	48	37	30	142	110	14	30
DHEB-63	70	61	45	36	160	128	16	30

	H11	H12	H13 ±0,5	H14 ±0,5	T1 ±2	T2 min.	T3 min.	⌀G1	⌀G2
DHEB-8	13	3,5	21	35,5	5	–	3,5	13	13
DHEB-10	13	3,5	21,55	36	5	–	3,5	13	13
DHEB-12	13	3,5	22,4	36,5	5	–	4	13	13
DHEB-14	13	3,5	26,2	38,2	5	–	4	13	13
DHEB-18	14	4	29	42	5	–	4	16	15
DHEB-22	15	5	31,8	46,5	5	–	5	20	17
DHEB-27	18	5	37,5	55	5	5	–	22	19
DHEB-33	25	6	40,5	65	8	5	7	27	27
DHEB-41	25	6	45	70	8	6	–	36	27
DHEB-51	32	8	54	88,5	9	8	–	45	32
DHEB-63	32	8	62	96,5	10	8	–	54	32

chanhvinh.com

Dimensions

Dimensions – Sensor rail DASP-...-D Download CAD data www.festo.com

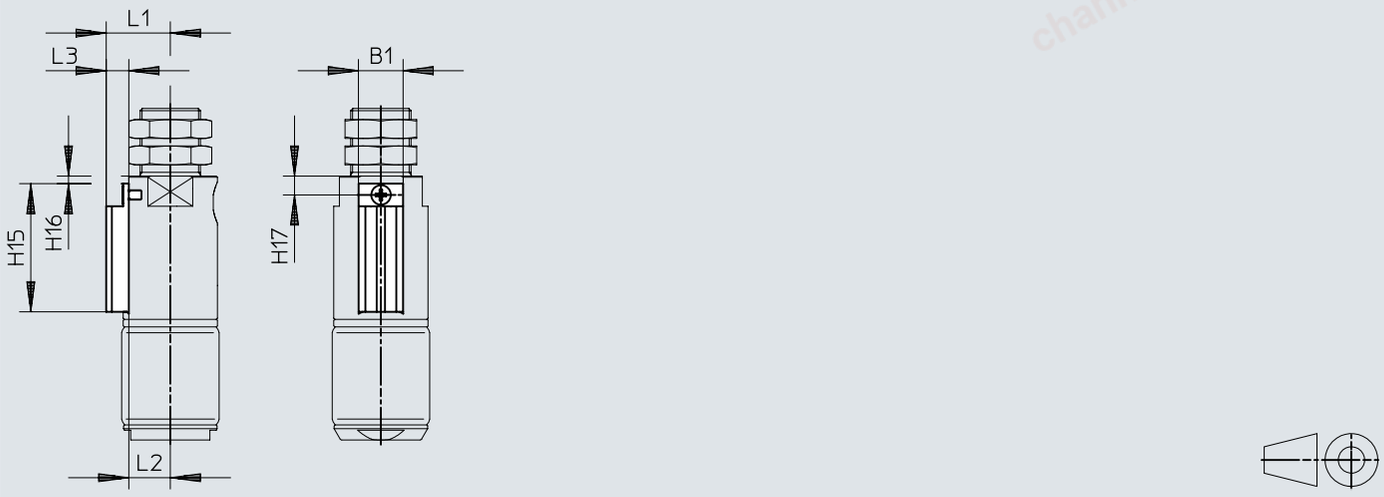

		B1	H15	H16	H17	L1	L2	L3
DASP-G3-27	DHEB-...-D	11,8	34,5	2	5	17	11	6
DASP-G3-33		11,8	41	2	5	19,7	13,7	6
DASP-G3-41		11,8	47	3	6	23,8	17,8	6
DASP-G3-51		11,8	55,5	7	10	28,5	22,5	6
DASP-G3-63		11,8	61	11	14	33,5	27,5	6

chanhvinh.com

Dimensions

Dimensions – Sensor rail DASP-...-U Download CAD data www.festo.com

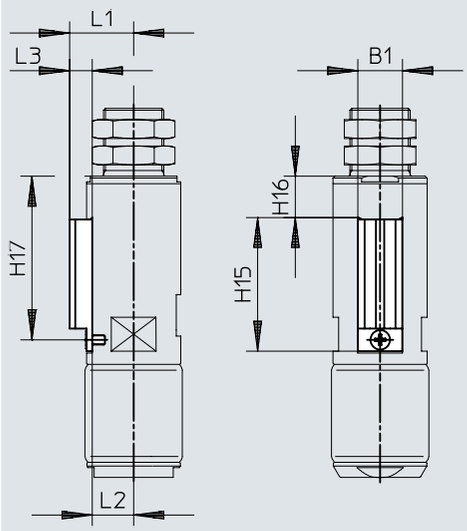

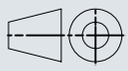

		B1	H15	H16	H17	L1	L2	L3
DASP-G3-27	DHEB-...-U	11,8	34,5	12	43,5	17	11	6
DASP-G3-33		11,8	39,5	11	47,5	19,8	13,8	6
DASP-G3-41		11,8	43	13,5	53,5	23,8	17,8	6
DASP-G3-51		11,8	45,5	17	59,5	28,5	22,5	6
DASP-G3-63		11,8	51,5	20	68,5	33,5	27,5	6

Ordering data

DHEB-...-D-...-L – Actuating direction downwards; connection position in direction of movement

	Size	Stroke of bellows	Bellows material	Product weight	Part no.	Type
	8	3.5 mm	Silicone	15 g	1320754	DHEB-8-E-D-S-L
			EPDM		1320765	DHEB-8-E-D-E-L
	10	4 mm		16 g	1320766	DHEB-10-E-D-E-L
			Silicone		1320755	DHEB-10-E-D-S-L
	12	5.5 mm	EPDM	17 g	1320767	DHEB-12-E-D-E-L
			Silicone		1320756	DHEB-12-E-D-S-L
	14	7 mm	EPDM		1320768	DHEB-14-E-D-E-L
			Silicone		1320757	DHEB-14-E-D-S-L
	18	7.5 mm	EPDM	28 g	1320769	DHEB-18-E-D-E-L
			Silicone		1320758	DHEB-18-E-D-S-L
	22	12 mm	EPDM	43 g	1320770	DHEB-22-E-D-E-L
			Silicone		1320759	DHEB-22-E-D-S-L
	27		EPDM	79 g	1320771	DHEB-27-E-D-E-L
			Silicone		1320760	DHEB-27-E-D-S-L
	33	14.5 mm	EPDM	118 g	1320772	DHEB-33-E-D-E-L
			Silicone		1320761	DHEB-33-E-D-S-L
	41	15.5 mm	EPDM	280 g	1320773	DHEB-41-E-D-E-L
			Silicone		1320762	DHEB-41-E-D-S-L
	51	18 mm		490 g	1320763	DHEB-51-E-D-S-L
			EPDM		1320774	DHEB-51-E-D-E-L
	63	25 mm		800 g	1320775	DHEB-63-E-D-E-L
			Silicone		1320764	DHEB-63-E-D-S-L

DHEB-...-D-...-P – Actuating direction downwards; connection position perpendicular to the direction of movement

	Size	Stroke of bellows	Bellows material	Product weight	Part no.	Type
	8	3.5 mm	EPDM	15 g	1320787	DHEB-8-E-D-E-P
			Silicone		1320776	DHEB-8-E-D-S-P
	10	4 mm		16 g	1320777	DHEB-10-E-D-S-P
			EPDM		1320788	DHEB-10-E-D-E-P
	12	5.5 mm	Silicone	17 g	1320778	DHEB-12-E-D-S-P
			EPDM		1320789	DHEB-12-E-D-E-P
	14	7 mm			1320790	DHEB-14-E-D-E-P
			Silicone		1320779	DHEB-14-E-D-S-P
	18	7.5 mm	EPDM	28 g	1320791	DHEB-18-E-D-E-P
			Silicone		1320780	DHEB-18-E-D-S-P
	22	12 mm	EPDM	43 g	1320792	DHEB-22-E-D-E-P
			Silicone		1320781	DHEB-22-E-D-S-P
	27		EPDM	79 g	1320793	DHEB-27-E-D-E-P
			Silicone		1320782	DHEB-27-E-D-S-P
	33	14.5 mm	EPDM	118 g	1320794	DHEB-33-E-D-E-P
			Silicone		1320783	DHEB-33-E-D-S-P
	41	15.5 mm		280 g	1320784	DHEB-41-E-D-S-P
			EPDM		1320795	DHEB-41-E-D-E-P
	51	18 mm		490 g	1320796	DHEB-51-E-D-E-P
			Silicone		1320785	DHEB-51-E-D-S-P
	63	25 mm	EPDM	800 g	1320797	DHEB-63-E-D-E-P
			Silicone		1320786	DHEB-63-E-D-S-P

chanhvinh.com

Ordering data

DHEB-...-U-...-L - Actuating direction upwards; connection position in direction of movement

	Size	Stroke of bellows	Bellows material	Product weight	Part no.	Type
	8	3.5 mm	Silicone	16 g	1320798	DHEB-8-E-U-S-L
			EPDM		1320809	DHEB-8-E-U-E-L
	10	4 mm		17 g	1320810	DHEB-10-E-U-E-L
			Silicone		1320799	DHEB-10-E-U-S-L
	12	5.5 mm	EPDM	18 g	1320811	DHEB-12-E-U-E-L
			Silicone		1320800	DHEB-12-E-U-S-L
	14	7 mm	EPDM	20 g	1320812	DHEB-14-E-U-E-L
			Silicone		1320801	DHEB-14-E-U-S-L
	18	7.5 mm		35 g	1320802	DHEB-18-E-U-S-L
			EPDM		1320813	DHEB-18-E-U-E-L
	22	12 mm		50 g	1320814	DHEB-22-E-U-E-L
			Silicone		1320803	DHEB-22-E-U-S-L
	27		EPDM	100 g	1320815	DHEB-27-E-U-E-L
			Silicone		1320804	DHEB-27-E-U-S-L
	33	14.5 mm	EPDM	130 g	1320816	DHEB-33-E-U-E-L
			Silicone		1320805	DHEB-33-E-U-S-L
	41	15.5 mm	EPDM	300 g	1320817	DHEB-41-E-U-E-L
			Silicone		1320806	DHEB-41-E-U-S-L
	51	18 mm	EPDM	500 g	1320818	DHEB-51-E-U-E-L
			Silicone		1320807	DHEB-51-E-U-S-L
	63	25 mm		785 g	1320808	DHEB-63-E-U-S-L
			EPDM		1320819	DHEB-63-E-U-E-L

DHEB-...-U-...-P - Actuating direction upwards; connection position perpendicular to the direction of movement

	Size	Stroke of bellows	Bellows material	Product weight	Part no.	Type
	8	3.5 mm	Silicone	16 g	1320820	DHEB-8-E-U-S-P
			EPDM		1320831	DHEB-8-E-U-E-P
	10	4 mm	Silicone	17 g	1320821	DHEB-10-E-U-S-P
			EPDM		1320832	DHEB-10-E-U-E-P
	12	5.5 mm	Silicone	18 g	1320822	DHEB-12-E-U-S-P
			EPDM		1320833	DHEB-12-E-U-E-P
	14	7 mm	Silicone	20 g	1320823	DHEB-14-E-U-S-P
			EPDM		1320834	DHEB-14-E-U-E-P
	18	7.5 mm	Silicone	35 g	1320824	DHEB-18-E-U-S-P
			EPDM		1320835	DHEB-18-E-U-E-P
	22	12 mm	Silicone	50 g	1320825	DHEB-22-E-U-S-P
			EPDM		1320836	DHEB-22-E-U-E-P
	27		Silicone	100 g	1320826	DHEB-27-E-U-S-P
			EPDM		1320837	DHEB-27-E-U-E-P
	33	14.5 mm	Silicone	130 g	1320827	DHEB-33-E-U-S-P
			EPDM		1320838	DHEB-33-E-U-E-P
	41	15.5 mm	Silicone	300 g	1320828	DHEB-41-E-U-S-P
			EPDM		1320839	DHEB-41-E-U-E-P
	51	18 mm	Silicone	500 g	1320829	DHEB-51-E-U-S-P
			EPDM		1320840	DHEB-51-E-U-E-P
	63	25 mm		785 g	1320841	DHEB-63-E-U-E-P
			Silicone		1320830	DHEB-63-E-U-S-P

chanhvinh.com

Peripherals

Peripherals overview

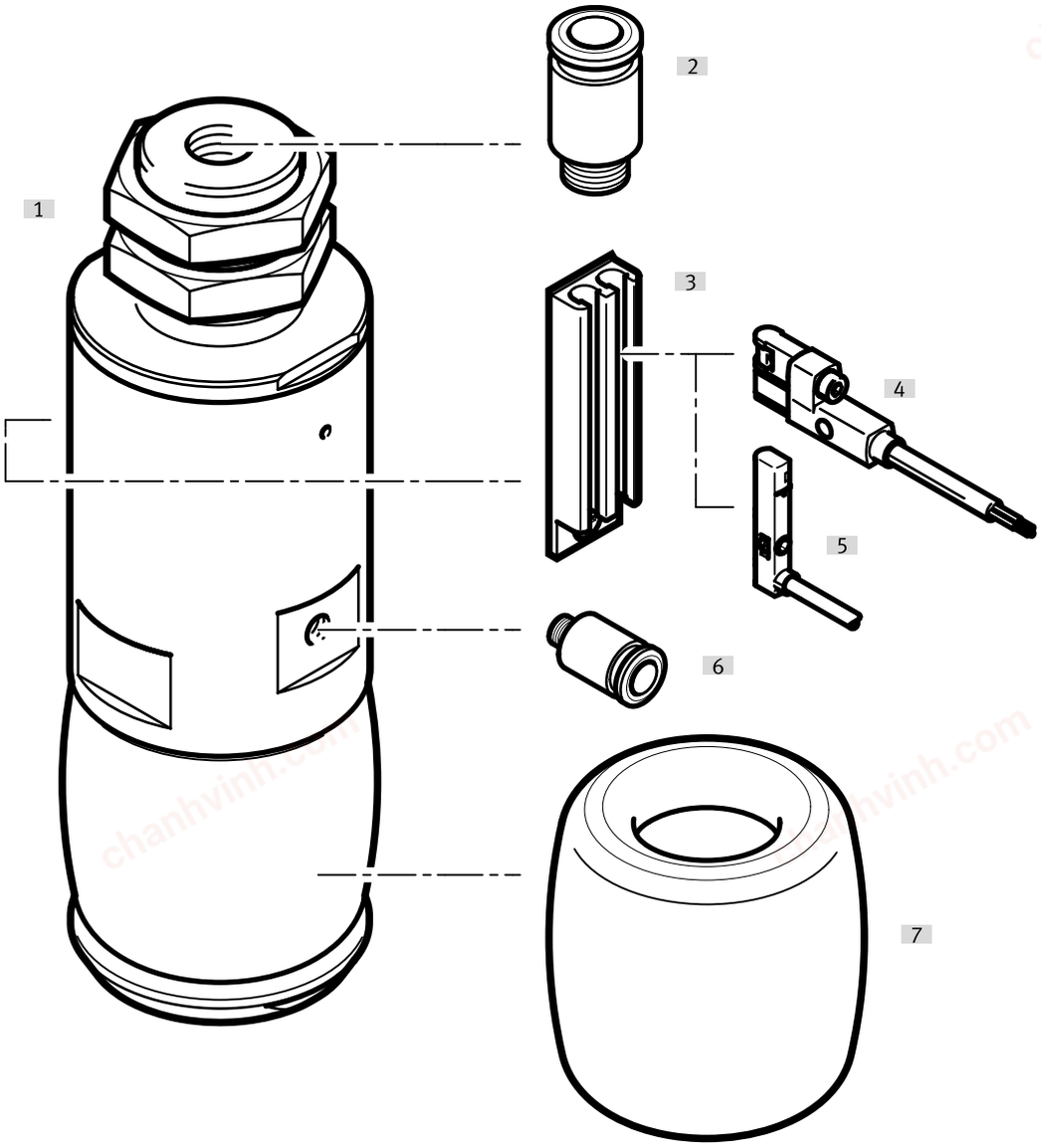

Accessories			→ Link
	Type/order code	Description	
[1]	Bellows gripper DHEB	Single-acting internal gripper	dheb
[2]	Push-in fitting QS	• For connecting tubing with standard O.D • In the variant with compressed air connection at the side DHEB-...-P, this port (with internal through-hole) can be used to cool or clean the workpiece, for example, or to check it for leaks • In the variant DHEB-...-L, this port is used to supply the gripper with compressed air	qs
[3]	Sensor rail DASP	• For mounting the proximity switches • For size 27 ... 63	19
[4]	Proximity switch SMT-10G	• For sensing the piston position • For size 27 ... 63	19
[5]	Proximity switch SME/SMT-10	• For sensing the piston position • For size 27 ... 63	19
[6]	Push-in fitting QS	• For connecting tubing with standard O.D. • In the variant with compressed air connection at the side DHEB-...-P, this port is used to supply the gripper with compressed air	qs
[7]	Bellows DHAS	Can be replaced in the event of wear	dheb

chanhvinh.com

Accessories

Sensor rail DASP-...-D – for DHEB-...-D (downward direction of movement)

	Material profile	Product weight	Part no.	Type
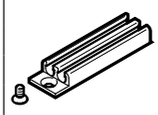	Anodised wrought aluminium alloy	4 g	1329132	DASP-G3-27-C-D
		5 g	1355309	DASP-G3-41-C-D
			1325616	DASP-G3-33-C-D
		6 g	1356949	DASP-G3-51-C-D
		7 g	1359395	DASP-G3-63-C-D

Sensor rail DASP-...-U – for DHEB-...-U (upward direction of movement)

	Material profile	Product weight	Part no.	Type
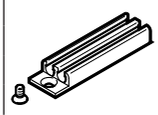	Anodised wrought aluminium alloy	4 g	1329142	DASP-G3-27-C-U
		5 g	1323641	DASP-G3-33-C-U
			1355307	DASP-G3-41-C-U
		6 g	1356889	DASP-G3-51-C-U
		7 g	1359219	DASP-G3-63-C-U

Proximity switch SMT-10M for round slot, magneto-resistive — Link smt

	Type of mounting	Switching output	Electrical connection	Cable length	Part no.	Type
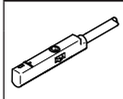	Screw-clamped, Insertable in the slot from above	3-wire PNP N/O contact	Open end	2.5 m	551373	SMT-10M-PS-24V-E-2,5-L-OE
			Plug M8, A-coded	0.3 m	551375	SMT-10M-PS-24V-E-0,3-L-M8D

Proximity switch SMT-10G for round slot, magneto-resistive — Link smt

	Type of mounting	Switching output	Electrical connection	Cable length	Part no.	Type
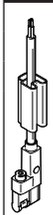	Clamped in C-slot, Insertable in the slot lengthwise	3-wire NPN N/O contact	Open end	2.5 m	8065030	SMT-10G-NS-24V-E-2,5Q-OE
			Plug M8, A-coded	0.3 m	8065029	SMT-10G-NS-24V-E-0,3Q-M8D
		3-wire PNP N/O contact	Open end	2.5 m	547862	SMT-10G-PS-24V-E-2,5Q-OE
			Plug M8, A-coded	0.3 m	547863	SMT-10G-PS-24V-E-0,3Q-M8D

Proximity switch SME-10M for round slot, magnetic reed — Link sme

	Type of mounting	Switching output	Electrical connection	Cable length	Part no.	Type
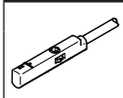	Clamped in C-slot, Insertable in the slot lengthwise	Contacting, bipolar	Open end	0.3 m	173212	SME-10-SL-LED-24
				2.5 m	173210	SME-10-KL-LED-24

Minimum distance L to be maintained between the grippers

When using the proximity switches, ferrite parts (e.g. retaining screws) can cause interference. The minimum distance L between the grippers must therefore be maintained:

- DHEB-27/33: 20 mm
- DHEB-41: 30 mm
- DHEB-51/63: 15 mm

chanhvinh.com

Accessories

Connecting cables NEBA, straight

	Electrical connection 1, connector system	Electrical connection 2, connector system	Electrical connection 2, number of connections/ cores	Cable length	Part no.	Type
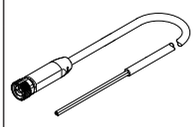	M8x1, A-coded, to EN 61076-2-104	Open end	3	2.5 m	**8078223**	**NEBA-M8G3-U-2.5-N-LE3**
				5 m	**8078224**	**NEBA-M8G3-U-5-N-LE3**

Connecting cables NEBA, angled

	Electrical connection 1, connector system	Electrical connection 2, connector system	Electrical connection 2, number of connections/ cores	Cable length	Part no.	Type
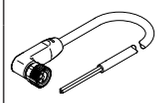	M8x1, A-coded, to EN 61076-2-104	Open end	3	2.5 m	**8078230**	**NEBA-M8W3-U-2.5-N-LE3**
				5 m	**8078231**	**NEBA-M8W3-U-5-N-LE3**