chanhvinh.com

Mini slide DGST



chanhvinh.com

chanhvinh.com

Key features

At a glance

- Compact mini slide
- Slide and yoke plate as a single component
- Excellent value for money
- High feed forces
- Symmetrical mounting interfaces
- Precise and resilient roller bearing guide
- Simple design with symmetrical mounting interfaces
- Can be operated without additional cushioning components

The technology in detail

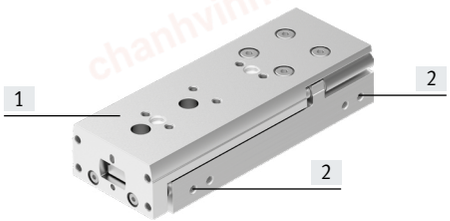



[1] Slide and yoke plate



- Slide and yoke plate as a single component, ensuring very high rigidity, precision and alignment

[2] Supply ports

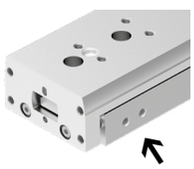

- All connections on one side

[3] Sensor slots for sensing the slide position

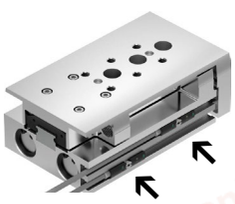

- Proximity switches can be integrated, so there are no projecting parts
- Both end positions can be sensed from one side
- Two sensor slots for sensing

[4] Cushioning and precision end-position adjustment

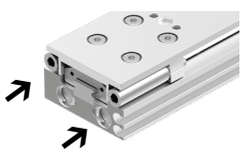

- Cushioning types:
  - Elastic cushioning rings/plates at both ends (P)
  - Elastomer cushioning, adjustable at both ends, with fixed stop (P1)
  - Elastomer cushioning, short, at both ends (E)
  - Elastomer cushioning, at both ends, stroke not adjustable (E1)
  - Shock absorber, self-adjusting, linear, at both ends, external (Y12)
- Precision end-position adjustment is possible from one end

[5] Twin-piston drive

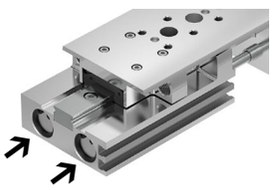

- Theoretical force at 6 bar:
  34 ... 590 N
- Max. payload:
  0.7 ... 17 kg

[6] Backlash-free piston rod/yoke connection

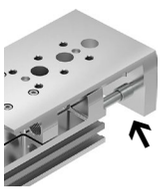

- Enhanced precision
- Longer service life

Version

[L] Mirror-imaged

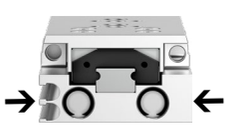

- Position of the supply ports and sensor slots is mirror-inverted

Mounting example

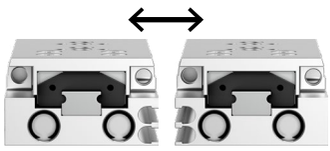

- Space-saving mounting of mini-slides next to one another

chanhvinh.com

Key features

Axial supply ports via connection kit ➔ Page 50

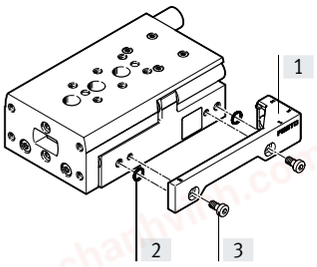

- The connection kit enables having axial supply ports
- Particularly suitable for applications in which no space is available at the side for supply ports

[1] Connection set DADG-AK-G8-...
[2] Seals
[3] Screws

Intermediate-position module ➔ Page 52

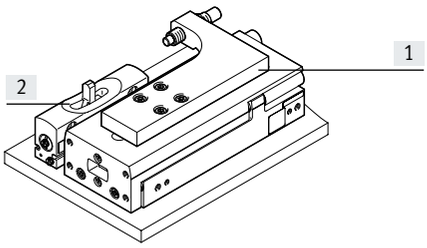

The intermediate-position module enables an additional adjustable position within the stroke range.

[1] Shock absorber retainer
[2] Intermediate-position module

- The symmetrical design means that the intermediate position can be approached when advancing or retracting, depending on the assembly
- Can be travelled through from the end position
- Possible to continue on directly from the intermediate position
- Easy to assemble
- Sensing of the stop lever position is possible

Application areas

Mainly in industry segments such as:

- Electronics and assembly technology
- Machine building
- Handling technology

Examples include the following:

- Pick & place handling units
- Piggyback handling units
- Precise positioning
- Precise press-fitting

Application examples

Pick & Place handling unit

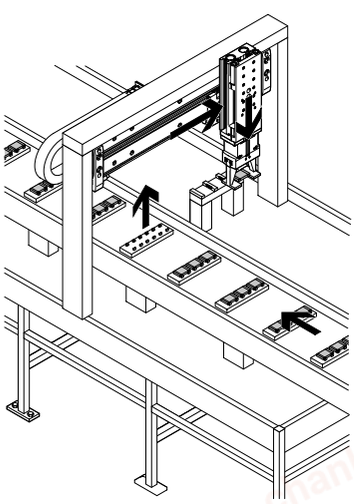

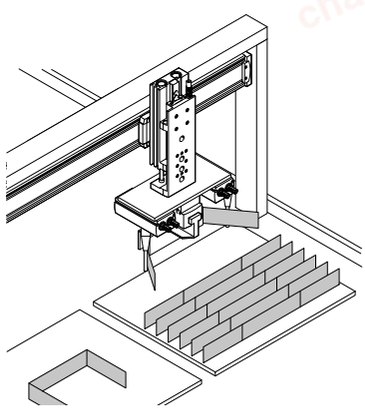

chanhvinh.com

Peripherals overview

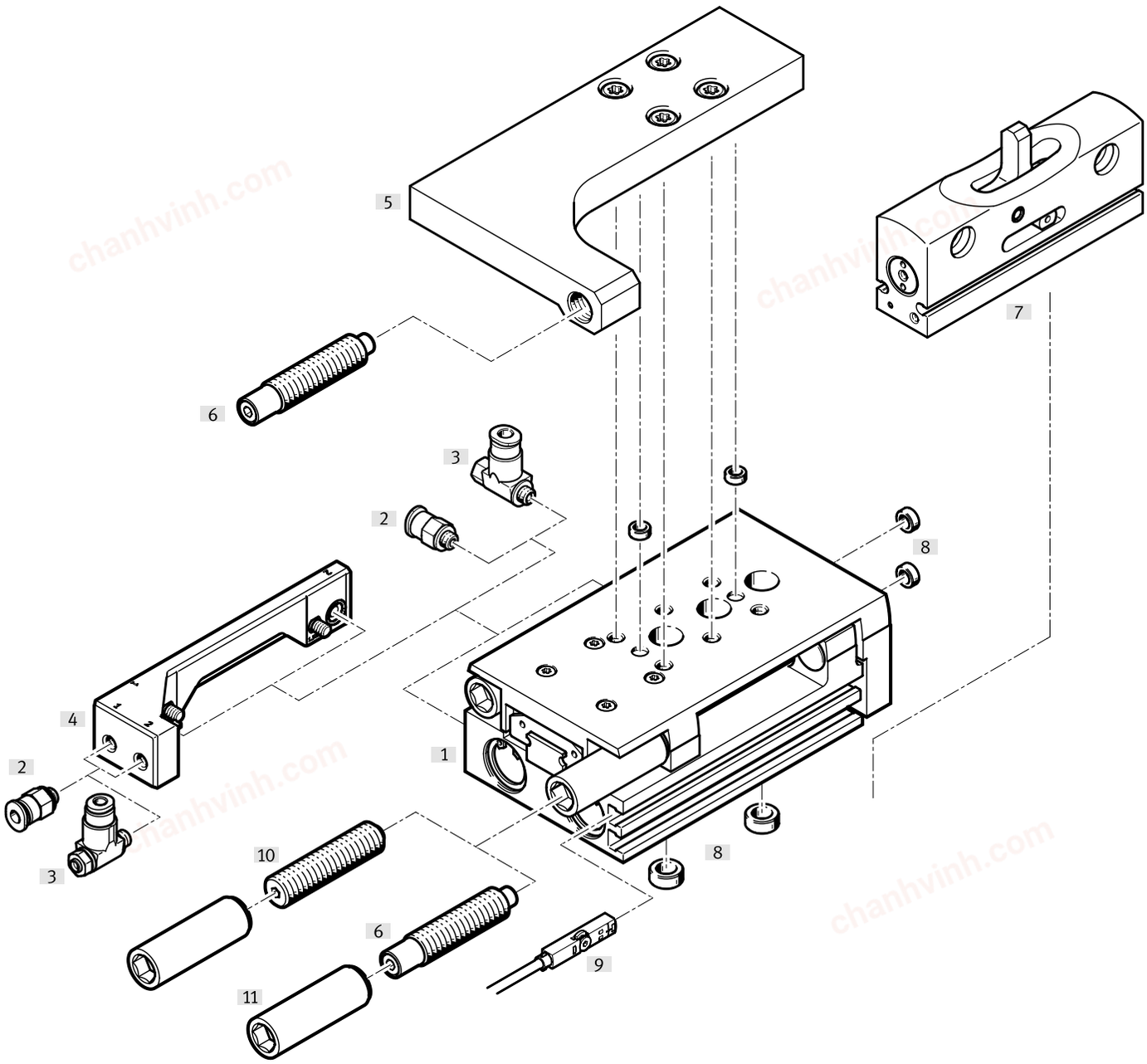

chanhvinh.com

Peripherals overview

Accessories			
		Description	**→ Page/Internet**
[1]	Mini slide DGST	Compact design	7
[2]	Push-in fitting QSM	For connecting tubing with standard O.D.	56
[3]	One-way flow control valve GRLA	For regulating speed	56
[4]	Connection set DADG-AK-G8	For axial connection of compressed air tubing	50
[5]	Shock absorber retainer DADP	• Attachment for the shock absorber • For positioning and cushioning the intermediate position	54
[6]	Cushioning Y12	Shock absorber, self-adjusting, linear, at both ends, external	55
[7]	Intermediate-position module DADM	With stop lever for the intermediate position	52
[8]	Centring sleeve ZBH	• For centring loads and attachments • (Centring sleeves not included in the scope of delivery of the mini slide)	56
[9]	Proximity switch SMT-10/-8	For position sensing Can be integrated in the sensor slot, so it does not protrude	57
	Position transmitter SMAT-8M, SDAT	• Analogue position feedback possible • Choice of analogue output: 0 ... 10 V, 0 ... 20 mA	58
[10]	Cushioning P	Elastic cushioning rings/plates at both ends	55
	Cushioning P1	Elastomer cushioning, adjustable at both ends, with fixed stop	55
	Cushioning E	Elastomer cushioning, short, at both ends	55
–	Distance sensor SOIA	For monitoring the condition of the damping elements	55
[11]	Threaded sleeve	• For mounting the cushioning components • Included in the scope of delivery for cushioning [6]/[8]	56

chanhvinh.com

Type codes

001	Series	
DGST	Slide drive	

002	Size [mm]	
6	6	
8	8	
10	10	
12	12	
16	16	
20	20	
25	25	

003	Stroke [mm]	
10	10	
20	20	
30	30	
40	40	
50	50	
80	80	
100	100	
125	125	
150	150	
200	200	

004	Version	
	Standard	
L	Mirror-inverted	

005	Cushioning	
P	Elastic cushioning rings/plates on both sides	
P1	Elastomer cushioning, adjustable on both sides, with fixed stop	
E	Elastomer cushioning, short, on both sides	
E1	Elastomer cushioning, double-sided, stroke not adjustable	
Y12	Shock absorber, self-adjusting, linear at both ends, external	

006	Position sensing	
A	For proximity sensor	

007	Special material properties	
	None	
F1A	Recommended for production facilities for the manufacture of lithium-ion batteries	

008	Lubrication	
	Standard	
H1	Food-safe lubrication	

chanhvinh.com

Datasheet

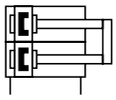

- Ø - Size
  6 ... 25
- l - Stroke length
  10 ... 200 mm



General technical data								
Size		6	8	10	12	16	20	25
Design		Twin piston, piston rod, slide, yoke						
Guide		Recirculating ball bearing guide					Three-part cage guide	
Operating mode		Double-acting						
Type of mounting		Via through-hole						
		With female thread						
Pneumatic connection		M3	M5				G1/8	
Stroke[1]	[mm]	10 ... 50	10 ... 80	10 ... 100	10 ... 100	10 ... 150	10 ... 200	10 ... 200
Cushioning								
DGST-...-P		Elastic cushioning rings/plates at both ends						
DGST-...-P1		Elastomer cushioning, adjustable at both ends, with fixed stop						
DGST-...-E		Elastomer cushioning, short, at both ends						
DGST-...-E1		Elastomer cushioning, at both ends, stroke not adjustable						
DGST-...-Y12		Shock absorber, self-adjusting, linear, at both ends, external						
Max. cushioning length								
DGST-...-P/-E	[mm]	0.9	1.5	1.5	1.3	1	1.2	1.2
DGST-...-P1	[mm]	1.7	2.8	3.1	3.4	3.7	–	–
DGST-...-E1[2]	[mm]	0.25/0.9	0.5/1.5	0.6/1.6	0.5/1.1	0.6/0.8	0.5/1	0.5/1.2
DGST-...-Y12	[mm]	4	4	4	5	5	8	10
Position sensing		Via proximity switch						
Mounting position		Any						
Max. speed								
DGST-...-P/-E	[m/s]	0.5	0.8					
DGST-...-P1	[m/s]	0.45	0.5				–	–
DGST-...-E1	[m/s]	0.5						
DGST-...-Y12	[m/s]	0.5	0.8					
Repetition accuracy								
DGST-...-P/-E/-E1	[mm]	≤ 0.3						
DGST-...-P1[3]/-Y12	[mm]	≤ 0.02						

1) For variant DGST...-E1, the actual stroke is slightly longer ➔ page 18
2) Advanced end position/retracted end position
3) Variant P1 only available for sizes 6 ... 16

Operating and environmental conditions								
Size		6	8	10	12	16	20	25
Operating medium		Compressed air to ISO 8573-1:2010 [7:4:4]						
Information on the operating medium		Lubricated operation possible (in which case lubricated operation will always be required)						
Operating pressure[1]	[MPa]	0.15 ... 0.8		0.1 ... 0.8				
	[psi]	21.75 ... 116		14.5 ... 116				
	[bar]	1.5 ... 8		1 ... 8				
Ambient temperature	[°C]	–10 ... +60						
Corrosion resistance class CRC[2]		1 - Low corrosion stress						

1) For sizes 6/8/10/12, the min. operating pressure may increase slightly after an idle period > 24 h.
2) More information: www.festo.com/x/topic/crc

chanhvinh.com

Datasheet

Forces and impact energy								
Size		6	8	10	12	16	20	25
Theoretical force at 6 bar, advancing	[N]	34	60	94	136	241	377	589
Theoretical force at 6 bar, retracting	[N]	25	45	79	102	207	317	495
Impact energy in the end positions								
DGST-...-P/-E	[J]	0.018	0.05	0.08	0.12	0.25	0.35	0.45
DGST-...-P1	[J]	0.005	0.02	0.03	0.04	0.06	–	–
DGST-...-E1	[J]	0.012	0.03	0.05	0.07	0.15	0.2	0.3
DGST-...-Y12, per stroke	[J]	0.1	0.4	0.8	1.4	2	3	6
Max. operating frequency								
DGST-...-Y12	[Cycles/min]	50	80	80	80	70	50	50

For cushioning DGST-...-P/-P1/-E/-E1, the following applies:

Permissible impact velocity:

$$v = \sqrt{\frac{2 \cdot E}{m_1 + m_2}}$$

Maximum permissible mass:

$$m_2 = \frac{2 \cdot E}{v^2} - m_1$$

v permissible impact speed
E Maximum impact energy
m_1 Moving mass (drive)
m_2 Moving payload

Note

These specifications represent the maximum values that can be achieved. The maximum permissible impact energy must be observed.

For cushioning DGST...-Y12, the following applies:

Permissible impact velocity:

$$v = \sqrt{\frac{2 \cdot (E - (F + (m_1 + m_2) \cdot g \cdot \sin(\alpha)) \cdot s)}{m_1 + m_2}}$$

Maximum permissible mass:

$$m_2 = \frac{E - F \cdot s}{\frac{1}{2} \cdot v^2 + g \cdot s \cdot \sin(\alpha)} - m_1$$

v Permissible impact speed
E Kinetic impact energy
F Cylinder force minus friction force
m_1 Moving mass (drive)
m_2 Moving payload
g Gravitational acceleration
s Shock absorber stroke
a Impact angle
v Impact velocity

Note

These specifications represent the maximum values that can be achieved. The maximum permissible impact energy must be observed.

chanhvinh.com

chanhvinh.com

Datasheet

Weight [g]								
Size	Stroke [mm]	6	8	10	12	16	20	25
Product weight without cushioning component								
	10	90	129	247	391	454	978	1463
	20	107	154	254	456	482	986	1528
	30	124	176	292	501	510	994	1547
	40	140	200	324	563	629	1055	1743
	50	172	236	359	611	690	1196	1816
	80	–	310	496	776	930	1618	2452
	100	–	–	561	988	1060	1962	2868
	125	–	–	–	–	1294	2346	3507
	150	–	–	–	–	1402	2686	3927
	200	–	–	–	–	–	3275	4803
Moving mass without cushioning component								
	10	49	69	124	195	235	440	714
	20	57	80	134	238	256	448	738
	30	65	92	146	242	277	455	762
	40	73	103	165	284	324	498	877
	50	88	122	177	290	342	549	897
	80	–	155	240	360	462	759	1217
	100	–	–	269	465	515	890	1388
	125	–	–	–	–	637	1068	1703
	150	–	–	–	–	660	1221	1877
	200	–	–	–	–	–	1460	2282
Cushioning elements (1 cushion and 1 threaded sleeve)[1)]								
DGST-...-P		5	8.4	11.7	23	41	72.5	136.5
DGST-...-P1		4.5	7.6	10.8	20.9	37.6	–	–
DGST-...-E		3.5	4.8	6.9	14.6	26	41	67
DGST-...-Y12		3.9	7.8	10.2	16	33	57	105

1) Add 1x for moving mass and 2x for total mass.

Materials

Sectional view

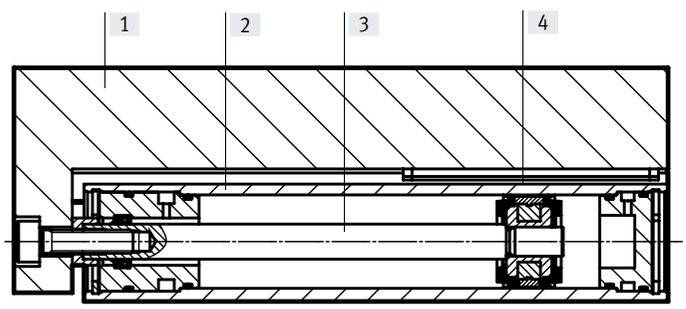

Mini slide		
[1]	Slide	Wrought aluminium alloy
[2]	Housing	Wrought aluminium alloy
[3]	Piston rod	High-alloy stainless steel
[4]	Guide	POM TPE-E High-alloy steel
–	Cover	Wrought aluminium alloy
	Seals	HNBR
	Note on materials	RoHS-compliant
	LABS (PWIS) conformity	VDMA24364-B1/B2-L
	Cleanroom class	Class 6 to ISO 14644-1
	Suitable for the production of Li-ion batteries	Suitable for battery production with reduced Cu/Zn/Ni values (F1a)

chanhvinh.com

Datasheet

Perpendicularity

The term perpendicularity refers to the alignment accuracy between the slide surface and the yoke plate.

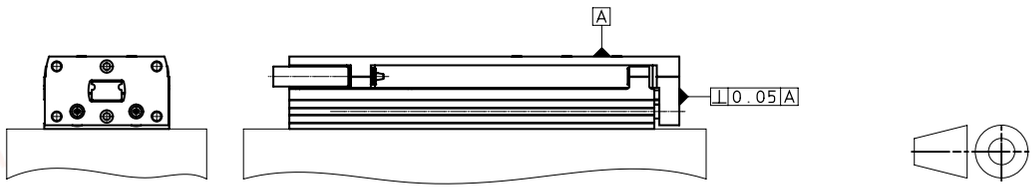

Size	6	8	10	12	16	20	25
	≤ 0.05						

Parallelism

The term parallelism refers to the alignment accuracy between the mounting surface and the slide surface in longitudinal direction.

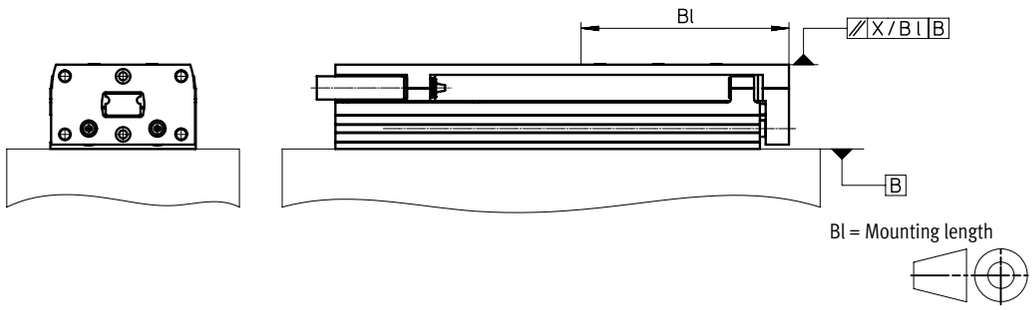

Size Stroke [mm]	6	8	10	12	16	20	25
10	0.092/43 [1]	0.09/45	0.093/54	0.086/55	0.089/61	0.081/80	0.088/90
20	0.082/43	0.081/45	0.09/54	0.08/55	0.085/61	0.081/80	0.088/90
30	0.079/43	0.078/45	0.084/54	0.076/55	0.081/61	0.081/80	0.082/90
40	0.114/65	0.118/70	0.085/54	0.075/55	0.083/61	0.075/80	0.076/90
50	0.096/65	0.103/70	0.113/76	0.101/77	0.109/85	0.065/80	0.07/90
80	–	0.095/70	0.091/76	0.095/77	0.084/85	0.074/130	0.074/130
100	–	–	0.091/76	0.072/77	0.098/101	0.062/130	0.061/130
125	–	–	–	–	0.081/101	0.063/160	0.063/160
150	–	–	–	–	0.079/101	0.055/160	0.055/160
200	–	–	–	–	–	0.044/160	0.044/160

1) Parallelism/mounting length

Linearity

The term linearity refers to the alignment accuracy between the mounting surface and the slide surface in relation to the stroke.

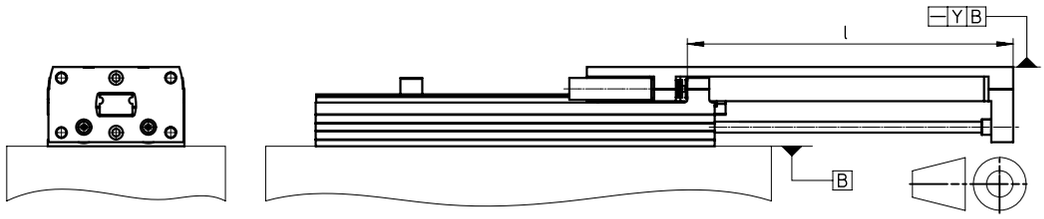

Size Stroke [mm]	6	8	10	12	16	20	25
10	0.013	0.012	0.011	0.011	0.01	0.009	0.009
20	0.021	0.02	0.018	0.016	0.016	0.014	0.014
30	0.025	0.024	0.023	0.021	0.021	0.02	0.018
40	0.029	0.028	0.026	0.025	0.025	0.022	0.021
50	0.031	0.029	0.029	0.027	0.026	0.024	0.023
80	–	0.034	0.032	0.032	0.03	0.02	0.027
100	–	–	0.035	0.032	0.032	0.027	0.027
125	–	–	–	–	0.033	0.028	0.028
150	–	–	–	–	0.035	0.03	0.03
200	–	–	–	–	–	0.032	0.032

Note: The values apply in an unpressurised state. When variants DGST with external cushioning are pressurised with compressed air, this may be result in a pitching motion.

chanhvinh.com

Datasheet

Adjustable end-position range

Precision adjustment of the advanced and retracted end positions

The required stroke reduction can be precisely adjusted with the cushioning components.

Advantages:

- No readjustment required; position is fully maintained under lock and load
- Stroke can be reduced to the next smaller standard stroke
- Fast and simple adjustment using two tools

Step 1:
Screw the cushioning component and sleeve into the holder using a hex wrench until the stop is reached

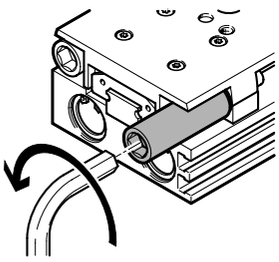

Step 2:
Set the exact end position using a smaller hex wrench

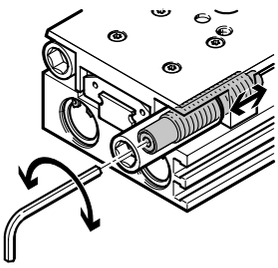

Step 3:
Secure the cushioning component by tightening the sleeve

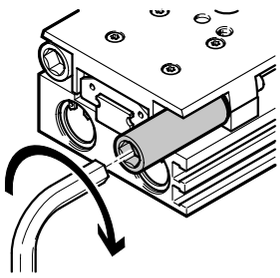

End-position adjustment

Dimensions:
For DGST-...-P: ➔ page 38
For DGST-...-P1 ➔ page 40
For DGST-...-E ➔ page 42
For DGST-...-Y12: ➔ page 44

Note

Adjust and secure the shock absorber under pressure.

chanhvinh.com

Datasheet

Dynamic load values

The indicated torques refer to the centre of the guide.
These values must not be exceeded during dynamic operation. Special attention must be paid to the cushioning phase.

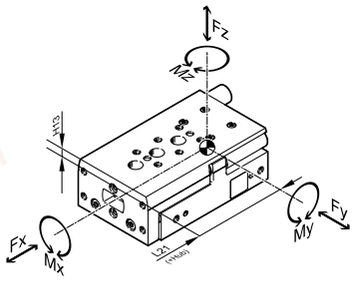

If the drive is simultaneously subjected to several of the forces and torques indicated below, the following equation must be satisfied in addition to the indicated maximum loads:

$$f_v = \frac{|F_{y1}|}{F_{y2}} + \frac{|F_{z1}|}{F_{z2}} + \frac{|M_{x1}|}{M_{x2}} + \frac{|M_{y1}|}{M_{y2}} + \frac{|M_{z1}|}{M_{z2}} \leq 1$$

f_v = load comparison factor
F_1 = dynamic value
F_2 = maximal value

Position of the guide centre

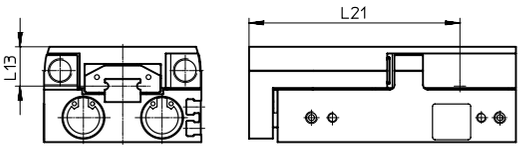

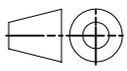

Calculation example

Assuming:

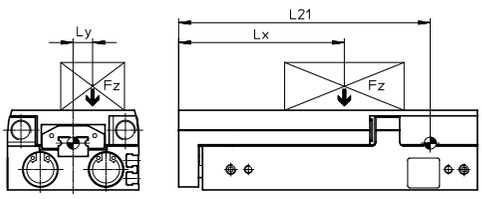

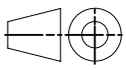

Mini slide = DGST-10-80
Lever arm L_x = 0.05 m
Lever arm L_y = 0.03 m
Mass F_z = 0.8 kg
Acceleration a = 0 m/s²

To be determined:

F_y, F_z, Mx, My, Mz
and
Functional operation with combined load

Solution:

L21 = 0.1102 m from table

F_y = 0 N

F_z = m x g
= 0.8 kg x 9.81 m/s² = 7.848 N

M_x = m x g x L_y
= 0.8 kg x 9.81 m/s² x 0.03 m = 0.236 Nm

M_y = m x g x (L21 – L_x)
= 0.8 kg x 9.81 m/s² x (0.1102 m – 0.05 m) = 0.47 Nm

M_z = 0 Nm

Combined load:

$$f_v = \frac{|F_{y1}|}{F_{y2}} + \frac{|F_{z1}|}{F_{z2}} + \frac{|M_{x1}|}{M_{x2}} + \frac{|M_{y1}|}{M_{y2}} + \frac{|M_{z1}|}{M_{z2}} \leq 1$$

$$= 0 + \frac{7{,}848\ N}{520\ N} + \frac{0{,}236\ Nm}{6\ Nm} + \frac{0{,}47\ Nm}{5\ Nm} + 0 = 0{,}148 \leq 1$$

Permissible forces and torques					Geometric characteristics	
Size	Stroke [mm]	Fy_{max}, Fz_{max} [N]	Mx_{max} [Nm]	My_{max}, Mz_{max} [Nm]	L13 [mm]	L21 [mm]
6						
	10	200	1.1	0.7	9.35	31
	20	220	1.1	1		39.5
	30	240	1.1	1.2		51
	40	260	1.2	1.2		59.5
	50	280	1.4	1.2		73.5
8						
	10	250	2	2	10.75	31
	20	275	2	2		39.5
	30	300	2.8	2		51
	40	325	3	2.5		59.5
	50	350	3.2	3		73.5
	80	375	3.2	3		103.5

Datasheet

Permissible forces and torques					Geometric characteristics	
Size	Stroke [mm]	Fy_{max}, Fz_{max} [N]	Mx_{max} [Nm]	My_{max}, Mz_{max} [Nm]	L13 [mm]	L21 [mm]
10						
	10	470	3	3	12.25	45.7
	20	480	3	3		45.7
	30	490	3.5	3		58.5
	40	500	4	4.5		65.7
	50	510	5	4.5		78.5
	80	520	6	5		110.2
	100	530	6	6		130.2
12						
	10	500	4.2	4.2	14.5	43
	20	520	4.2	4.2		53
	30	540	4.2	4.2		63
	40	560	5.8	5.8		73
	50	580	7	5.8		83
	80	600	8.9	6.5		113
	100	620	10	6.8		139
16						
	10	820	11.3	7	16.5	48.5
	20	840	11.3	7		55.5
	30	860	11.3	7.5		59.5
	40	880	11.3	8		71.5
	50	900	11.3	8		88.5
	80	920	12	10		119
	100	940	12	10		139
	125	960	14	15		171.5
	150	960	14	16		196.5
20						
	10	1600	16	18	16	70
	20	1270	13	14		70
	30	1110	11	12		71
	40	930	10	11		82
	50	1080	9	10		93.6
	80	1030	14	11		131.4
	100	1160	18	11		160.3
	125	1380	20	17		192.6
	150	1300	20	17		222.8
	200	1170	20	17		279.6
25						
	10	1840	19	21	21	69.2
	20	1460	16	16		69.2
	30	1280	14	14		78.2
	40	1310	13	12		88.2
	50	1080	12	11		98.2
	80	1030	14	11		133.4
	100	1160	18	11		162.8
	125	1380	20	17		194.6
	150	1300	20	17		224.8
	200	1170	20	17		281.6

Datasheet

Payload m as a function of impact velocity v and cushioning P/P1/E/E1

DGST-6

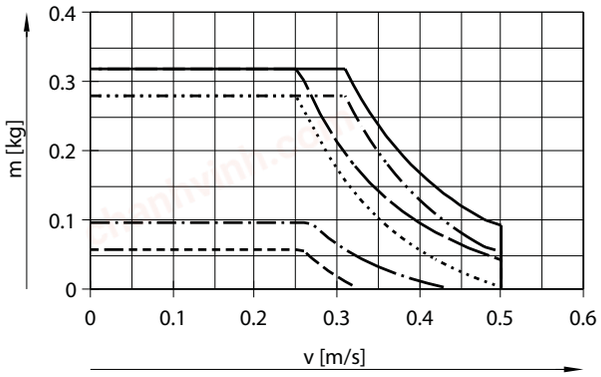

- DGST-6-10-E/-P
- DGST-6-50-E/-P
- DGST-6-10-E1
- DGST-6-50-E1
- DGST-6-10-P1
- DGST-6-50-P1

DGST-8

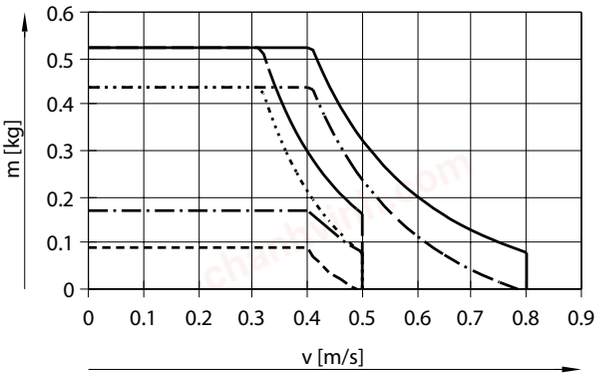

- DGST-8-10-E/-P
- DGST-8-80-E/-P
- DGST-8-10-E1
- DGST-8-80-E1
- DGST-8-10-P1
- DGST-8-80-P1

DGST-10

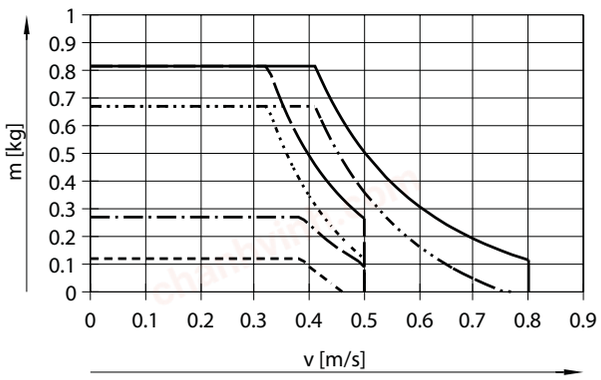

- DGST-10-10-E/-P
- DGST-10-100-E/-P
- DGST-10-10-E1
- DGST-10-100-E1
- DGST-10-10-P1
- DGST-10-100-P1

DGST-12

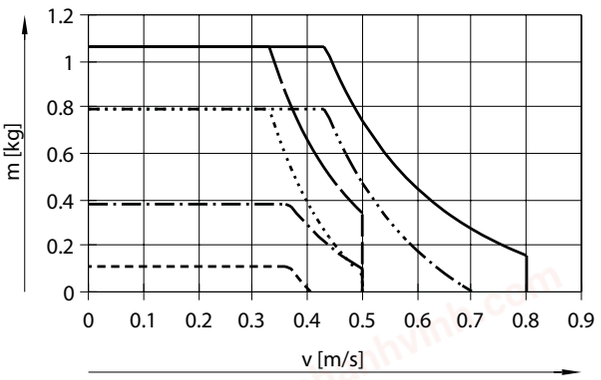

- DGST-12-10-E/-P
- DGST-12-100-E/-P
- DGST-12-10-E1
- DGST-12-100-E1
- DGST-12-10-P1
- DGST-12-100-P1

chanhvinh.com

Datasheet

Payload m as a function of impact velocity v and cushioning P/P1/E/E1

DGST-16

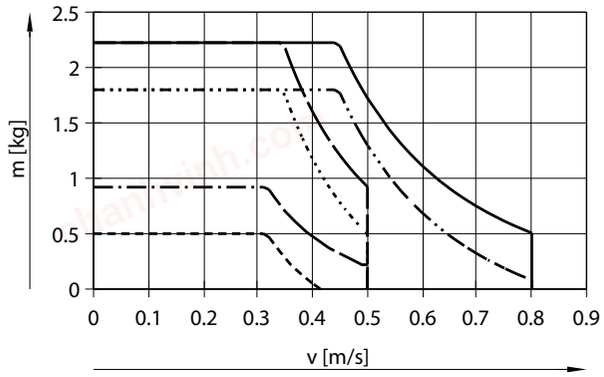

- DGST-16-10-E/-P
- DGST-16-150-E/-P
- DGST-16-10-E1
- DGST-16-150-E1
- DGST-16-10-P1
- DGST-16-150-P1

DGST-20

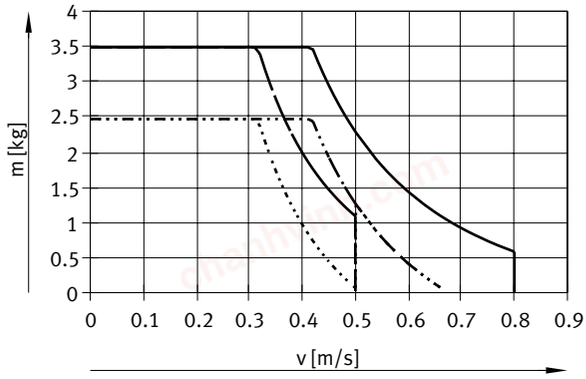

- DGST-20-10-E/-P
- DGST-20-200-E/-P
- DGST-20-10-E1
- DGST-20-200-E1

DGST-25

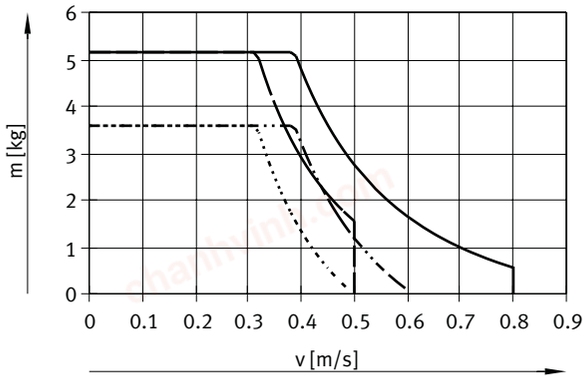

- DGST-25-10-E/-P
- DGST-25-200-E/-P
- DGST-25-10-E1
- DGST-25-200-E1

chanhvinh.com

chanhvinh.com

Datasheet

Payload m as a function of impact velocity v and cushioning Y12

DGST-6

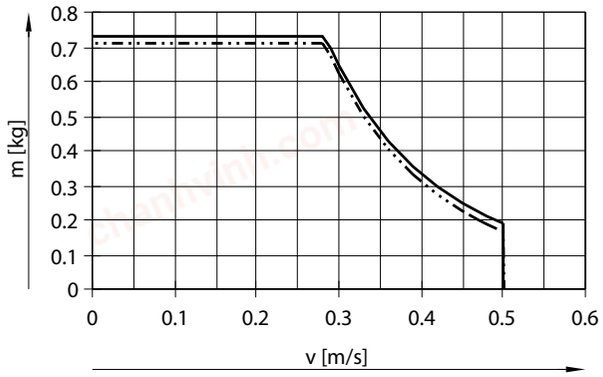

DGST-6-30-Y12
DGST-6-50-Y12

DGST-8

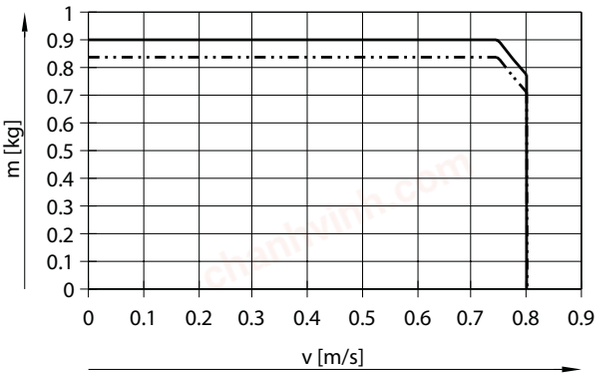

DGST-8-30-Y12
DGST-8-80-Y12

DGST-10

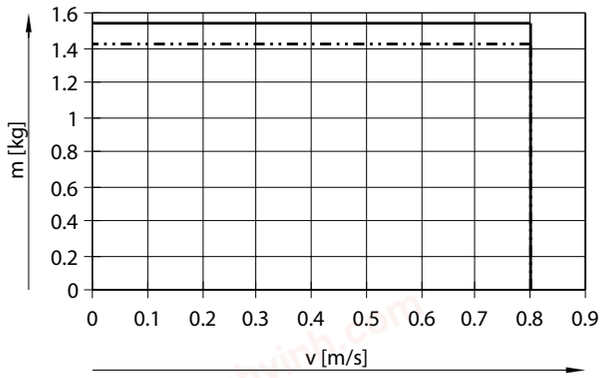

DGST-10-30-Y12
DGST-10-100-Y12

DGST-12

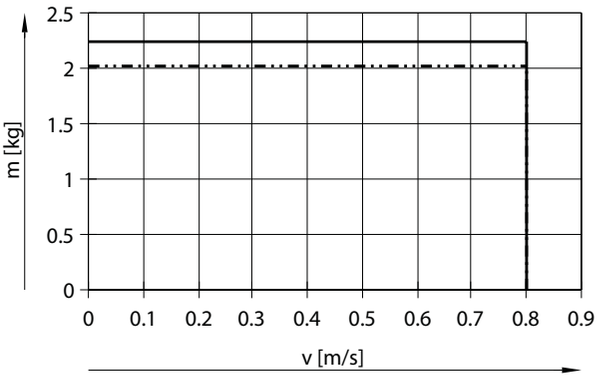

DGST-12-30-Y12
DGST-12-100-Y12

chanhvinh.com

chanhvinh.com

Datasheet

Payload m as a function of impact velocity v and cushioning Y12

DGST-16

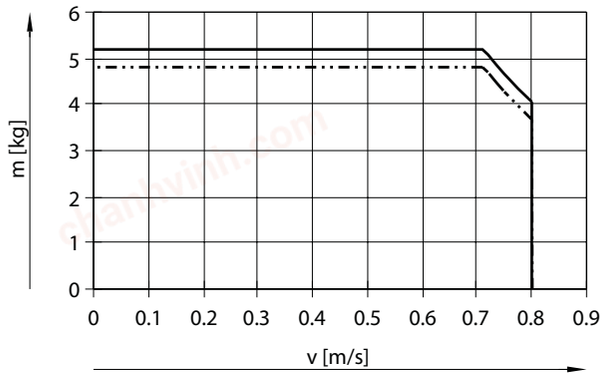

DGST-16-30-Y12
DGST-16-150-Y12

DGST-20

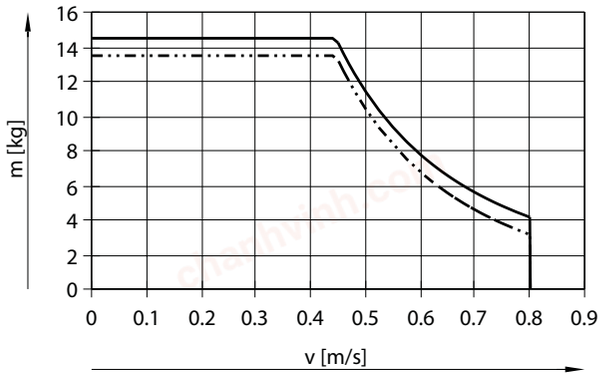

DGST-20-30-Y12
DGST-20-200-Y12

DGST-25

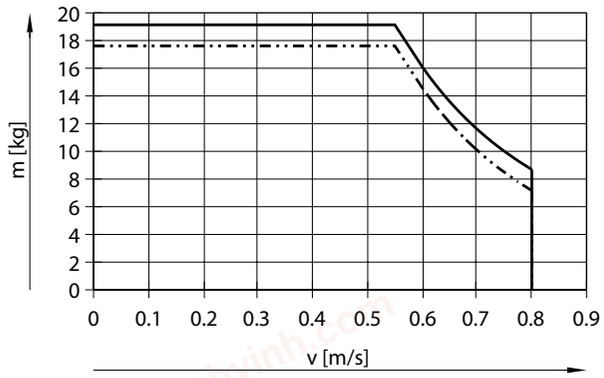

DGST-25-30-Y12
DGST-25-200-Y12

chanhvinh.com

Datasheet

Dimensions Download CAD data ➔ www.festo.com

[ ] Standard

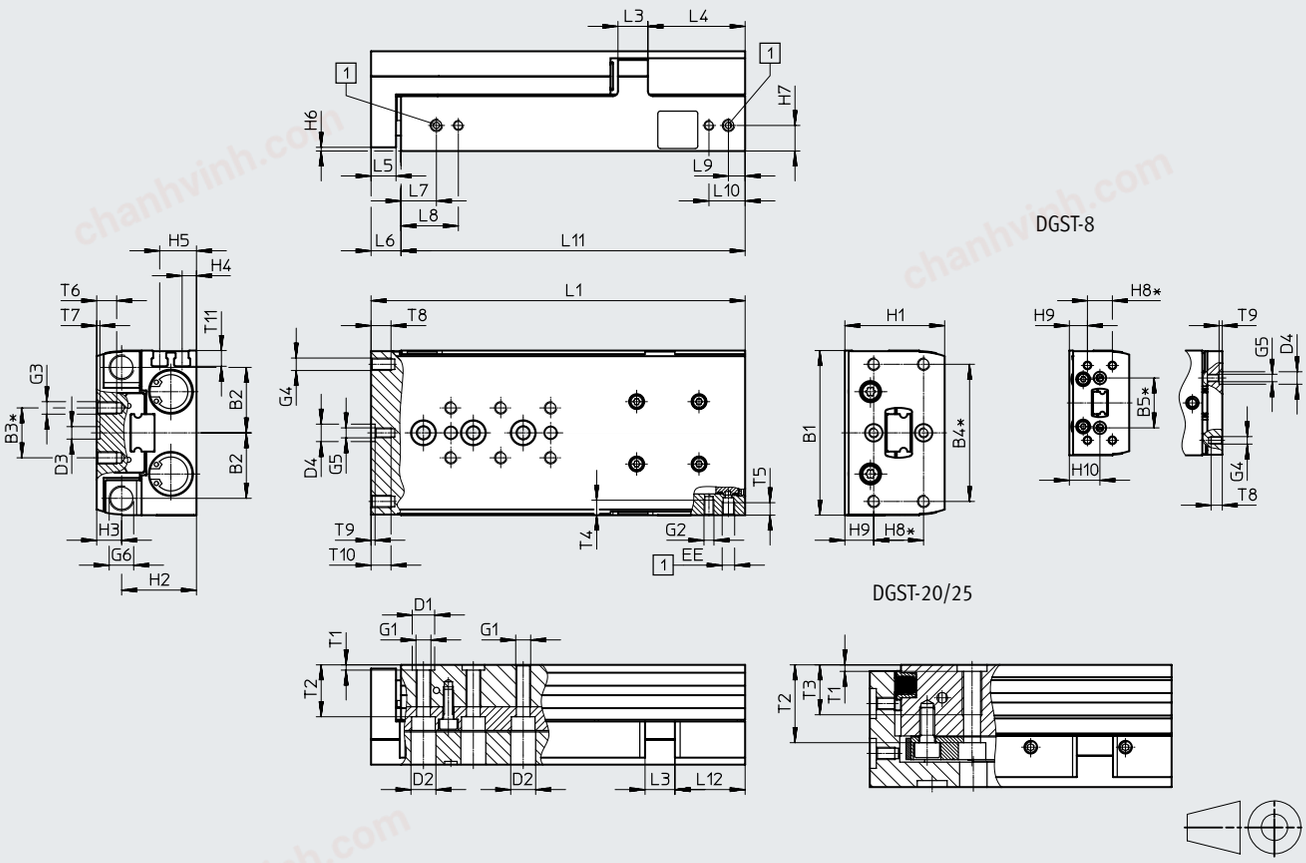

Actual stroke with variant DGST-...-E1 =
stroke + additional stroke without cushioning + cushioning stroke
(values ➔ page 19)

[1] = Supply ports
* = ±0.02 mm applies to the centring
= ±0.1 mm applies to the thread

Size	B1	B2	B3 ±0.1	B4 ±0.1	B5	D1 ø H7	D2 ø	D3 ø H7	D4 ø	EE	G1	G2	G3	G4
6	35	14.4	10	30	–	5	6	5	2^{H8}	M3	M4	M3	M3	M3
8	42	17	10	30	20	5	6	5	5^{H7}	M5	M4	M3	M3	M3
10	50	20.8	20	40	–	7	8	5	5^{H7}	M5	M5	M4	M4	M4
12	60	24.5	20	40	–	7	8	5	7^{H7}	M5	M5	M4	M4	M4
16	66	26.3	20	55	–	9	10	5	7^{H7}	M5	M6	M4	M5	M5
20	85	34.5	40	70	–	12	11	12	12^{H7}	G1/8	M8	M5	M5	M5
25	104	42	40	80	–	12	11	12	12^{H7}	G1/8	M8	M6	M6	M6

Size	G5	G6	H1	H2	H3	H4	H5	H6	H7	H8	H9	H10	L3	L4
6	–	M4x0.5	20	14.5	5.5	2.5	7	1.5	4.5	10	5	–	5	22
8	M3	M5x0.5	24	17.7	6.3	3.1	8.1	1.5	5.6	10	7.3	12.3	6	30.5
10	M3	M6x0.5	29	21	8	4	10	1.5	7	20	5	–	8	31
12	M4	M8x1	36	26.5	9.5	5.9	11.9	1.5	8.9	20	9.5	–	10	36
16	M4	M10x1	40	30	10	5.8	14.8	1.5	10.3	20	11.6	–	12	39
20	M5	M12x1	49	36.5	12.5	8.7	17.7	2.5	13.2	20	15.5	–	14.5	51
25	M6	M14x1	60	44.5	15.5	11	21	2.5	16	40	10	–	17.5	65

chanhvinh.com

Datasheet

Size	L5	L6[1]	L7	L8[2]	L9	L10[2]	T1	T2	T3[3] max.	T4[3] max.	T5[3] max.
6	6	8	8.5	15.4	5.8	12.7	$1.3^{+0.1}$	8.9	–	4	4
8	6	8	8.5	16.5	5.5	13.5	$1.3^{+0.1}$	11.5	–	5	4.5
10	8	10	8.9	17.9	6.6	15.6	$1.6^{+0.1}$	14.5	–	6.2	5
12	8	10	10.7	19.5	7	15.8	$1.6^{+0.1}$	19.8	–	7	5.5
16	10	12	14.2	23	6.7	15.5	$2.1^{+0.1}$	20.8	–	6	5
20	10	12.5	16.5	30.5	8	22	$2.6^{+0.3}$	31.2	20	8	8.5
25	12	14.5	16.5	31.5	10.5	25.5	$2.6^{+0.3}$	37.2	20	9.5	8

Size	T7	T8[3] max.	T9	T10[3] max.	T11	Additional stroke without cushioning with variant DGST-...-E1		Max. cushioning stroke in the end positions with variant DGST-...-E1	
						min.	max.	Advanced	Rear
6	$1.3^{+0.1}$	4.5	–	–	4.6	0.65	1.3	0.25	0.9
8	$1.3^{+0.1}$	4.5	$1.3^{+0.1}$	–	5	0	0.7	0.5	1.6
10	$1.3^{+0.1}$	6.5	$1.3^{+0.1}$	6.5	5.9	0	0.7	0.6	1.6
12	$1.3^{+0.1}$	6.5	$1.6^{+0.1}$	8	7	0.4	1.1	0.5	1.1
16	$1.3^{+0.1}$	8	$1.6^{+0.1}$	8	6.3	0.65	1.4	0.6	0.65
20	$2.6^{+0.3}$	8	$2.6^{+0.3}$	10	9.1	0.4	1.1	0.5	1
25	$2.6^{+0.3}$	10	$2.6^{+0.3}$	13	8.8	0.5	1.2	0.5	1.2

Stroke [mm] / Size	10	20	30	40	50	80	100	125	150	200
	L1[1]									
6	48	58	68	78	95	–	–	–	–	–
8	51	61	71	81	95	126	–	–	–	–
10	66	68	78	88	98	136	156	–	–	–
12	66	76	86	96	106	136	169.5	–	–	–
16	73	80	87	97	112	150	170	210	235	–
20	97	97	97	107	121	166	204.5	244	279	343
25	102	102	108	118	128	168	207	246	281	345
	L11									
6	40	50	60	70	87	–	–	–	–	–
8	43	53	63	73	87	118	–	–	–	–
10	56	58	68	78	88	126	146	–	–	–
12	56	66	76	86	96	126	159.5	–	–	–
16	61	68	75	85	100	138	158	198	223	–
20	84.5	84.5	84.5	94.5	108.5	153.5	192	231.5	266.5	330.5
25	87.5	87.5	93.5	103.5	113.5	153.5	192.5	231.5	266.5	330.5
	L12									
6	16	16	16	16	22	–	–	–	–	–
8	15.7	15.7	15.7	15.7	19.7	20.7	–	–	–	–
10	24.6	16.6	16.6	16.6	16.6	24.6	24.6	–	–	–
12	20.6	20.6	20.6	20.6	20.6	20.6	34.1	–	–	–
16	21.2	18.2	15.2	15.2	20.2	28.2	28.2	39	39	–
20	39.5	29.5	19.5	19.5	23.5	38.5	51	51	51	51
25	36.5	26.5	22.5	22.5	22.5	32.5	51.5	65	65	65
	T6 (max.)[3]									
6	4	4	4	4	4	–	–	–	–	–
8	5.5	5.5	5.5	5.5	5.5	5.5	–	–	–	–
10	4.5	4.5	4.5	4.5	4.5	7.5	7.5	–	–	–
12	5.2	5.2	5.2	5.2	5.2	8	8	–	–	–
16	7.2	7.2	7.2	7.2	7.2	8	8	8	8	–
20	8	8	8	8	8	8	8	8	8	8
25	11	11	11	11	11	11	11	11	11	11

1) At an operating pressure of 6 bar for variant E1. For the other cushioning variants, LD1 applies ➔ page 38 ff.
2) Not available in sizes 6 and 8 with stroke 10 mm. For size 16 with stroke 80 ... 150 mm, the dimension is 14.5 mm
3) Max. screw-in depth

chanhvinh.com

Datasheet

Dimensions Download CAD data ➔ www.festo.com

[L] Mirror-imaged

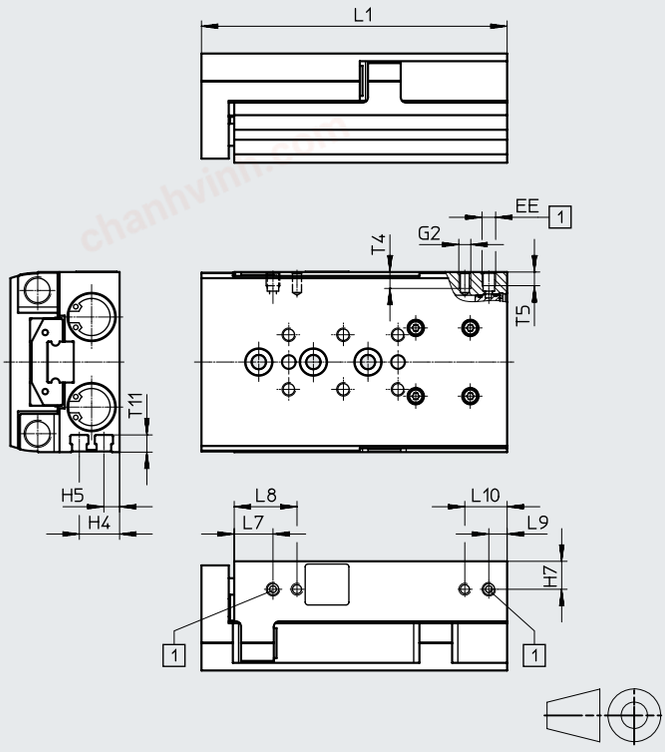

+ = plus stroke length

[1] Supply ports

Note

In the mirror-inverted version, the supply ports and sensor slots are located on the opposite side when compared with the standard version. This enables the space-saving mounting of the mini-slides next to one another.

All further dimensions are identical to the standard version ➔ page 18

chanhvinh.com

Datasheet

Size	EE	G2	H4	H5	H7	L7	L8[2]	L9	L10[2]	T4[3] max.	T5[3] max.	T11
6	M3	M3	2.5	7	4.5	8.5	15.4	5.8	12.7	4	4	4.6
8	M5	M3	3.1	8.1	5.6	8.5	16.5	5.5	13.5	5	4.5	5
10	M5	M4	4	10	7	8.9	17.9	6.6	15.6	6.2	5	5.9
12	M5	M4	5.9	11.9	8.9	10.7	19.5	7	15.8	7	5.5	7
16	M5	M4	5.8	14.8	10.3	14.2	23	6.7	15.5	6	5	6.3
20	G1/8	M5	8.7	17.7	13.2	16.5	30.5	8	22	8	8.5	9.1
25	G1/8	M6	11	21	16	16.5	31.5	10.5	25.5	9.5	8	8.8

Stroke [mm] / Size	10	20	30	40	50	80	100	125	150	200
	L1[1]									
6	48	58	68	78	95	–	–	–	–	–
8	51	61	71	81	95	126	–	–	–	–
10	66	68	78	88	98	136	156	–	–	–
12	66	76	86	96	106	136	169.5	–	–	–
16	73	80	87	97	112	150	170	210	235	–
20	97	97	97	107	121	166	204.5	244	279	343
25	102	102	108	118	128	168	207	246	281	345

1) At an operating pressure of 6 bar
2) Not available in sizes 6 and 8 with stroke 10 mm. For size 16 with stroke 80 ... 150 mm, the dimension is 14.5 mm
3) Max. screw-in depth

chanhvinh.com

Datasheet

Hole pattern for mounting threads and centring holes

Download CAD data ➔ www.festo.com

DGST-6-10

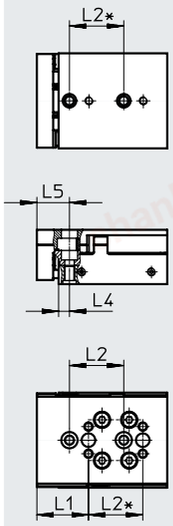

DGST-6-20

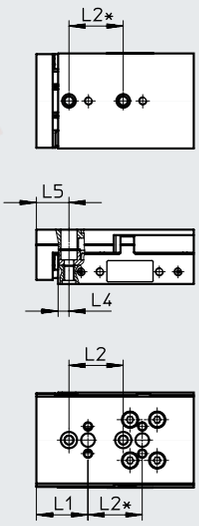

DGST-6-30

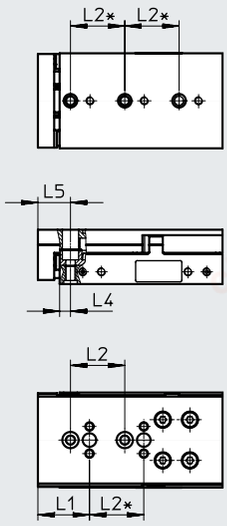

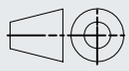

DGST-6-40

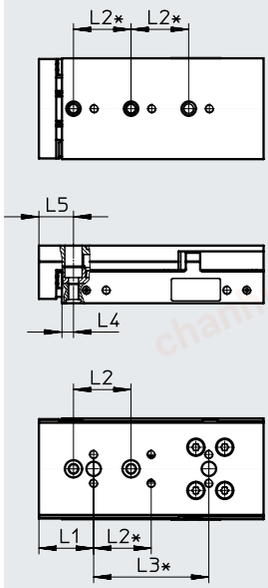

DGST-6-50

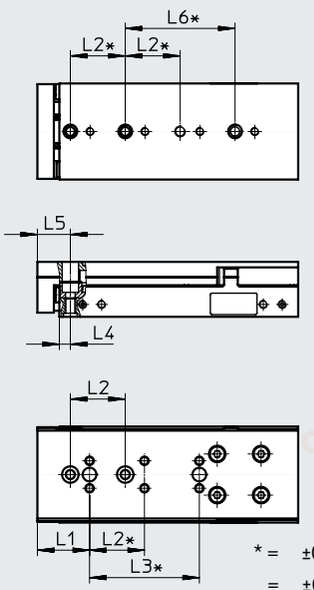

* = ±0.02 mm applies to the centring
= ±0.1 mm applies to the thread

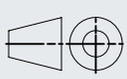

Size	Stroke [mm]	L1	L2	L3	L4	L5	L6
6	10	19	20	–	4	12	–
	20			–			–
	30			–			–
	40			40			–
	50			40			40

chanhvinh.com

Datasheet

Hole pattern for mounting threads and centring holes Download CAD data ➔ www.festo.com

DGST-8-10

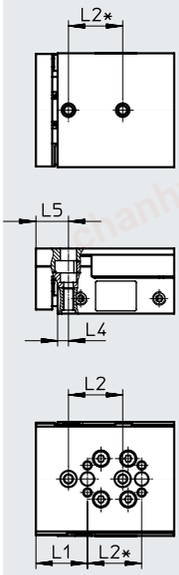

DGST-8-20

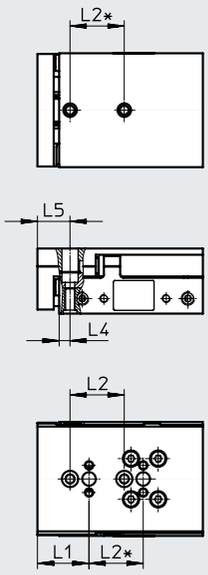

DGST-8-30

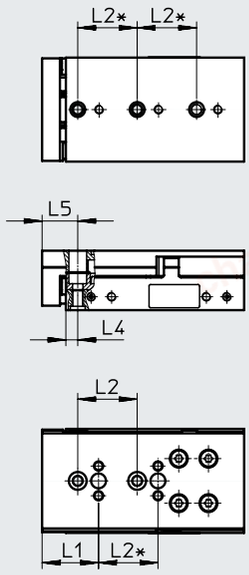

DGST-8-40

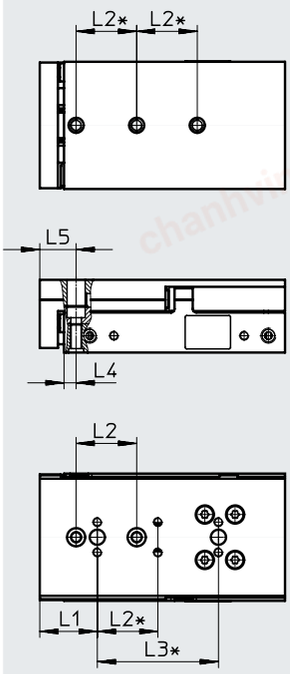

DGST-8-50

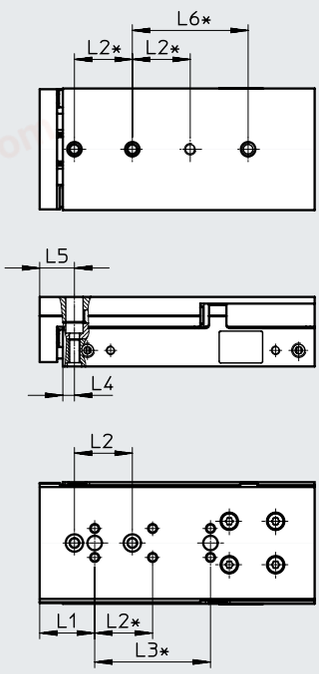

DGST-8-80

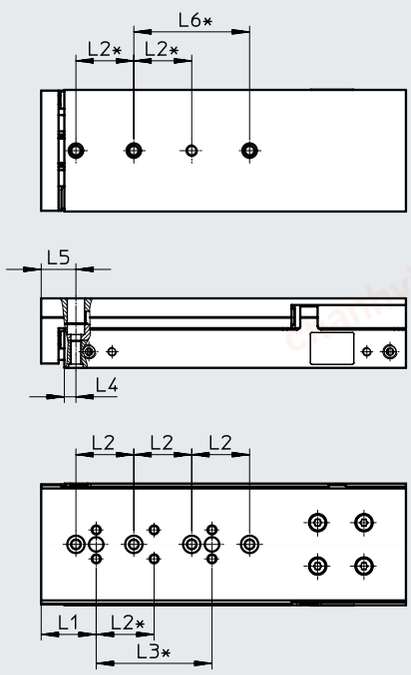

* = ±0.02 mm applies to the centring
= ±0.1 mm applies to the thread

Size	Stroke [mm]	L1	L2	L3	L4	L5	L6
8	10	19	20	–	4	12	–
	20			–			–
	30			–			–
	40			40			–
	50			40			40
	80			40			40

chanhvinh.com

Datasheet

Hole pattern for mounting threads and centring holes

Download CAD data ➔ www.festo.com

DGST-10-10/20

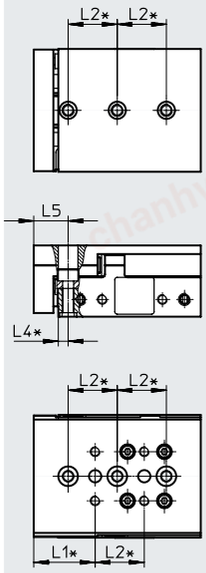

DGST-10-30

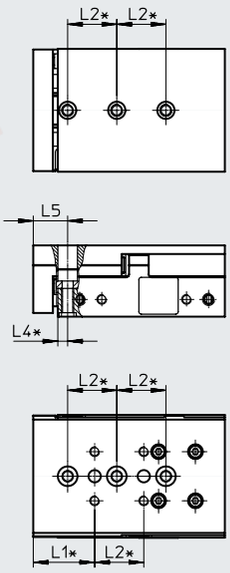

DGST-10-40

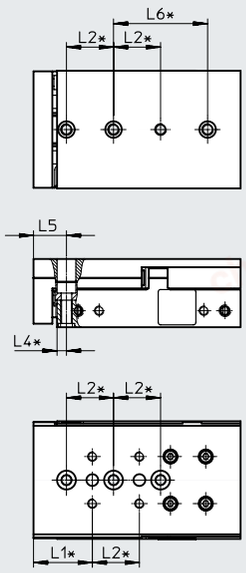

DGST-10-50

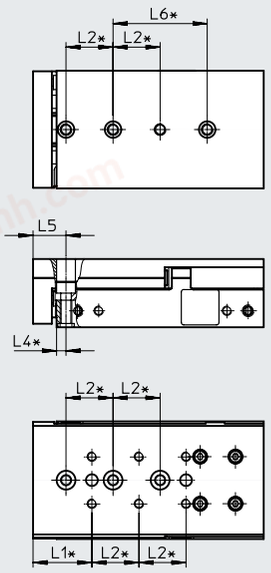

DGST-10-80

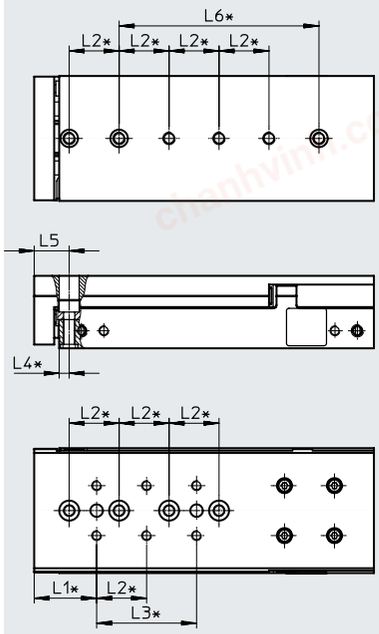

DGST-10-100

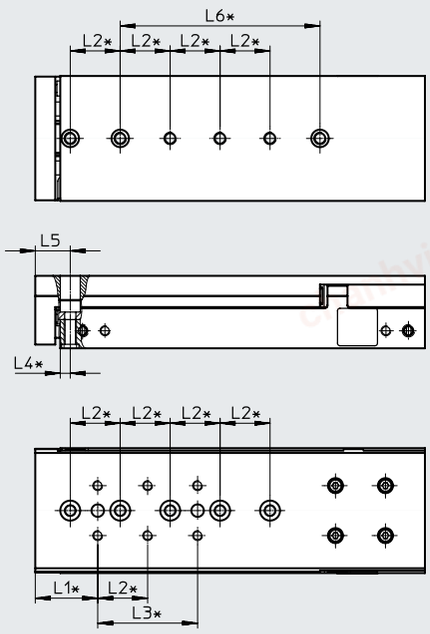

* = ±0.02 mm applies to the centring
= ±0.1 mm applies to the thread

Size	Stroke [mm]	L1	L2	L3	L4	L5	L6
10	10, 20	25	20	–	4	14	–
	30			–			–
	40, 50			–			40
	80			40			80
	100			40			80

chanhvinh.com

Datasheet

Hole pattern for mounting threads and centring holes

Download CAD data ➔ www.festo.com

DGST-12-10

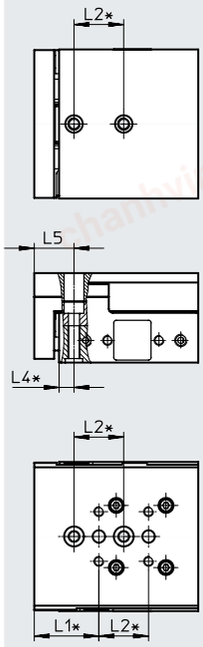

DGST-12-20

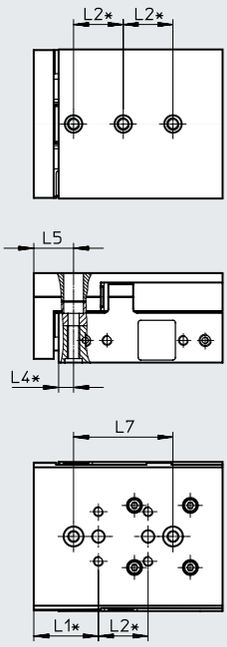

DGST-12-30

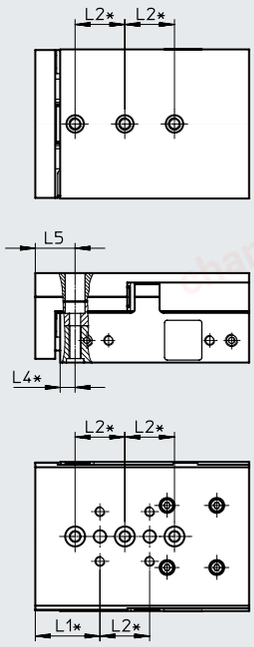

DGST-12-40

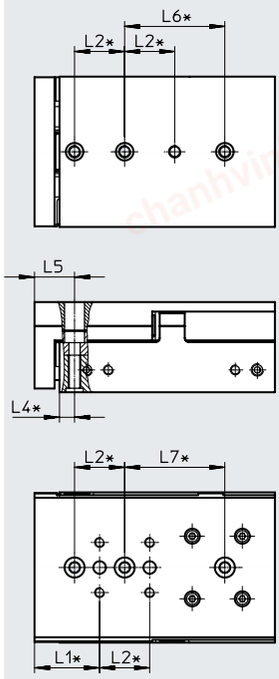

DGST-12-50/80

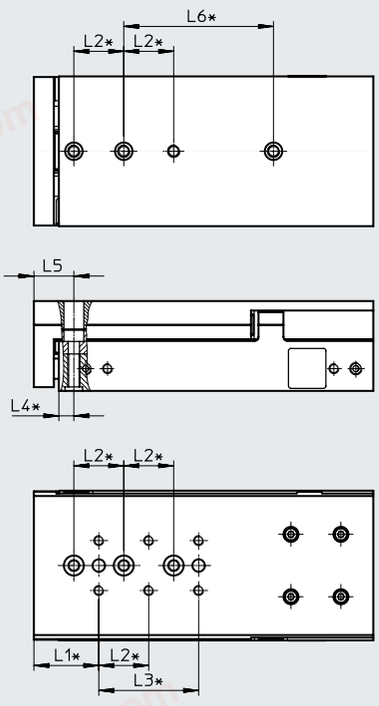

DGST-12-100

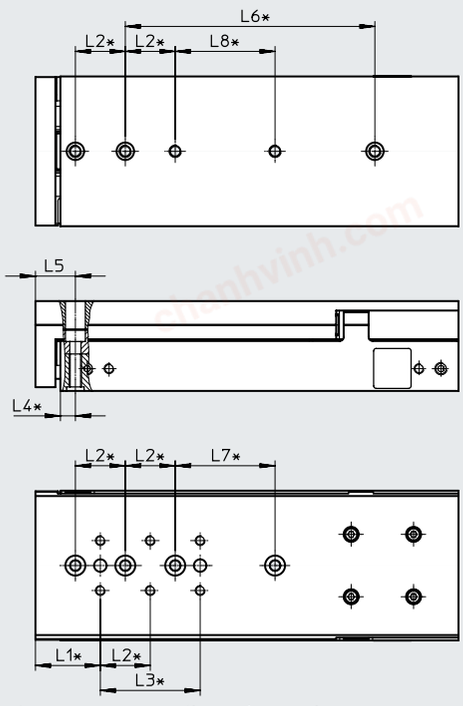

* = ±0.02 mm applies to the centring
= ±0.1 mm applies to the thread

Size	Stroke [mm]	L1	L2	L3	L4	L5	L6	L7	L8
12	10	26	20	–	6	16	–	–	–
	20			–			–	40	–
	30			–			–	–	–
	40			–			40	40	–
	50, 80			40			40, 60	–	–
	100			40			100	40	40

Datasheet

Hole pattern for mounting threads and centring holes

Download CAD data ➔ www.festo.com

DGST-16-10

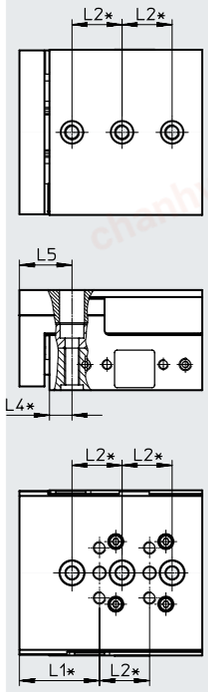

DGST-16-20/30

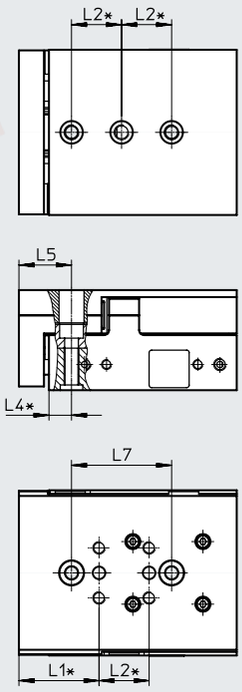

DGST-16-40

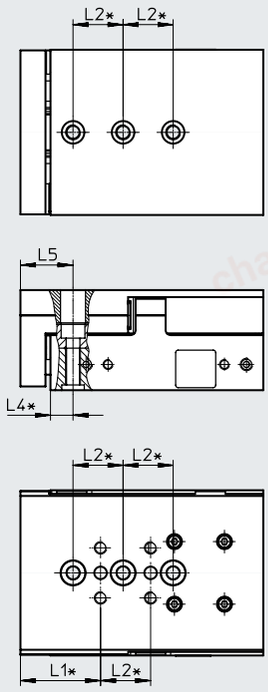

* = ±0.02 mm applies to the centring
= ±0.1 mm applies to the thread

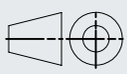

Size	Stroke [mm]	L1	L2	L4	L5	L7
16	10	32	20	9	21	–
	20					40
	30					40
	40					–

chanhvinh.com

Datasheet

Hole pattern for mounting threads and centring holes

Download CAD data ➔ www.festo.com

DGST-16-50

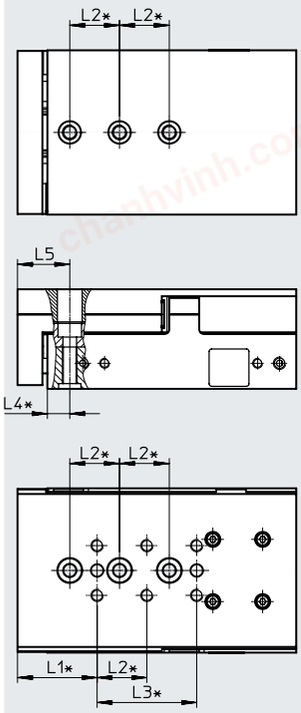

DGST-16-80

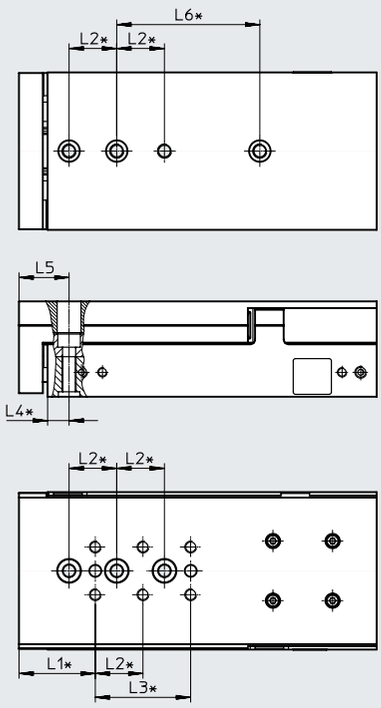

DGST-16-100

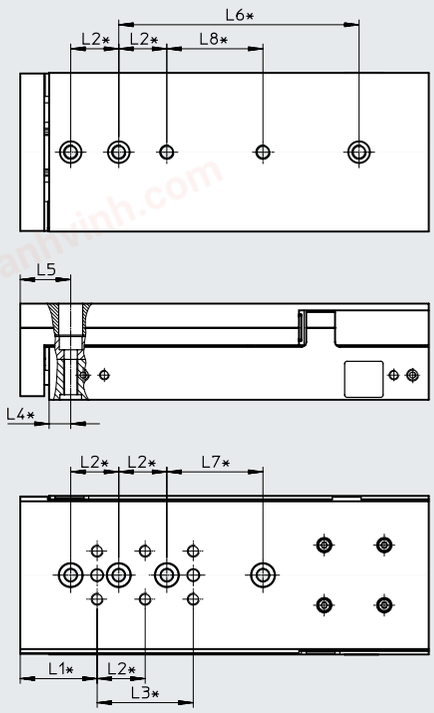

* = ±0.02 mm applies to the centring

= ±0.1 mm applies to the thread

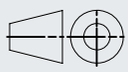

Size	Stroke [mm]	L1	L2	L3	L4	L5	L6	L7	L8
16	50	32	20	40	9	21	–	–	–
	80						60	–	–
	100						100	40	40

chanhvinh.com

Datasheet

Hole pattern for mounting threads and centring holes

Download CAD data ➔ www.festo.com

DGST-16-125

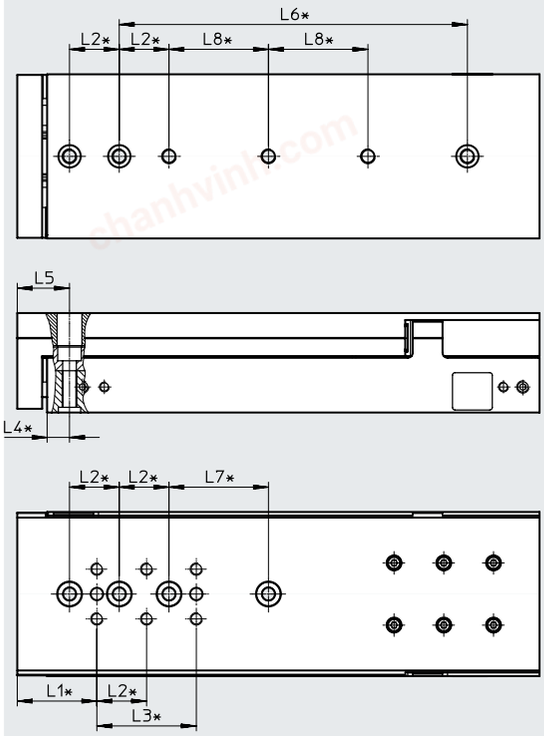

DGST-16-150

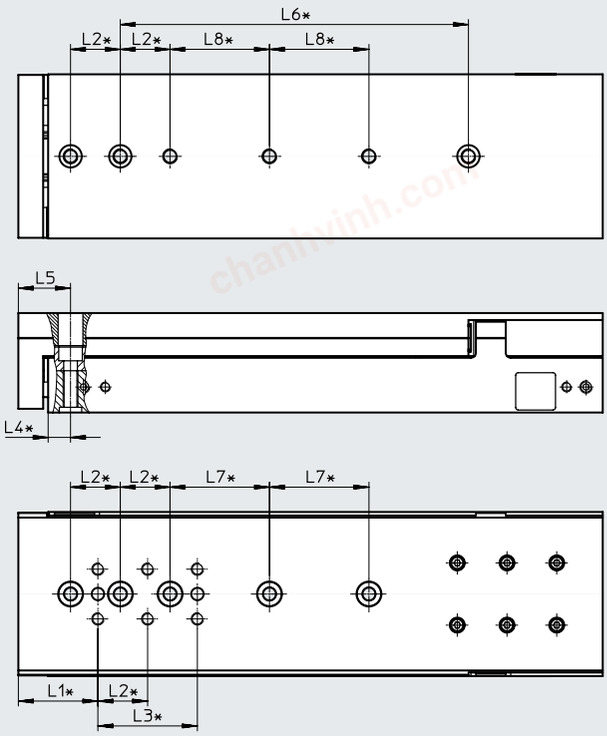

* = ±0.02 mm applies to the centring
= ±0.1 mm applies to the thread

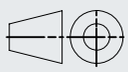

Size	Stroke [mm]	L1	L2	L3	L4	L5	L6	L7	L8
16	125 150	32	20	40	9	21	140	40	40

chanhvinh.com

Datasheet

Hole pattern for mounting threads and centring holes

Download CAD data ➔ www.festo.com

DGST-20-10/20/30/40

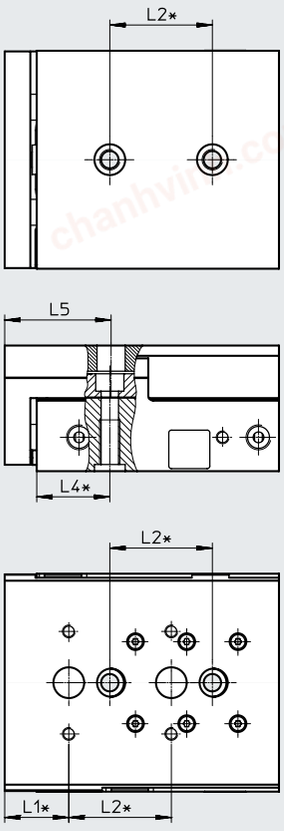

DGST-20-50

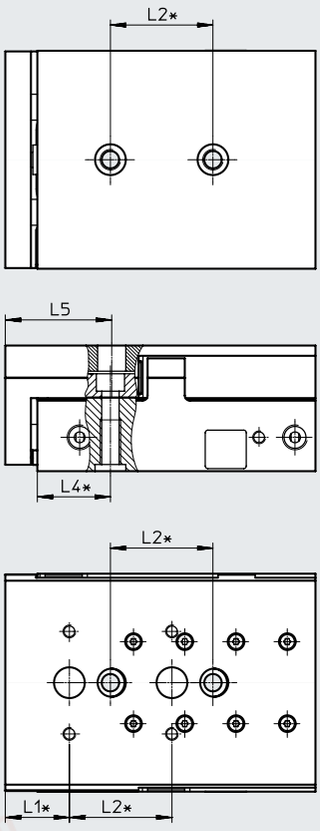

DGST-20-80

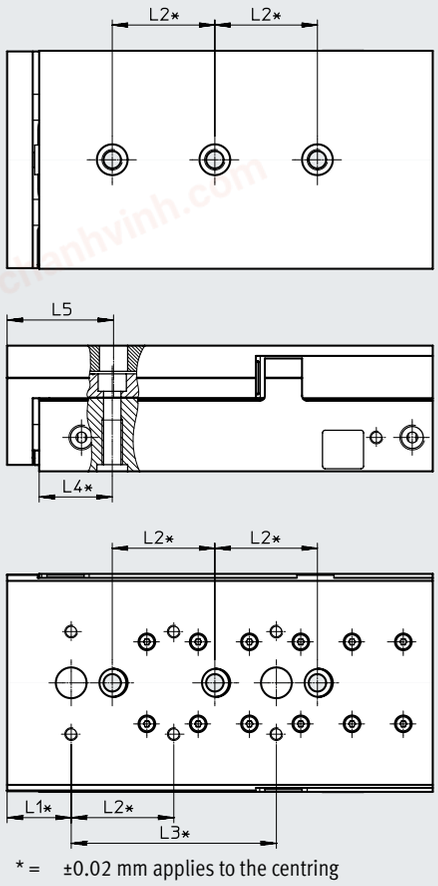

* = ±0.02 mm applies to the centring
= ±0.1 mm applies to the thread

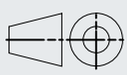

Size	Stroke [mm]	L1	L2	L3	L4	L5
20	10	25	40	–	28.5	41.5
	20			–		
	30			–		
	40			–		
	50			–		
	80			80		

chanhvinh.com

Datasheet

Hole pattern for mounting threads and centring holes

Download CAD data ➔ www.festo.com

DGST-20-100

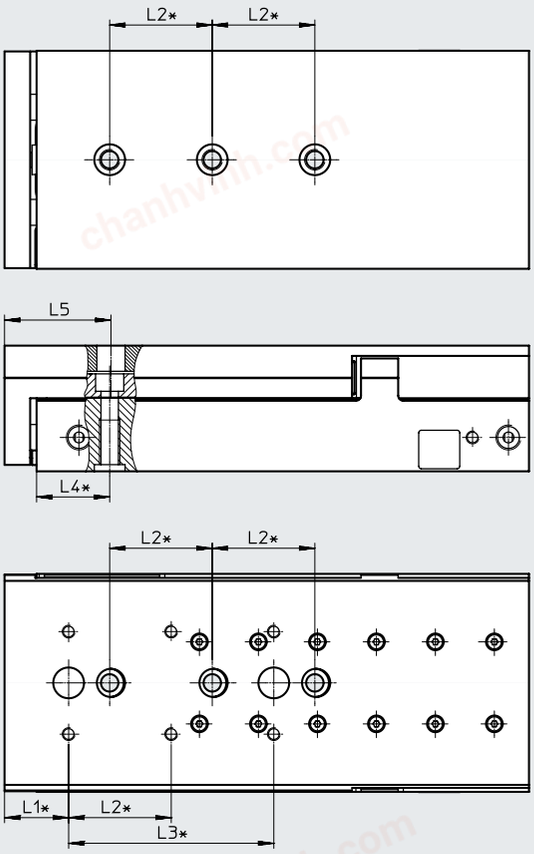

DGST-20-125

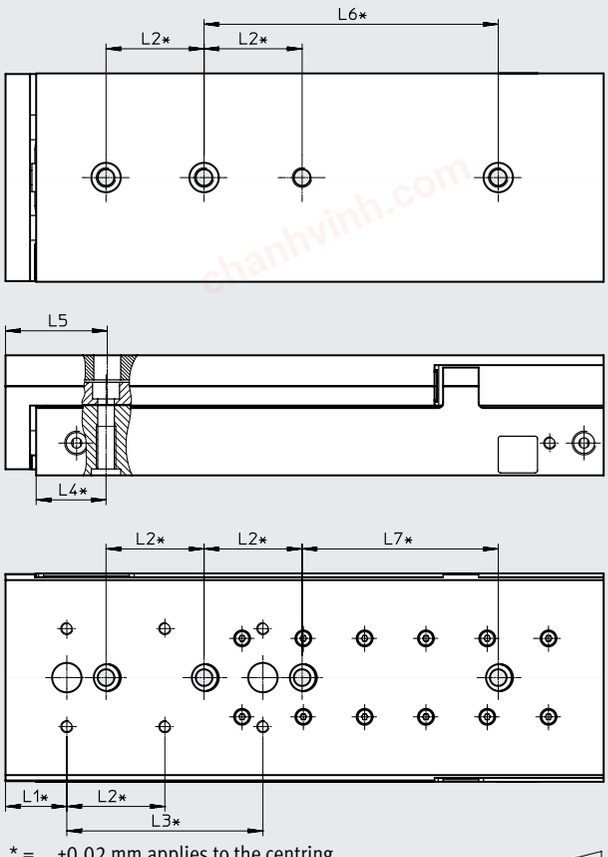

* = ±0.02 mm applies to the centring
= ±0.1 mm applies to the thread

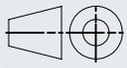

Size	Stroke [mm]	L1	L2	L3	L4	L5	L6	L7
20	100	25	40	80	28.5	41.5	–	80
	125						120	

chanhvinh.com

Datasheet

Hole pattern for mounting threads and centring holes Download CAD data ➔ www.festo.com

DGST-20-150

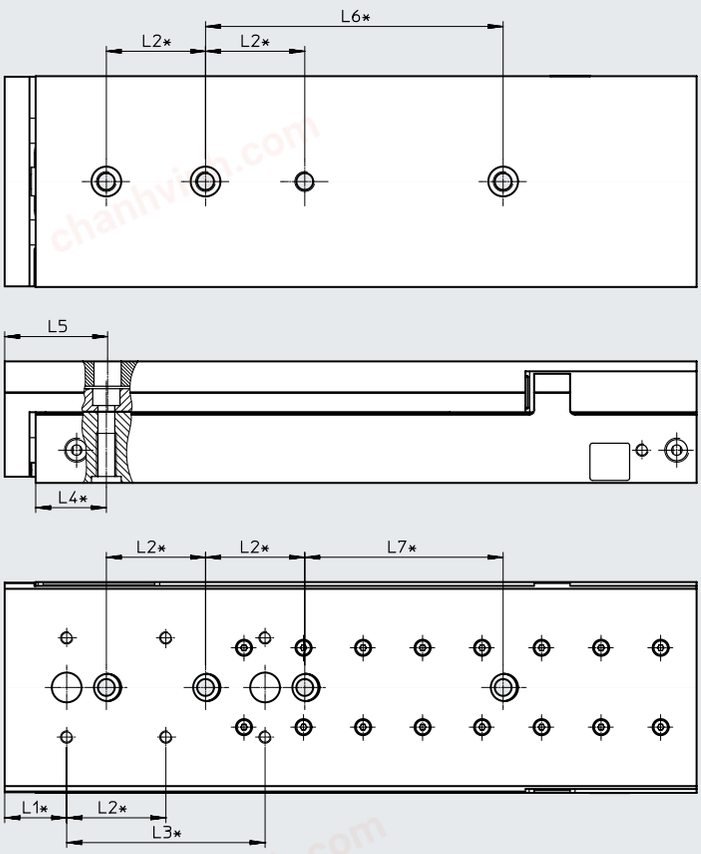

* = ±0.02 mm applies to the centring
= ±0.1 mm applies to the thread

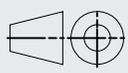

Size	Stroke [mm]	L1	L2	L3	L4	L5	L6	L7
20	150	25	40	80	28.5	41.5	120	80

chanhvinh.com

Datasheet

Hole pattern for mounting threads and centring holes Download CAD data ➔ www.festo.com

DGST-20-200

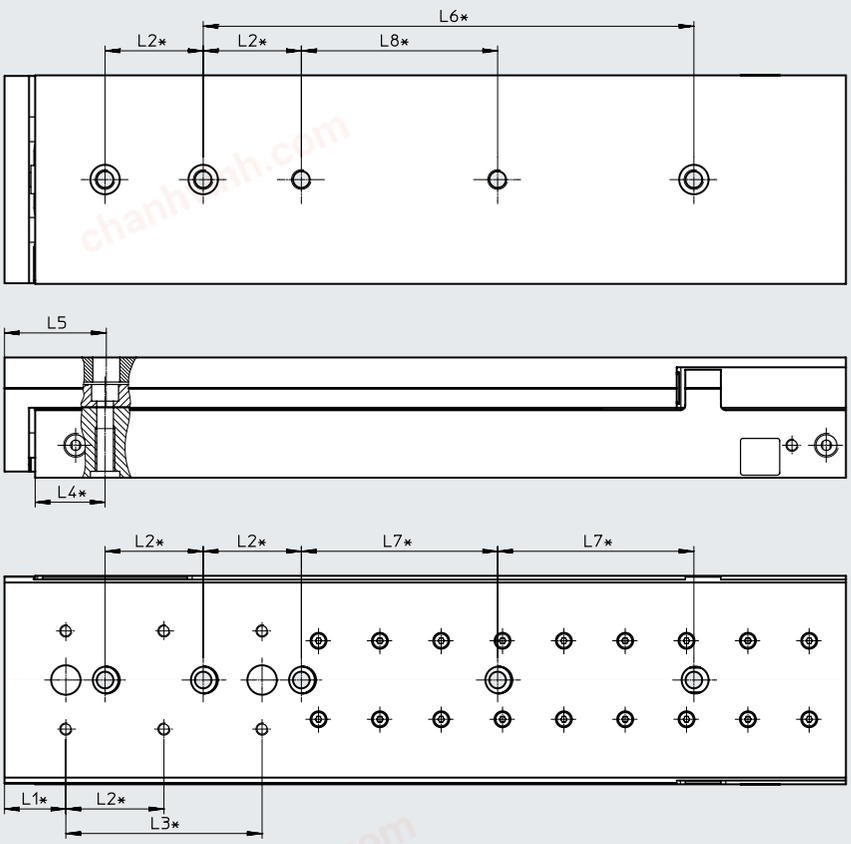

* = ±0.02 mm applies to the centring
= ±0.1 mm applies to the thread

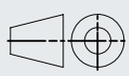

Size	Stroke [mm]	L1	L2	L3	L4	L5	L6	L7	L8
20	200	25	40	80	28.5	41.5	200	80	80

chanhvinh.com

Datasheet

Hole pattern for mounting threads and centring holes

Download CAD data ➔ www.festo.com

DGST-25-10/20/30/40

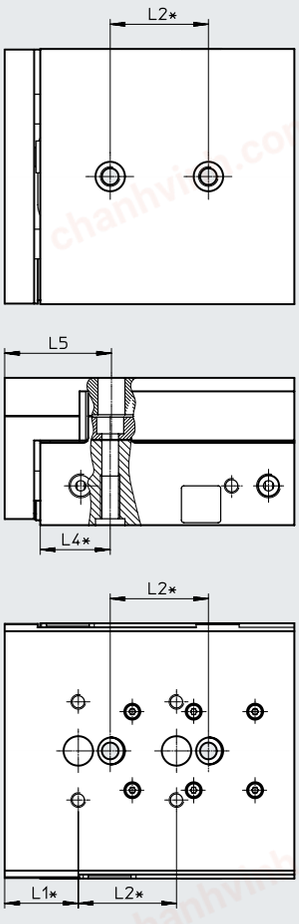

DGST-25-50

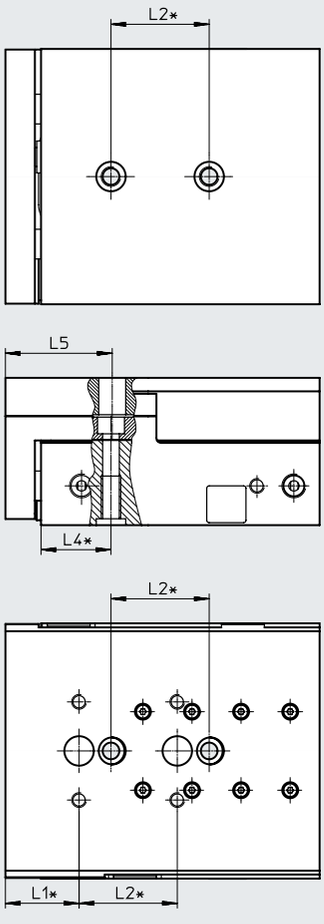

DGST-25-80

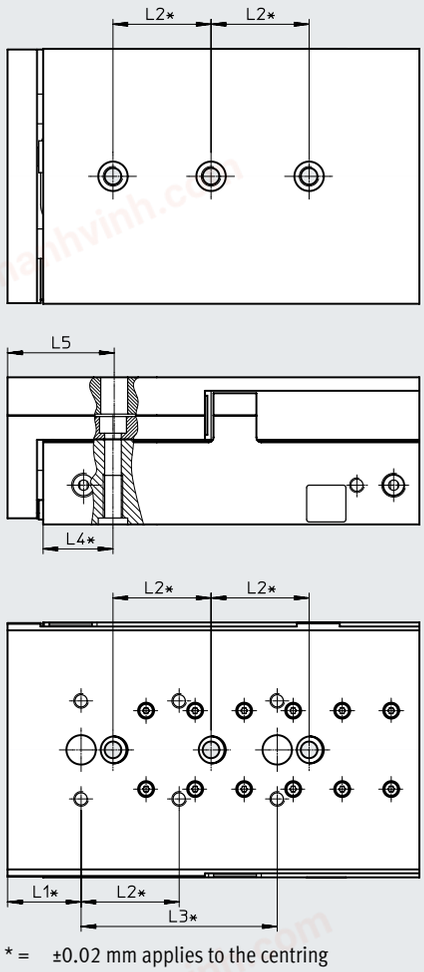

* = ±0.02 mm applies to the centring
= ±0.1 mm applies to the thread

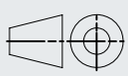

Size	Stroke [mm]	L1	L2	L3	L4	L5
25	10	30	40	–	28.5	43.5
	20			–		
	30			–		
	40			–		
	50			–		
	80			80		

chanhvinh.com

Datasheet

Hole pattern for mounting threads and centring holes Download CAD data ➔ www.festo.com

DGST-25-100

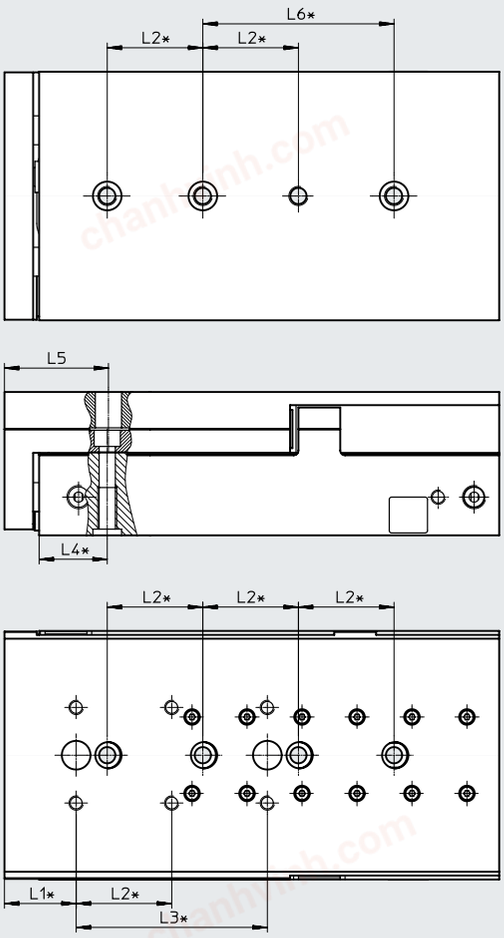

* = ±0.02 mm applies to the centring
= ±0.1 mm applies to the thread

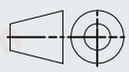

Size	Stroke [mm]	L1	L2	L3	L4	L5	L6	L7
25	100	30	40	80	28.5	43.5	80	80

chanhvinh.com

Datasheet

Hole pattern for mounting threads and centring holes Download CAD data ➔ www.festo.com

DGST-25-125

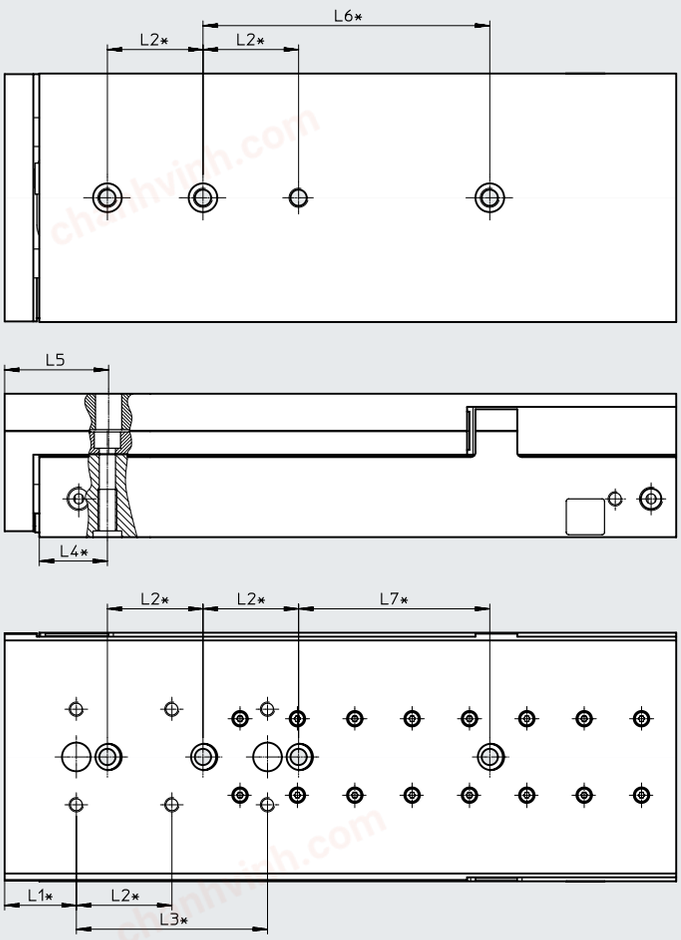

* = ±0.02 mm applies to the centring
= ±0.1 mm applies to the thread

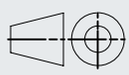

Size	Stroke [mm]	L1	L2	L3	L4	L5	L6	L7
25	125	30	40	80	28.5	43.5	120	80

chanhvinh.com

Datasheet

Hole pattern for mounting threads and centring holes Download CAD data ➔ www.festo.com

DGST-25-150

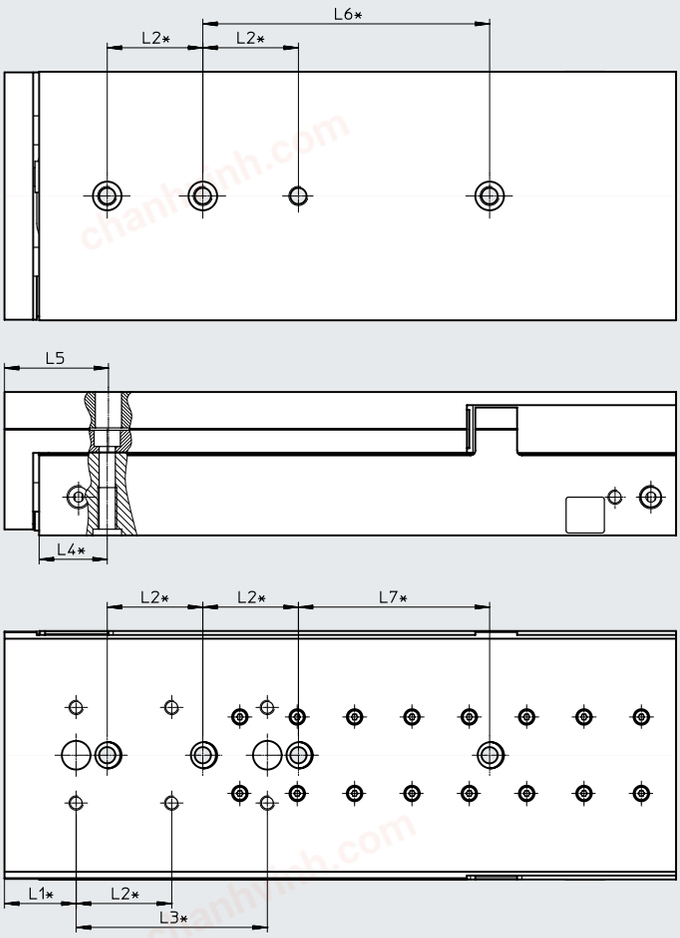

* = ±0.02 mm applies to the centring
= ±0.1 mm applies to the thread

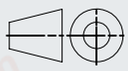

Size	Stroke [mm]	L1	L2	L3	L4	L5	L6	L7
25	150	30	40	80	28.5	43.5	120	80

chanhvinh.com

Datasheet

Hole pattern for mounting threads and centring holes

Download CAD data ➔ www.festo.com

DGST-25-200

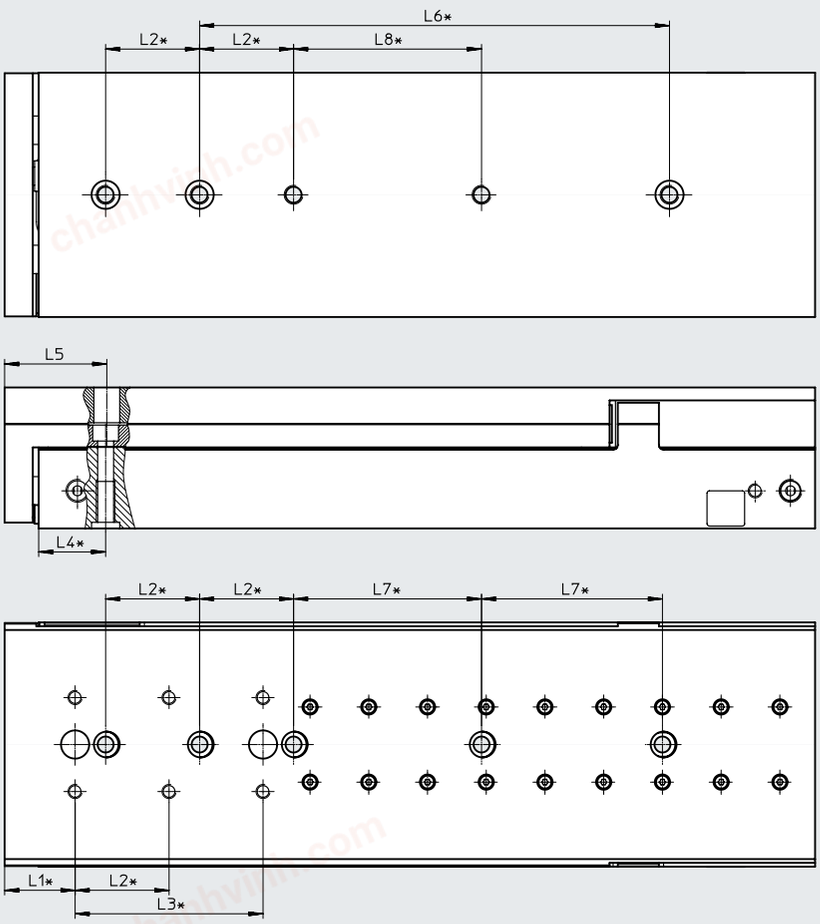

* = ±0.02 mm applies to the centring
= ±0.1 mm applies to the thread

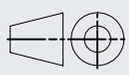

Size	Stroke [mm]	L1	L2	L3	L4	L5	L6	L7	L8
25	200	30	40	80	28.5	43.5	200	80	80

Datasheet

Dimensions Download CAD data ➔ www.festo.com

DGST-...-P: Setting dimension and projection in the end positions

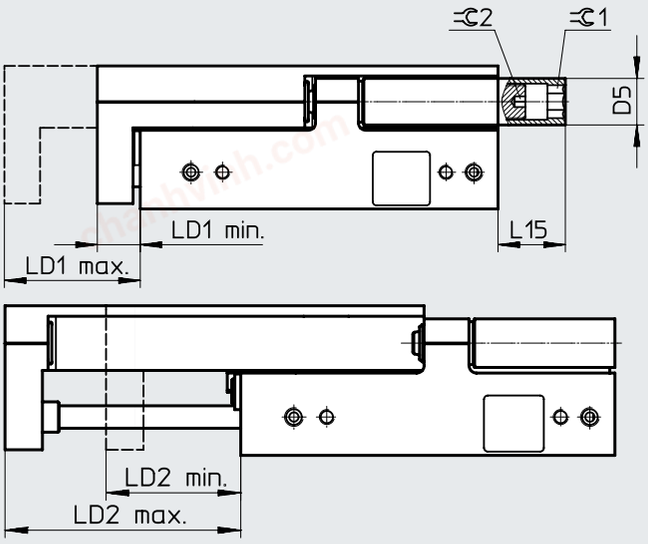

Note

Adjust and secure the cushioning components under pressure.

Size	Stroke [mm]	D5 ø	Retracted end position LD1			Advanced end position LD2			L15	⊂1	⊂2
			Setting range	min.	max.	Setting range	max.	min.			
6	10	6	10.4	8.6	19	10.4	19	8.6	6	3	1.5
	20		11.6		20.2	13.1	29	15.9			
	30						39	25.9			
	40						49	35.9			
	50						59	45.9	0		
8	10	7	10	9.1	19.1	10	19.1	9.1	14.8	4	1.5
	20		14.4		23.5	16.3	29.1	12.8			
	30						39.1	22.8			
	40						49.1	32.8			
	50						59.1	42.8	10.8		
	80						89.1	72.8	9.8		
10	10	8	10	11.1	21.1	10	21.1	11.1	6.4	5	2
	20		15.1		26.2	16.7	31.1	14.4	13.9		
	30						41.1	24.4			
	40						51.1	34.4			
	50						61.1	44.4			
	80						91.1	74.4	5.9		
	100						111.1	94.4			
12	10	10	10.1	10.9	21	10.1	21	10.9	15.4	6	2.5
	20		20.1		31	20.1	31	10.9			
	30		20.8		31.7	22.1	41	18.9			
	40						51	28.9			
	50						61	38.9			
	80						91	68.9			
	100						111	88.9	1.9		

chanhvinh.com

Datasheet

Size	Stroke [mm]	D5 ø	Retracted end position LD1			Advanced end position LD2			L15	⊂ 1	⊂ 2
			Setting range	min.	max.	Setting range	max.	min.			
16	10	13	10.3	12.7	23	10.3	23	12.7	17.85	8	3
	20		20.3		33	20.3	33	12.7	20.85		
	30		21.5		34.2	22.8	43	20.2	23.85		
	40						53	30.2			
	50						63	40.2	18.85		
	80						93	70.2	10.85		
	100						113	90.2			
	125						138	115.2	0		
	150						163	140.2			
20	10	15	10.1	13.1	23.2	10.1	23.2	13.1	11.5	10	4
	20		20.1		33.2	20.1	33.2	13.1	21.5		
	30		31.1		43.2	30.1	43.2	13.1	31.5		
	40				44.2	32.9	53.2	20.3			
	50						63.2	30.3	27.5		
	80						93.2	60.3	12.5		
	100						113.2	80.3	0		
	125						138.2	105.3			
	150						163.2	130.3			
	200						213.2	180.3			
25	10	18	10.2	15.3	25.5	10.2	25.5	15.3	28.5	10	4
	20		20.2		35.5	20.2	35.5	15.3	38.5		
	30		30.2		45.5	30.2	45.5	15.3	42.5		
	40		40.2		55.5	40.2	55.5	15.3			
	50		45.4		60.7	47	65.5	18.5			
	80						95.5	48.5	32.5		
	100						115.5	68.5	13.5		
	125						140.5	93.5	0		
	150						165.5	118.5			
	200						215.5	168.5			

chanhvinh.com

Datasheet

Dimensions Download CAD data ➔ www.festo.com

DGST-...-P1: Setting dimension and projection in the end positions

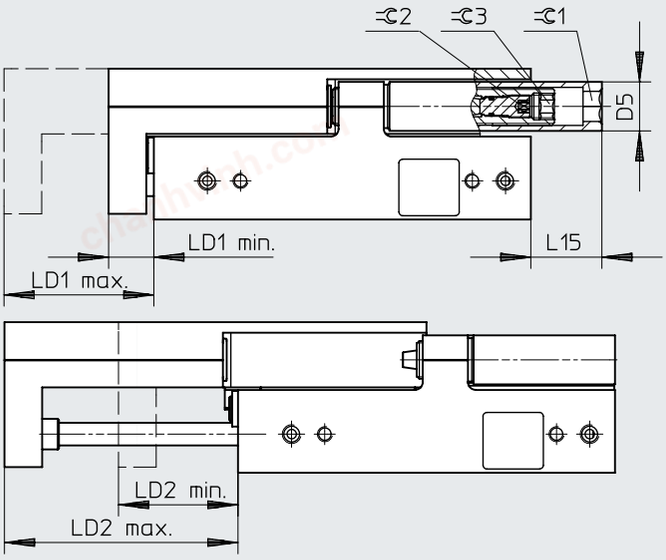

Note

Adjust and secure the cushioning components under pressure.

Size	Stroke [mm]	D5 ø	Retracted end position LD1			Advanced end position LD2			L15	⌀1	⌀2	⌀3
			Setting range	min.	max.	Setting range	max.	min.				
6	10	6	9.9	8.6	18.5	10.35	19	8.6	6	3	1.5	2.5
	20					11.45	29	17.5				
	30						39	27.5				
	40						49	37.5				
	50						59	47.5	0			
8	10	7	12.3	8.7	21	10.1	18.8	8.7	14.8	4	1.5	3
	20					13.5	28.8	15.3				
	30						38.8	25.3				
	40						48.8	35.3				
	50						58.8	45.3	10.8			
	80						88.8	75.3	9.8			
10	10	8	13.3	10.7	24	10.1	20.8	10.7	6.4	5	2	4
	20					14.4	30.8	16.4	14.4			
	30						40.8	26.4				
	40						50.8	36.4				
	50						60.8	46.4				
	80						90.8	76.4	6.4			
	100						110.8	96.4				
12	10	10	17.4	10.6	28	10.2	20.8	10.6	15.4	6	2.5	5
	20					18.4	30.8	12.4				
	30						40.8	22.4				
	40						50.8	32.4				
	50						60.8	42.4				
	80						90.8	72.4				
	100						110.8	92.4	1.9			

chanhvinh.com

Datasheet

Size	Stroke [mm]	D5 ø	Retracted end position LD1			Advanced end position LD2			L15	⊂ 1	⊂ 2	⊂ 3
			Setting range	min.	max.	Setting range	max.	min.				
16	10	13	16.4	12.6	29	10.15	22.8	12.6	17.9	8	3	6
	20					17.4	32.8	15.35	20.9			
	30						42.8	25.35	23.9			
	40						52.8	35.35				
	50						62.8	45.35	18.9			
	80						92.8	75.35	10.9			
	100						112.8	95.35				
	125						132.8	115.35	0			
	150						162.8	145.35				

chanhvinh.com

Datasheet

Dimensions Download CAD data ➔ www.festo.com

DGST-...-E: Setting dimension and projection in the end positions

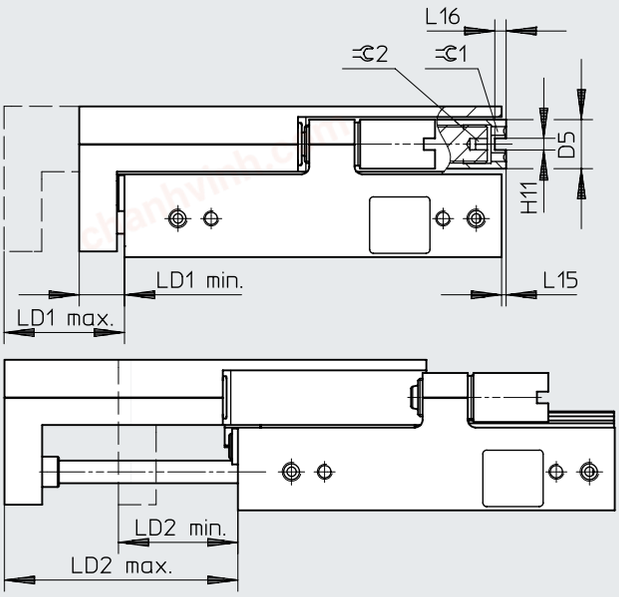

Note

Adjust and secure the cushioning components under pressure.

Size	Stroke [mm]	D5 Ø	H11	Retracted end position LD1			Advanced end position LD2			L15	L16	=C 1	=C 2
				Setting range	min.	max.	Setting range	max.	min.				
6	10	6	1.6	7	9	16	8.5	19.5	11	–	1.5	3	1.5
	20							29.5	21				
	30							39.5	31				
	40							49.5	41				
	50							59.5	51				
8	10	7	1.6	6.1	9.8	15.9	6.9	19.2	12.3	–	1.5	4	1.5
	20							29.2	22.3				
	30							39.2	32.3				
	40							49.2	42.3				
	50							59.2	52.3				
	80							89.2	82.3				
10	10	8	2.1	5.6	11.7	17.3	6.3	21.3	15	–	2	5	2
	20							31.3	25				
	30							41.3	35				
	40							51.3	45				
	50							61.3	55				
	80							91.3	85				
	100							111.3	105				
12	10	10	2.6	7.4	11.3	18.7	7.6	21.4	13.8	–	2.5	6	2.5
	20							31.4	23.8				
	30							41.4	33.8				
	40							51.4	43.8				
	50							61.4	53.8				
	80							91.4	83.8				
	100							111.4	103.8				

chanhvinh.com

Datasheet

Size	Stroke [mm]	D5 ø	H11	Retracted end position LD1			Advanced end position LD2			L15	L16	⊂ 1	⊂ 2
				Setting range	min.	max.	Setting range	max.	min.				
16	10	13	3.1	6.2	13	19.2	6.4	23.4	17	6.2	3	8	3
	20							33.4	27				
	30							43.4	37				
	40							53.4	47				
	50							63.4	57				
	80							93.4	87				
	100							113.4	107				
	125							138.4	132				
	150							163.4	157				
20	10	15	4.1	6.5	13.6	20.1	7	23.5	16.5	5.5	4	10	4
	20							33.5	26.5				
	30							43.5	36.5				
	40							53.5	46.5				
	50							63.5	56.5				
	80							93.5	86.5				
	100							113.5	106.5				
	125							138.5	131.5				
	150							163.5	156.5				
	200							213.5	206.5				
25	10	18	4.1	6	15.6	21.6	6.3	25.8	19.5	4.2	4	10	4
	20							35.8	29.5				
	30							45.8	39.5				
	40							55.8	49.5				
	50							65.8	59.5				
	80							95.8	89.5				
	100							115.8	109.5				
	125							140.8	134.5				
	150							165.8	159.5				
	200							215.8	209.5				

Datasheet

Dimensions Download CAD data ➔ www.festo.com

DGST-...-Y12: Setting dimension and projection in the end positions

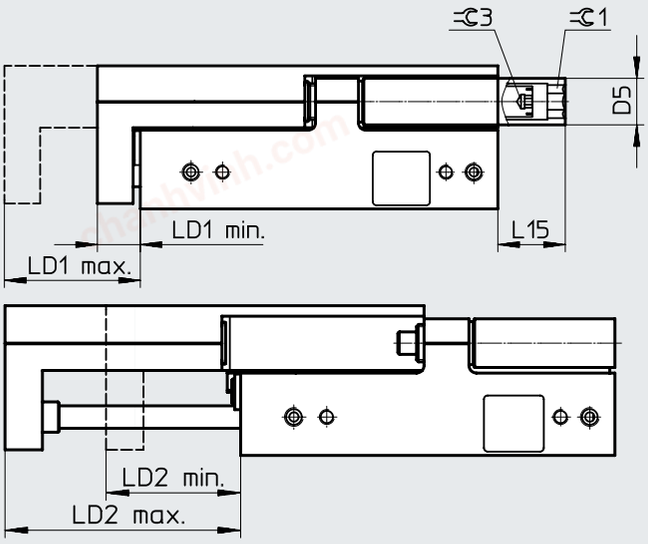

Note

Adjust and secure the cushioning components under pressure.

Size	Stroke [mm]	D5 ø	Retracted end position LD1			Advanced end position LD2			L15	⊂ 1	⊂ 3
			Setting range	min.	max.	Setting range	max.	min.			
6	30	6	9.6	8.6	18.2	11.2	39	27.8	6	3	–[1]
	40						49	37.8			
	50						59	47.8	0		
8	30	7	15.7	9.1	24.8	17.6	39.1	21.5	14.8	4	2
	40						49.1	31.5			
	50						59.1	41.5	10.8		
	80						89.1	71.5	9.8		
10	30	8	14.5	11.1	25.6	16.2	41.1	24.9	13.9	5	2
	40						51.1	34.9			
	50						61.1	44.9			
	80						91.1	74.9	5.9		
	100						111.1	94.9			
12	30	10	15.2	10.9	26.1	16.7	41	24.3	15.4	6	2.5
	40						51	34.3			
	50						61	44.3			
	80						91	74.3			
	100						111	94.3	1.9		

1) There is a slot in the shock absorber for screwing it in.

chanhvinh.com

Datasheet

Size	Stroke [mm]	D5 ø	Retracted end position LD1			Advanced end position LD2			L15	⊂ 1	⊂ 3
			Setting range	min.	max.	Setting range	max.	min.			
16	30	13	15.5	12.7	28.2	16.9	43	26.1	23.85	8	3
	40						53	36.1			
	50						63	46.1	18.85		
	80						93	76.1	10.85		
	100						113	96.1			
	125						138	121.1	0		
	150						163	146.1			
20	30	15	22.1	13.1	35.2	22.1	43.2	21.1	31.5	10	4
	40		25.9		39	27.7	53.2	25.5			
	50						63.2	35.5	27.5		
	80						93.2	65.5	12.5		
	100						113.2	85.5	0		
	125						138.2	110.5			
	150						163.2	135.5			
	200						213.2	185.5			
25	30	18	20.2	15.3	35.5	20.2	45.5	25.3	42.5	10	4
	40		30.2		45.5	30.2	55.5	25.3			
	50		30.4		45.7	32	65.5	33.5			
	80						95.5	63.5	32.5		
	100						115.5	83.5	13.5		
	125						140.5	108.5	0		
	150						165.5	133.5			
	200						215.5	183.5			

chanhvinh.com

Datasheet

Ordering data

Size	Stroke [mm]	Part no.	Type
With cushioning E1			
6	10	**8078828**	**DGST-6-10-E1A**
	20	**8078829**	**DGST-6-20-E1A**
	30	**8078830**	**DGST-6-30-E1A**
	40	**8078831**	**DGST-6-40-E1A**
	50	**8078832**	**DGST-6-50-E1A**
8	10	**8078833**	**DGST-8-10-E1A**
	20	**8078834**	**DGST-8-20-E1A**
	30	**8078835**	**DGST-8-30-E1A**
	40	**8078836**	**DGST-8-40-E1A**
	50	**8078837**	**DGST-8-50-E1A**
	80	**8078838**	**DGST-8-80-E1A**
10	10	**8078839**	**DGST-10-10-E1A**
	20	**8078840**	**DGST-10-20-E1A**
	30	**8078841**	**DGST-10-30-E1A**
	40	**8078842**	**DGST-10-40-E1A**
	50	**8078843**	**DGST-10-50-E1A**
	80	**8078844**	**DGST-10-80-E1A**
	100	**8078845**	**DGST-10-100-E1A**
12	10	**8078846**	**DGST-12-10-E1A**
	20	**8078847**	**DGST-12-20-E1A**
	30	**8078848**	**DGST-12-30-E1A**
	40	**8078849**	**DGST-12-40-E1A**
	50	**8078850**	**DGST-12-50-E1A**
	80	**8078851**	**DGST-12-80-E1A**
	100	**8078852**	**DGST-12-100-E1A**
16	10	**8078853**	**DGST-16-10-E1A**
	20	**8078854**	**DGST-16-20-E1A**
	30	**8078855**	**DGST-16-30-E1A**
	40	**8078856**	**DGST-16-40-E1A**
	50	**8078857**	**DGST-16-50-E1A**
	80	**8078858**	**DGST-16-80-E1A**
	100	**8078859**	**DGST-16-100-E1A**
	125	**8078860**	**DGST-16-125-E1A**
	150	**8078861**	**DGST-16-150-E1A**

Size	Stroke [mm]	Part no.	Type
With cushioning P			
6	10	**8085105**	**DGST-6-10-PA**
	20	**8085106**	**DGST-6-20-PA**
	30	**8085107**	**DGST-6-30-PA**
	40	**8085108**	**DGST-6-40-PA**
	50	**8085109**	**DGST-6-50-PA**
8	10	**8085110**	**DGST-8-10-PA**
	20	**8085111**	**DGST-8-20-PA**
	30	**8085112**	**DGST-8-30-PA**
	40	**8085113**	**DGST-8-40-PA**
	50	**8085114**	**DGST-8-50-PA**
	80	**8085115**	**DGST-8-80-PA**
10	10	**8085116**	**DGST-10-10-PA**
	20	**8085117**	**DGST-10-20-PA**
	30	**8085118**	**DGST-10-30-PA**
	40	**8085119**	**DGST-10-40-PA**
	50	**8085120**	**DGST-10-50-PA**
	80	**8085121**	**DGST-10-80-PA**
	100	**8085122**	**DGST-10-100-PA**
12	10	**8085123**	**DGST-12-10-PA**
	20	**8085124**	**DGST-12-20-PA**
	30	**8085125**	**DGST-12-30-PA**
	40	**8085126**	**DGST-12-40-PA**
	50	**8085127**	**DGST-12-50-PA**
	80	**8085128**	**DGST-12-80-PA**
	100	**8085129**	**DGST-12-100-PA**
16	10	**8085130**	**DGST-16-10-PA**
	20	**8085131**	**DGST-16-20-PA**
	30	**8085132**	**DGST-16-30-PA**
	40	**8085133**	**DGST-16-40-PA**
	50	**8085134**	**DGST-16-50-PA**
	80	**8085135**	**DGST-16-80-PA**
	100	**8085136**	**DGST-16-100-PA**
	125	**8085137**	**DGST-16-125-PA**
	150	**8085138**	**DGST-16-150-PA**

chanhvinh.com

chanhvinh.com

Datasheet

Ordering data

Size	Stroke [mm]	Part no.	Type
With cushioning E1			
20	10	**8078862**	**DGST-20-10-E1A**
	20	**8078863**	**DGST-20-20-E1A**
	30	**8078864**	**DGST-20-30-E1A**
	40	**8078865**	**DGST-20-40-E1A**
	50	**8078866**	**DGST-20-50-E1A**
	80	**8078867**	**DGST-20-80-E1A**
	100	**8078868**	**DGST-20-100-E1A**
	125	**8078869**	**DGST-20-125-E1A**
	150	**8078870**	**DGST-20-150-E1A**
	200	**8078871**	**DGST-20-200-E1A**
25	10	**8078872**	**DGST-25-10-E1A**
	20	**8078873**	**DGST-25-20-E1A**
	30	**8078874**	**DGST-25-30-E1A**
	40	**8078875**	**DGST-25-40-E1A**
	50	**8078876**	**DGST-25-50-E1A**
	80	**8078877**	**DGST-25-80-E1A**
	100	**8078878**	**DGST-25-100-E1A**
	125	**8078879**	**DGST-25-125-E1A**
	150	**8078880**	**DGST-25-150-E1A**
	200	**8078881**	**DGST-25-200-E1A**

Size	Stroke [mm]	Part no.	Type
With cushioning P			
20	10	**8085139**	**DGST-20-10-PA**
	20	**8085140**	**DGST-20-20-PA**
	30	**8085141**	**DGST-20-30-PA**
	40	**8085142**	**DGST-20-40-PA**
	50	**8085143**	**DGST-20-50-PA**
	80	**8085144**	**DGST-20-80-PA**
	100	**8085145**	**DGST-20-100-PA**
	125	**8085146**	**DGST-20-125-PA**
	150	**8085147**	**DGST-20-150-PA**
	200	**8085148**	**DGST-20-200-PA**
25	10	**8085149**	**DGST-25-10-PA**
	20	**8085150**	**DGST-25-20-PA**
	30	**8085151**	**DGST-25-30-PA**
	40	**8085152**	**DGST-25-40-PA**
	50	**8085153**	**DGST-25-50-PA**
	80	**8085154**	**DGST-25-80-PA**
	100	**8085155**	**DGST-25-100-PA**
	125	**8085156**	**DGST-25-125-PA**
	150	**8085157**	**DGST-25-150-PA**
	200	**8085158**	**DGST-25-200-PA**

chanhvinh.com

chanhvinh.com

Datasheet

Ordering data

Size	Stroke [mm]	Part no.	Type
With cushioning Y12			
6	30	**8085159**	**DGST-6-30-Y12A**
	40	**8085160**	**DGST-6-40-Y12A**
	50	**8085161**	**DGST-6-50-Y12A**
8	30	**8085162**	**DGST-8-30-Y12A**
	40	**8085163**	**DGST-8-40-Y12A**
	50	**8085164**	**DGST-8-50-Y12A**
	80	**8085165**	**DGST-8-80-Y12A**
10	30	**8085166**	**DGST-10-30-Y12A**
	40	**8085167**	**DGST-10-40-Y12A**
	50	**8085168**	**DGST-10-50-Y12A**
	80	**8085169**	**DGST-10-80-Y12A**
	100	**8085170**	**DGST-10-100-Y12A**
12	30	**8085171**	**DGST-12-30-Y12A**
	40	**8085172**	**DGST-12-40-Y12A**
	50	**8085173**	**DGST-12-50-Y12A**
	80	**8085174**	**DGST-12-80-Y12A**
	100	**8085175**	**DGST-12-100-Y12A**
16	30	**8085176**	**DGST-16-30-Y12A**
	40	**8085177**	**DGST-16-40-Y12A**
	50	**8085178**	**DGST-16-50-Y12A**
	80	**8085179**	**DGST-16-80-Y12A**
	100	**8085180**	**DGST-16-100-Y12A**
	125	**8085181**	**DGST-16-125-Y12A**
	150	**8085182**	**DGST-16-150-Y12A**
20	30	**8085183**	**DGST-20-30-Y12A**
	40	**8085184**	**DGST-20-40-Y12A**
	50	**8085185**	**DGST-20-50-Y12A**
	80	**8085186**	**DGST-20-80-Y12A**
	100	**8085187**	**DGST-20-100-Y12A**
	125	**8085188**	**DGST-20-125-Y12A**
	150	**8085189**	**DGST-20-150-Y12A**
	200	**8085190**	**DGST-20-200-Y12A**
25	30	**8085191**	**DGST-25-30-Y12A**
	40	**8085192**	**DGST-25-40-Y12A**
	50	**8085193**	**DGST-25-50-Y12A**
	80	**8085194**	**DGST-25-80-Y12A**
	100	**8085195**	**DGST-25-100-Y12A**
	125	**8085196**	**DGST-25-125-Y12A**
	150	**8085197**	**DGST-25-150-Y12A**
	200	**8085198**	**DGST-25-200-Y12A**

chanhvinh.com

Ordering data – Modular product system

Ordering table

Size	6	8	10	12	16	20	25	Conditions	Code		Enter code
Module no.	8073891	8073892	8073893	8073894	8073895	8073896	8073897				
Function	Mini slide								**DGST**		DGST
Size [mm]	6	8	10	12	16	20	25		**-...**		
Stroke [mm]	10	10	10	10	10	10	10		**-...**		
	20	20	20	20	20	20	20		**-...**		
	30	30	30	30	30	30	30		**-...**		
	40	40	40	40	40	40	40		**-...**		
	50	50	50	50	50	50	50		**-...**		
	–	80	80	80	80	80	80		**-...**		
	–	–	100	100	100	100	100		**-...**		
	–	–	–	–	125	125	125		**-...**		
	–	–	–	–	150	150	150		**-...**		
	–	–	–	–	–	200	200		**-...**		
Version	Standard										
	Mirror-inverted								**-L**		
Cushioning	Elastomer cushioning, short, at both ends								**-E**		
	Elastic cushioning rings/plates at both ends								**-P**		
	Elastomer cushioning, at both ends, stroke not adjustable								**-E1**		
	Elastomer cushioning, adjustable at both ends, with fixed stop					–	–		**-P1**		
	Shock absorber, self-adjusting, linear, at both ends, external							[1]	**-Y12**		
Position sensing	Via proximity switch								**A**		
Special material properties	None										
	Recommended for production systems for manufacturing lithium-ion batteries							[2]	**-F1A**		
Lubrication	Standard										
	Lubrication approved for use in food applications							[3]	**-H1**		

1) Y12 Only in combination with a stroke of min. 30 mm
2) F1A Not in combination with E, P1, H1
3) H1 Not in combination with Y12

chanhvinh.com

Accessories

Connection set DADG-AK-G8-...

Material:
Adapter: Epoxy resin
Seals: NBR
Screws: Coated steel

– ⫴ – Note:
Connection kit DADG-AK-G8-... cannot be used in combination with DGST-...-L-... (mirror-inverted)

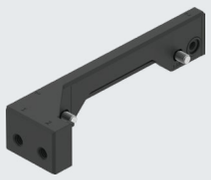

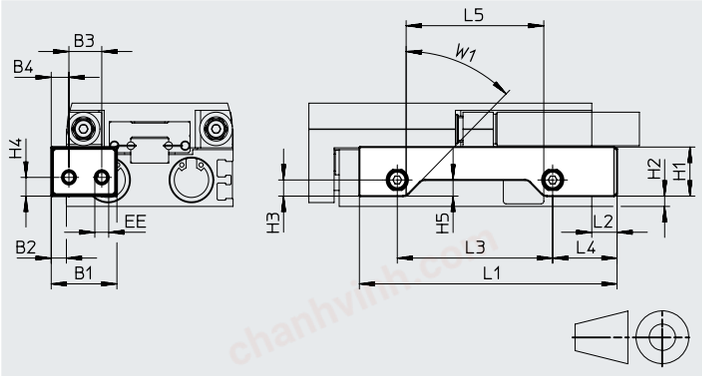

Dimensions and ordering data

For size [mm]	Stroke [mm]	B1	B2	B3	B4	EE	H1	H2	H3	H4	H5
6	20 ... 50	21	4	10.5	5.5	M5	11.6	0.1	4.4	5	2.9
8	20	26	6	13	6.5	M5	13.6	0.3	5.3	5.2	3.3
	30 ... 80										5.3
10	10 ... 20	26	6	13	6.5	M5	16.1	0.7	6.4	6.4	3.9
	30 ... 100										6.4
12	10	26	6	13	6.5	M5	18.4	2.6	6.4	6.4	3.9
	20 ... 100										6.4

For size [mm]	Stroke [mm]	L1	L2	L3	L4	L5	W1	CRC[1]	Weight [g]	Part no.	Type
6	20	53.5	8	21.9	20.7	17	45°	1	4.7	**8152357**	**DADG-AK-G8-6-20**
	30	63.5		31.9		27		1	5.1	**8152358**	**DADG-AK-G8-6-30**
	40	73.5		41.9		37		1	5.4	**8152359**	**DADG-AK-G8-6-40**
	50	90.5		58.9		54		1	6	**8152360**	**DADG-AK-G8-6-50**
8	20	61	10	23	23.5	17.4		1	8.3	**8152361**	**DADG-AK-G8-8-20**
	30	71		33		27.4		1	8.7	**8152362**	**DADG-AK-G8-8-30**
	40	81		43		37.4		1	9.2	**8152363**	**DADG-AK-G8-8-40**
	50	95		57		51.4		1	9.9	**8152364**	**DADG-AK-G8-8-50**
	80	126		88		82.4		1	11.3	**8152365**	**DADG-AK-G8-8-80**
10	10	64	10	22.5	25.6	16.7		1	11	**8152366**	**DADG-AK-G8-10-10**
	20	66		24.5		18.7		1	11.2	**8152367**	**DADG-AK-G8-10-20**
	30	76		34.5		28.7		1	11.6	**8152368**	**DADG-AK-G8-10-30**
	40	86		44.5		38.7		1	12.1	**8152369**	**DADG-AK-G8-10-40**
	50	96		54.5		48.7		1	12.6	**8152370**	**DADG-AK-G8-10-50**
	80	134		92.5		86.7		1	14.5	**8152371**	**DADG-AK-G8-10-80**
	100	154		112.5		106.7		1	15.5	**8152372**	**DADG-AK-G8-10-100**
12	10	62	10	20.7	25.8	14.9		1	12.2	**8152373**	**DADG-AK-G8-12-10**
	20	72		30.7		24.9		1	12.9	**8152374**	**DADG-AK-G8-12-20**
	30	82		40.7		34.9		1	13.6	**8152375**	**DADG-AK-G8-12-30**
	40	92		50.7		44.9		1	14.2	**8152376**	**DADG-AK-G8-12-40**
	50	102		60.7		54.9		1	14.9	**8152377**	**DADG-AK-G8-12-50**
	80	132		90.7		84.9		1	16.9	**8152378**	**DADG-AK-G8-12-80**
	100	165.5		124.2		118.4		1	19.2	**8152379**	**DADG-AK-G8-12-100**

1) More information: www.festo.com/x/topic/crc

chanhvinh.com

Accessories

Dimensions and ordering data

For size [mm]	Stroke [mm]	B1	B2	B3	B4	EE	H1	H2	H3	H4	H5
16	10 ... 20	26	6	13	7	M5	19	4	6.3	7.3	3.6
	30 ... 100										6.3
	125 ... 150										2
20	10 ... 30	45	9	22	13	G1/8	24.8	3.7	9.5	9.5	5.5
	40 ... 150										9.5
	200		10								8.6
25	10 ... 30	45	9	22	13	G1/8	28.2	6.5	9.5	9.5	5
	40 ... 150										9.5
	200		10								12

Size [mm]	Stroke [mm]	L1	L2	L3	L4	L5	W1	CRC[1]	Weight [g]	Part no.	Type
16	10	63	10	22.5	25.5	15.5	45°	1	12.9	**8152380**	**DADG-AK-G8-16-10**
	20	70		29.5		22.5		1	13.5	**8152381**	**DADG-AK-G8-16-20**
	30	77		36.5		29.5		1	13.8	**8152382**	**DADG-AK-G8-16-30**
	40	87		46.5		39.5		1	14.5	**8152383**	**DADG-AK-G8-16-40**
	50	102		61.5		54.5		1	15.5	**8152384**	**DADG-AK-G8-16-50**
	80	140		100.5	24.5	93.5		1	17.8	**8152385**	**DADG-AK-G8-16-80**
	100	160		120.5		113.5		1	19.1	**8152386**	**DADG-AK-G8-16-100**
	125	200		160.5		153.5		1	28.2	**8159793**	**DADG-AK-G8-16-125**
	150	225		185.5		178.5		1	31	**8159794**	**DADG-AK-G8-16-150**
20	10/20/30	92.6	15	32	37	23.4		1	36.3	**8152389**	**DADG-AK-G8-20-10/30**
	40	102.6		42		33.4		1	37.5	**8152390**	**DADG-AK-G8-20-40**
	50	116.6		56		47.4		1	39.2	**8152391**	**DADG-AK-G8-20-50**
	80	161.6		101		92.4		1	44.7	**8152392**	**DADG-AK-G8-20-80**
	100	200.1		139.5		130.9		1	49.4	**8159795**	**DADG-AK-G8-20-100**
	125	239.6		179		170.4		1	54.2	**8159796**	**DADG-AK-G8-20-125**
	150	274.6		214		205.4		1	58.6	**8159797**	**DADG-AK-G8-20-150**
	200	338.6		278		270.1		1	80.2	**8159882**	**DADG-AK-G8-20-200**
25	10/20	95.6	15	30.5	40.5	22.6		1	43.7	**8152397**	**DADG-AK-G8-25-10/20**
	30	101.6		36.5		28.6		1	44.8	**8152398**	**DADG-AK-G8-25-30**
	40	111.6		46.5		38.6		1	46.1	**8152399**	**DADG-AK-G8-25-40**
	50	121.6		56.5		48.6		1	47.5	**8152400**	**DADG-AK-G8-25-50**
	80	161.6		96.5		88.6		1	53.4	**8152401**	**DADG-AK-G8-25-80**
	100	200.6		135.5		127.6		1	59	**8159816**	**DADG-AK-G8-25-100**
	125	239.6		174.5		166.6		1	64.7	**8159817**	**DADG-AK-G8-25-125**
	150	274.6		209.5		201.6		1	69.8	**8159818**	**DADG-AK-G8-25-150**
	200	338.6		273.5		265.5		1	87.7	**8159883**	**DADG-AK-G8-25-200**

1) More information: www.festo.com/x/topic/crc

chanhvinh.com

Accessories

Intermediate-position module DADM

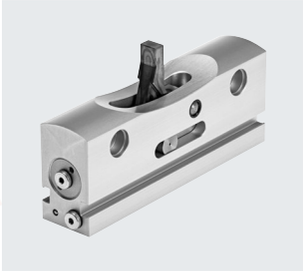

Material:
Housing:
Wrought aluminium alloy
Lever:
High-alloy stainless steel
RoHS-compliant

Dimensions and ordering data Datasheets → Internet: dadm

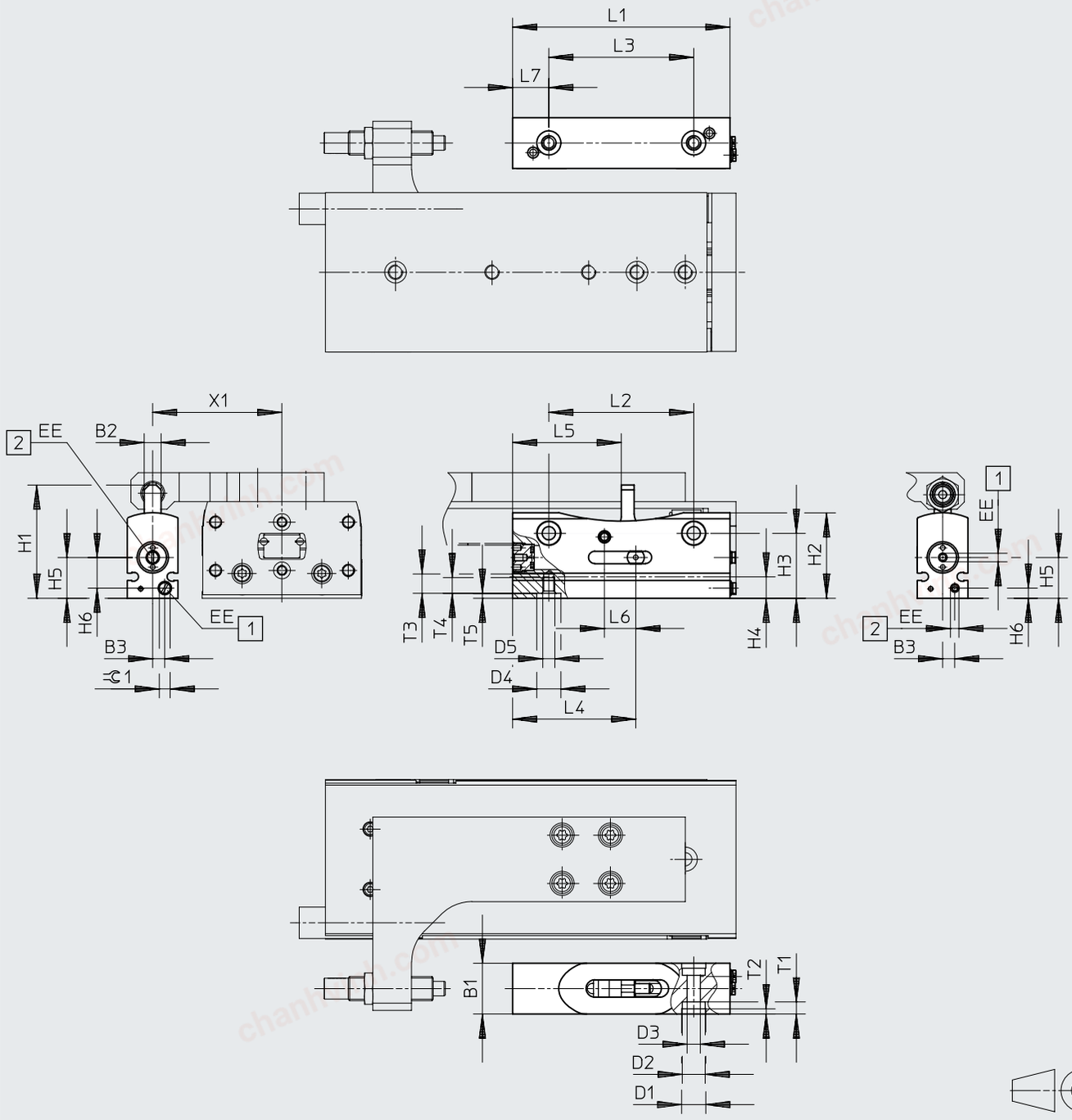

[1] Swivel stop lever inwards
[2] Swivel stop lever outwards

Note

With DADM-EP-G6-10: SME/SMT-10
With DADM-EP-G6-16: SME/SMT-8

chanhvinh.com

Accessories

For size	B1	B2	B3	D1 ⌀ H7	D2 ⌀	D3 ⌀	D4 ⌀ H7	D5	EE	H1	H2
12, 16	21	7	5	10	9.5	5.5	10	M5	M3	46.9	35.4
20, 25	26.5	9	5.5	12	11	6.6	12	M6	M5	65.2	47.4

For size	H3 ±0.1	H4	H5 ±0.1	H6 ±0.1	L1	L2 ±0.05	L3 ±0.05	L4	L5	L6	L7
12, 16	26.9	8.9	16.9	12.7	90	60	60	51	45	12	15
20, 25	36.4	12.4	23.4	17	120	80	80	68	60	16	20

For size	T1	T2 ±0.05	T3	T4	T5 ±0.05	X1 +0.2	=⊂1	Weight [g]	Part no.	Type
12	5	2.15	8	6.5	2.15	50.5	4.5	154	**1492072**	**DADM-EP-G6-10**
16						53.5				
20	6.8	2.65	10	8	2.65	70.8	2.5	340	**1478121**	**DADM-EP-G6-16**
25						80.3				

Ordering data

	For size	Description	Part no.	Type	PU[1]
Connector sleeve ZBV				Datasheets → Internet: zbv	
	12, 16	For centring the intermediate-position module (2 pieces included in the scope of delivery for the intermediate-position module)	**560254**	**ZBV-10-9**	10
Centring sleeve ZBH				Datasheets → Internet: zbh	
	20, 25	For centring the intermediate-position module (2 pieces included in the scope of delivery for the intermediate-position module)	**8137185**	**ZBH-12-B**	10

1) Packaging unit

Assembly

To ensure that the shock absorber hits the middle of the stop lever, the following spacing must be complied with:
DGST-12/16: 10 mm
DGST-20/25: 15 mm
It is fastened on the mounting surface using 2 screws and centring sleeves.
The shock absorber retainer is then attached to the slide of the mini slide using 4 screws and 2 centring sleeves.

Precision adjustment:
The position can be precisely adjusted via the screw-in depth of the shock absorber. The shock absorber must protrude by at least 1.5 mm.

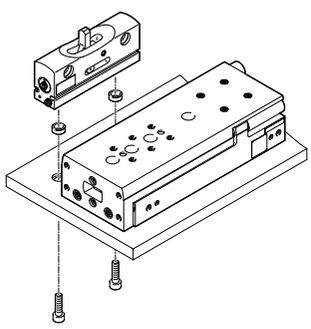

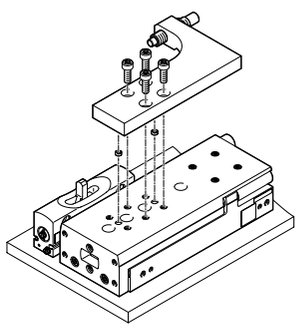

chanhvinh.com

Accessories

Shock absorber retainer DADP

Material:
Anodised wrought aluminium alloy
RoHS-compliant

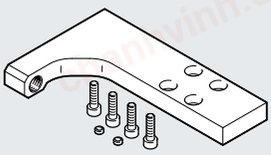

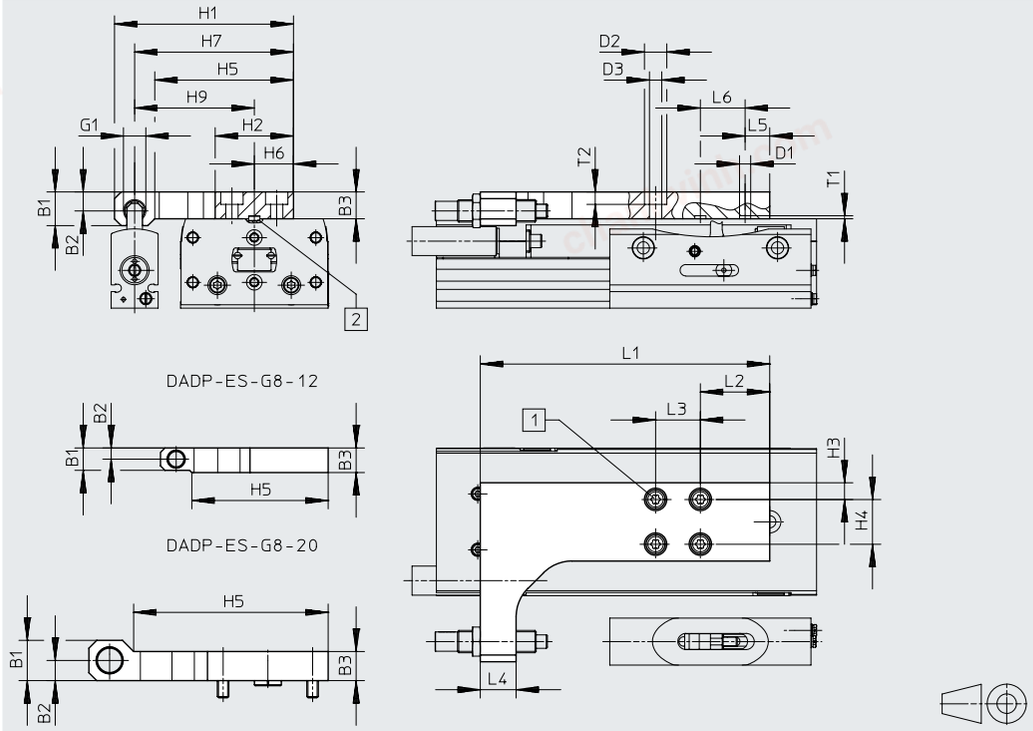

[1] DGST-12: M4x14-10.9
DGST-16: M5x14-10.9
DGST-20: M5x14-10.9
DGST-25: M6x18-10.9

[1] Centring sleeve ZBH

Dimensions and ordering data

For size	B1 ±0.1	B2	B3 ±0.1	H1	H2	H3	H4	H5	H6	H7	H9	D1 Ø	D2 Ø	D3 Ø	G1
12	10	5	11	75	35	7.5	20	61	17.5	68	50.5	5^{H7}	8	4.5	M8x1
16	15.1	8.5	12	80	35	7.5	20	62	17.5	71	53.5	5^{H7}	10	5.5	M10x1
20	18	9	13	107	54	7	40	87	27	97.8	70.8	12^{H7}	10	5.5	M12x1
25	24.6	15.6	14	126	70	15	40	90	35	115.3	80.3	12^{H7}	11	6.6	M14x1

For size	L1	L2	L3	L4	L5	L6	T1 ±0.05	T2	Weight [g]	Part no.	Type
12	119.9	25	20	16	5	3x20	1.35	4.4	151	**8159234**	**DADP-ES-G8-12**
16	129.4	31	20	16	11	3x20	1.35	5.6	182	**8159235**	**DADP-ES-G8-16**
20	131	8	40	25	8	2x40	2.65	6.6	307	**8159236**	**DADP-ES-G8-20**
25	150.5	10.5	40	32	10.5	2x40	2.65	6.4	506	**8159237**	**DADP-ES-G8-25**

Ordering data

	For size	Description	Part no.	Type	PU[1]
Centring sleeve ZBH				Datasheets → Internet: zbh	
	12, 16	For centring the shock absorber retainer (2 pieces included in the scope of delivery of the shock absorber retainer)	**8146543**	**ZBH-5-B**	10
	20, 25		**8137185**	**ZBH-12-B**	

1) Packaging unit

Note

- A shock absorber retainer DADP-ES is additionally required when using an intermediate-position module
- Operation without cushioning components is not permitted
- Cushioning components are not included in the scope of delivery
- The size of the shock absorbers for the mini slides and for the relevant shock absorber retainer are identical. Shock absorber selection
→ page 55
- The same cushioning component as is used in the end positions of the mini slide is used for cushioning the intermediate position

chanhvinh.com

Accessories

Ordering data – Shock absorbers

	For size	Description	Part no.	Type
For DGST-...-P				Datasheets → Internet: dyef
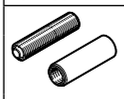	6	• Scope of delivery: 1 cushioning component and 1 threaded sleeve • Elastic cushioning rings/plates at both ends • Included in the scope of delivery for DGST...-P (pack of 2)	**8073902**	**DYEF-G8-M4-Y1**
			8131070	**DYEF-G8-M4-Y1-F1A**
	8		**8073903**	**DYEF-G8-M5-Y1**
			8131071	**DYEF-G8-M5-Y1-F1A**
	10		**8073904**	**DYEF-G8-M6-Y1**
			8131072	**DYEF-G8-M6-Y1-F1A**
	12		**8073905**	**DYEF-G8-M8-Y1**
			8131073	**DYEF-G8-M8-Y1-F1A**
	16		**8073906**	**DYEF-G8-M10-Y1**
			8131074	**DYEF-G8-M10-Y1-F1A**
	20		**8073907**	**DYEF-G8-M12-Y1**
			8132355	**DYEF-G8-M12-Y1-F1A**
	25		**8073908**	**DYEF-G8-M14-Y1**
			8132356	**DYEF-G8-M14-Y1-F1A**
For DGST-...-P1				Datasheets → Internet: dyef
	6	• Scope of delivery: 1 cushioning component and 1 threaded sleeve • Elastomer cushioning, adjustable at both ends, with fixed stop • Included in the scope of delivery for DGST-...-P1 (pack of 2)	**8160234**	**DYEF-G8-M4-Y1F**
	8		**8160235**	**DYEF-G8-M5-Y1F**
	10		**8160236**	**DYEF-G8-M6-Y1F**
	12		**8160237**	**DYEF-G8-M8-Y1F**
	16		**8160238**	**DYEF-G8-M10-Y1F**
For DGST-...-E				Datasheets → Internet: dyef
	6	• Scope of delivery: 1 cushioning component and 1 threaded sleeve • Elastomer cushioning, short, at both ends • Included in the scope of delivery for DGST...-E (pack of 2)	**8159470**	**DYEF-G8-S-M4-Y1**
	8		**8159471**	**DYEF-G8-S-M5-Y1**
	10		**8159472**	**DYEF-G8-S-M6-Y1**
	12		**8159473**	**DYEF-G8-S-M8-Y1**
	16		**8159474**	**DYEF-G8-S-M10-Y1**
	20		**8159475**	**DYEF-G8-S-M12-Y1**
	25		**8159476**	**DYEF-G8-S-M14-Y1**
For DGST-...-Y12				Datasheets → Internet: dyss
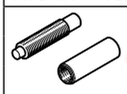	6	• Scope of delivery: 1 cushioning component and 1 threaded sleeve • Shock absorber, self-adjusting, linear, at both ends, external • Included in the scope of delivery for DGST...-Y12 (pack of 2) • Only possible from a stroke of 30 mm • Set minimum stroke ≥ 2x cushioning length	**8073911**	**DYSS-G8-2-4-Y1F**
			8119980	**DYSS-G8-2-4-Y1F-F1A**
	8		**8111383**	**DYSS-G8-3-4-Y1F-G2**
			8119981	**DYSS-G8-3-4-Y1F-F1A-G2**
	10		**8111384**	**DYSS-G8-4-4-Y1F-G2**
			8119982	**DYSS-G8-4-4-Y1F-F1A-G2**
	12		**8073914**	**DYSS-G8-5-5-Y1F**
			8119983	**DYSS-G8-5-5-Y1F-F1A**
	16		**8073915**	**DYSS-G8-7-5-Y1F**
			8119984	**DYSS-G8-7-5-Y1F-F1A**
	20		**8073916**	**DYSS-G8-8-8-Y1F**
			8132349	**DYSS-G8-8-8-Y1F-F1A**
	25		**8073917**	**DYSS-G8-10-10-Y1F**
			8132350	**DYSS-G8-10-10-Y1F-F1A**

Monitoring with distance sensor SOIA

To monitor the application and condition of the damping elements. Enables predictive maintenance and increases reliability and accuracy.

The following parameters can be monitored:

- Impact velocity
- End position
- Energy consumption
- Residual energy
- Damping reserve

Distance sensor SOIA, inductive

Datasheets → Internet: soia

	Mounting type	Displacement measuring range	Switching output	Electrical connection	Part no.	Type
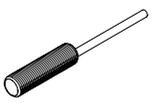	Flush	0 ... 2 mm	PNP/NPN, switchable, Push-pull	Open end	**8161194**	**SOIA-M8PB-PNLK-LE**
		0 ... 4 mm			**8161198**	**SOIA-M12PB-PNLK-LE**
	Not flush				**8161196**	**SOIA-M8PNB-PNLK-LE**
		0 ... 7 mm			**8161200**	**SOIA-M12PNB-PNLK-LE**

chanhvinh.com

Accessories

Ordering data

	For size	Description	Part no.	Type	PU[1]
Centring sleeve/Centring pin ZBH, ZBS					Datasheets → Internet: zbh
	6, 8, 10, 12, 16	For centring loads and attachments on the slide	**8146543**	**ZBH-5-B**	10
	20, 25		**8137185**	**ZBH-12-B**	
	6	For centring loads and attachments on the yoke plate	**525273**	**ZBS-2**	
	8, 10		**8146543**	**ZBH-5-B**	
	12, 16		**8146544**	**ZBH-7-B**	
	20, 25		**8137185**	**ZBH-12-B**	
	6, 8	For centring the mini slide during mounting	**8119593**	**ZBH-5-M4**	
	10, 12		**8146544**	**ZBH-7-B**	
	16		**8137184**	**ZBH-9-B**	
	20, 25		**8137185**	**ZBH-12-B**	
Connector sleeve ZBV					Datasheets → Internet: zbv
	20	For centring loads and attachments on the yoke plate	**548806**	**ZBV-12-9**	10
One-way flow control valve GRLA					Datasheets → Internet: grla
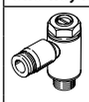	6	For regulating speed	**175041**	**GRLA-M3-QS-3**	1
	8, 10, 12, 16		**193139**	**GRLA-M5-QS-6-D**	
	20, 25		**193145**	**GRLA-1/8-QS-8-D**	
One-way flow control valve GRLA for connection kit DADG-AK-G8-...					Datasheets → Internet: grla
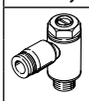	6	For regulating speed	**175053**	**GRLA-M5-QS-3-LF-C**	1
	8, 10, 12, 16		**193139**	**GRLA-M5-QS-6-D**	
	20, 25		**193145**	**GRLA-1/8-QS-8-D**	
Push-in fitting QSM					Datasheets → Internet: qs
	6	For connecting tubing with standard O.D.	**153303**	**QSM-M3-4**	10
	8, 10, 12, 16		**153304**	**QSM-M5-4**	
	20, 25		**153307**	**QSM-1/8-6**	
Push-in fitting QSM for connection kit DADG-AK-G8-...					Datasheets → Internet: qs
	6	For connecting tubing with standard O.D.	**153302**	**QSM-M5-3**	10
			153313	**QSM-M5-3-I**	
	8, 10, 12, 16		**153304**	**QSM-M5-4**	
	20, 25		**153307**	**QSM-1/8-6**	

1) Packaging unit

chanhvinh.com

Accessories

Proximity switch for size 6 ... 12

Ordering data – Proximity switch for C-slot, magneto-resistive

Datasheets → Internet: smt

	Type of mounting	Switching output	Electrical connection, Outlet direction of connection	Cable length [m]	Part no.	Type
N/O						
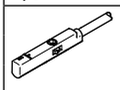	Inserted in the slot from above	PNP	Cable, 3-core, lengthwise	2.5	**551373**	**SMT-10M-PS-24V-E-2.5-L-OE**
			Plug M8x1, 3-pin, in-line	0.3	**551375**	**SMT-10M-PS-24V-E-0.3-L-M8D**
			Plug M8x1, 3-pin, crosswise	0.3	**551376**	**SMT-10M-PS-24V-E-0.3-Q-M8D**
		NPN	Cable, 3-wire	2.5	**551377**	**SMT-10M-NS-24V-E-2.5-L-OE**
			Cable, 3-wire	2.5	**551378**	**SMT-10M-NS-24V-E-2.5-Q-OE**
			Plug M8x1, 3-pin, in-line	0.3	**551379**	**SMT-10M-NS-24V-E-0.3-L-M8D**
			Plug M8x1, 3-pin, crosswise	0.3	**551380**	**SMT-10M-NS-24V-E-0.3-Q-M8D**

Proximity switch for size 16 ... 25

Ordering data – Proximity switch for T-slot, magneto-resistive

Datasheets → Internet: smt

	Type of mounting	Switching output	Electrical connection	Cable length [m]	Part no.	Type
N/O						
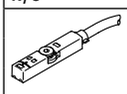	Inserted in the slot from above, flush with the cylinder profile, short design	PNP	Cable, 3-core	2.5	**574335**	**SMT-8M-A-PS-24V-E-2.5-OE**
			Plug M8x1, 3-pin	0.3	**574334**	**SMT-8M-A-PS-24V-E-0.3-M8D**
		NPN	Cable, 3-core	2.5	**574338**	**SMT-8M-A-NS-24V-E-2.5-OE**
			1x M8 plug, 3-pin	0.3	**574339**	**SMT-8M-A-NS-24V-E-0.3-M8D**

Connecting cables NEBA, straight

	Electrical connection 1, connection technology	Electrical connection 2, connection technology	Electrical connection 2, number of pins/cores	Cable length	Part no.	Type
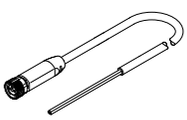	M8x1 A-coded to EN 61076-2-104	Open end	3	2.5 m	**8078223**	**NEBA-M8G3-U-2.5-N-LE3**
				5 m	**8078224**	**NEBA-M8G3-U-5-N-LE3**

Connecting cables NEBA, angled

	Electrical connection 1, connection technology	Electrical connection 2, connection technology	Electrical connection 2, number of pins/cores	Cable length	Part no.	Type
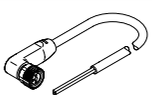	M8x1 A-coded to EN 61076-2-104	Open end	3	2.5 m	**8078230**	**NEBA-M8W3-U-2.5-N-LE3**
				5 m	**8078231**	**NEBA-M8W3-U-5-N-LE3**

chanhvinh.com

Accessories

Position transmitter

The position transmitter continuously senses the position of the piston. It has an analogue output with an output signal that is proportional to the piston position.

Ordering data – Position transmitter for T-slot

Datasheets → Internet: position transmitter

	For Ø	Position measuring range	Analogue output [V]	Analogue output [mA]	Type of mounting	Electrical connection	Cable length [m]	Part no.	Type
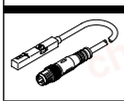	16 ... 25	0 ... 40	0 ... 10	–	Inserted in the slot from above	Plug M8x1, 4-pin, in-line	0.3	**553744**	**SMAT-8M-U-E-0.3-M8D**
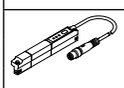	16 ... 25	0 ... 50	–	4 ... 20	Inserted in the slot from above	Plug M8x1, 4-pin, in-line	0.3	**1531265**	**SDAT-MHS-M50-1L-SA-E-0.3-M8**
		0 ... 80						**1531266**	**SDAT-MHS-M80-1L-SA-E-0.3-M8**
		0 ... 100						**1531267**	**SDAT-MHS-M100-1L-SA-E-0.3-M8**
		0 ... 125						**1531268**	**SDAT-MHS-M125-1L-SA-E-0.3-M8**
		0 ... 160						**1531269**	**SDAT-MHS-M160-1L-SA-E-0.3-M8**

Ordering data – Position transmitter for T-slot

Datasheets → Internet: sdas

	Position measuring range	Description	Type of mounting	Electrical connection	Cable length [m]	Part no.	Type
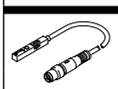	For Ø 16: ≤ 28 For Ø 20, 25: ≤ 32	Choice of two operating modes: two adjustable switching outputs IO-Link®	Inserted in the slot from above	Plug M8x1, 4-pin, in-line	0.3	**8063974**	**SDAS-MHS-M40-1L-PNLK-PN-E-0.3-M8**
				Cable, open end	2.5	**8063975**	**SDAS-MHS-M40-1L-PNLK-PN-E-2.5-LE**

Connecting cables NEBA, straight

	Electrical connection 1, connection technology	Electrical connection 2, connection technology	Electrical connection 2, number of pins/cores	Cable length	Part no.	Type
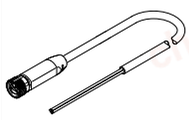	M8x1 A-coded to EN 61076-2-104	Open end	4	2.5 m	**8078227**	**NEBA-M8G4-U-2.5-N-LE4**
				5 m	**8078228**	**NEBA-M8G4-U-5-N-LE4**

Connecting cables NEBA, angled

	Electrical connection 1, connection technology	Electrical connection 2, connection technology	Electrical connection 2, number of pins/cores	Cable length	Part no.	Type
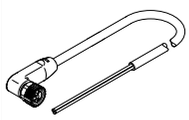	M8x1 A-coded to EN 61076-2-104	Open end	4	2.5 m	**8078233**	**NEBA-M8W4-U-2.5-N-LE4**
				5 m	**8078234**	**NEBA-M8W4-U-5-N-LE4**