chanhvinh.com

Push-in fitting, stainless steel CRQS

FESTO



chanhvinh.com

Characteristics

At a glance

For pneumatic applications with a temperature range up to 120°C and a pressure range up to 10 bar.
Maximum corrosion resistance and chemical resistance with approval for use in the food and packaging industry.

- Corrosion resistance class CRC 4 according to Festo standard 940 070
- Unlimited use in the food industry
- Operating media: compressed air, vacuum, (water)

The push-in fitting CRQS can be used in combination with the food-safe plastic tubing PFAN in all areas of the food & packaging industry, e.g. in areas where the use of stainless steel is stipulated. Used together, they easily resist all cleaning agents and lubricants.

For further information, see the downloadable additional document.

Additional documents

Link crqs

The additional document PUSH-IN-FITTINGS-ADD contains further information on tubing/fitting combinations and thread types, as well as installation instructions.

Diagrams

Link crqs

The diagrams shown in this document are also available online. These can be used to display precise values.

Pneumatic connection 1

Metric threads have a constant installation depth. Sealing is guaranteed by the chambered O-ring. This can be replaced, so that the screw connection can be reused several times.

Self-locking R threads according to EN 10226-1 and ISO 7/1 require a suitable sealing agent. They can be reused up to 5 times (care must be taken to ensure that the sealing agent layer cannot enter the compressed air system due to abrasion). Simply screw in the R thread by hand and tighten it by turning it 1 or 2 times using an open-ended spanner.

Note: When using push-in fittings with an internal hex, ensure that the Allen key is not inserted too far into the fitting when tightening it to prevent the risk of damaging the components behind the fitting.

chanhvinh.com

Type code

001	Series	
CRQS	Push-in fitting, stainless steel	
CRQSY	Push-in Y-connector, stainless steel	
CRQSS	Push-in bulkhead connector, stainless steel	
CRQST	Push-in T-connector, stainless steel	
CRQSL	Push-in L-connector, stainless steel	

002	Pneumatic connection 1	
1/8	Male thread R1/8	
1/4	Male thread R1/4	
3/8	Male thread R3/8	
1/2	Male thread R1/2	
4	Push-in connector 4 mm	
6	Push-in connector 6 mm	
8	Push-in connector 8 mm	
10	Push-in connector 10 mm	
12	Push-in connector 12 mm	
16	Push-in connector mm	
M5	Male thread M5	

003	Pneumatic connection 2	
4	For tubing O.D. 4 mm	
6	For tubing O.D. 6 mm	
8	For tubing O.D. 8 mm	
10	For tubing O.D. 10 mm	
12	For tubing O.D. 12 mm	
16	For tubing O.D. 16 mm	

004	Mounting method	
	Standard	
I	Internal hexagon	

chanhvinh.com

Datasheet

General technical data – Push-in fittings

Pneumatic connection, port 1	Male thread M5	Male thread R1/8	Male thread R1/4	Male thread R3/8	Male thread R1/2
Design	Push-pull principle				
Mounting position	Any				
Type of seal on screwed plug	Sealing ring	–			
Nominal torque	1.33 Nm	–			
Tolerance for nominal tightening torque	±20%	–			
Nominal size	2 mm	2.2 ... 5.2 mm	3.6 ... 6 mm	6 ... 8.1 mm	7.9 ... 10.1 mm
Size of pack	1				

General technical data – Push-in connectors

Pneumatic connection, port 1	For tubing outer diameter of 4 mm	For tubing outside diameter of 6 mm	For tubing outer diameter of 8 mm	For tubing outer diameter of 10 mm	For tubing outer diameter of 12 mm	For tubing outer diameter of 16 mm
Design	Push-pull principle					
Mounting position	Any					
Nominal size	2 ... 2.4 mm	2.4 ... 3.7 mm	3.7 ... 5.8 mm	5.6 ... 6.7 mm	6.6 ... 8 mm	7.9 ... 10.4 mm
Size of pack	1					

Tubing insertion depths

Pneumatic connection, port 1	For tubing outer diameter of 4 mm	For tubing outside diameter of 6 mm	For tubing outer diameter of 8 mm	For tubing outer diameter of 10 mm	For tubing outer diameter of 12 mm	For tubing outer diameter of 16 mm
Tubing insertion depth [1]	18 mm	19.5 mm	21.5 mm	25.5 mm	27 mm	32 mm

1) The indicated tubing insertion depths are reference values and may vary slightly depending on the type.

Operating and environmental conditions

Operating pressure complete temperature range	-0.095 ... 1 MPa
Operating pressure complete temperature range	-0.95 ... 10 bar
Operating pressure complete temperature range	-13.775 ... 145 psi
Temperature-dependent operating pressure	-0.095 ... 1 MPa
Temperature-dependent operating pressure	-0.95 ... 10 bar
Temperature-dependent operating pressure	-13.775 ... 145 psi
Operating medium	Compressed air to ISO 8573-1:2010 [7:-:-] Water (liquid, ice-free)
Note on operating and pilot medium	Lubricated operation possible
Ambient temperature	-15 ... 120°C
Corrosion resistance class CRC [1]	4 - Very high corrosion stress
Suitable for use with food [2]	See supplementary material information
Note on operating pressure	Water: max. 0.6 MPa at max. 50°C

1) More information www.festo.com/x/topic/kbk

2) Next information www.festo.com/catalogue/crqs → Support/Downloads.

chanhvinh.com

Datasheet

Operating pressure p as a function of temperature t

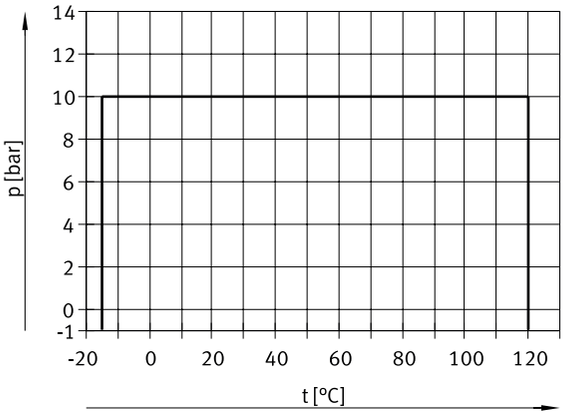

Materials

Material housing	High-alloy stainless steel
Material screwed plug	High-alloy stainless steel
Material release ring	High-alloy stainless steel
Colour of release ring	Silver
Thrust ring material	High-alloy stainless steel
Material tubing seal	Fluoro rubber
Material thread seal	Fluoro rubber High-alloy stainless steel
Material tubing clamp component	High-alloy stainless steel
Material nut	High-alloy stainless steel
Note on materials	RoHS compliant
LABS (PWIS) conformity	VDMA24364-B1/B2-L

chanhvinh.com

Dimensions

Dimensions – Push-in fitting CRQS, M thread Download CAD data www.festo.com

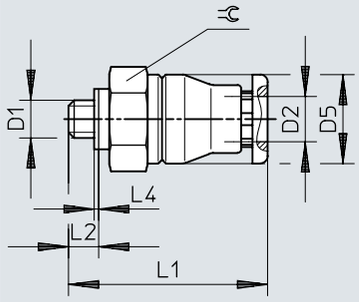

	D1	D2 ø	D5 ø	L1	L2	L4	⊂
CRQS-M5-4	M5x0,8	4	9,8	24,4	3	0,5	10
CRQS-M5-6		6	11,8	25,6	3	0,5	12

chanhvinh.com

Dimensions

Dimensions – Push-in fitting CRQS, R thread Download CAD data www.festo.com

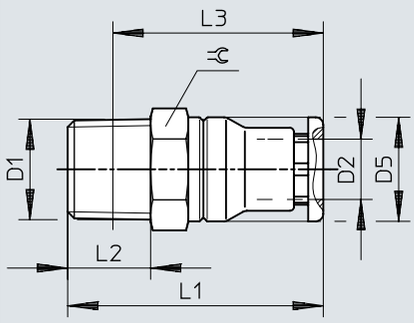

	D1	D2 ø	D5 ø	L1	L2	L3	⫧
CRQS-1/8-4	R1/8	4	9,8	27,4	8	23,4	10
CRQS-1/8-6		6	11,8	27,6	8	23,7	12
CRQS-1/8-8		8	13,8	30,9	8	27	14
CRQS-1/4-6	R1/4	6	11,8	31,6	11	25,6	14
CRQS-1/4-8		8	13,8	33,9	11	27,9	14
CRQS-1/4-10		10	16,8	36	11	30	17
CRQS-3/8-10	R3/8	10	16,8	38	12	31,7	17
CRQS-3/8-12		12	19,8	39,9	12	33,6	21
CRQS-1/2-12	R1/2	12	19,8	42,9	15	34,7	22
CRQS-1/2-16		16	23,7	49,7	15	41,6	24

chanhvinh.com

Dimensions

Dimensions – Push-in fitting CRQS- ...-I, M thread Download CAD data www.festo.com

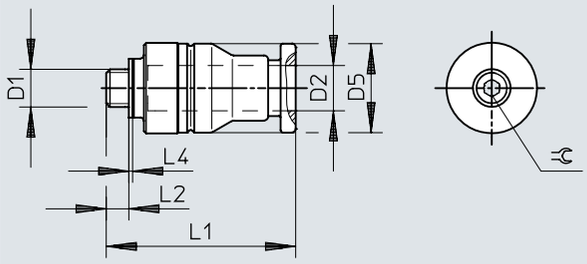

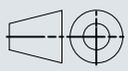

	D1	D2 ø	D5 ø	L1	L2	L4	⫧
CRQS-M5-4-I	M5	4	10	22,9	3	0,5	2
CRQS-M5-6-I		6	12	25,1	3	0,5	2

chanhvinh.com

Dimensions

Dimensions – Push-in fitting CRQS- ...-I, R thread Download CAD data www.festo.com

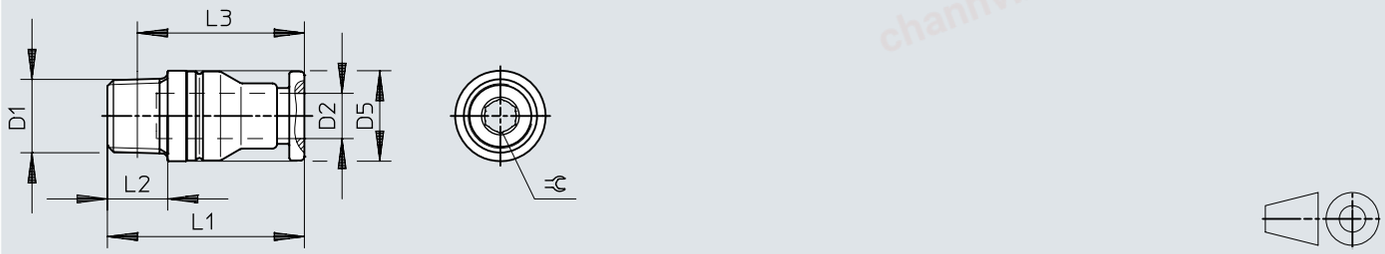

	D1	D2 ø	D5 ø	L1	L2	L3	⫧
CRQS-1/8-6-I	R1/8	6	4,1	12	26,1	8	4
CRQS-1/8-8-I		8	5,1	14	30,4	8	5
CRQS-1/4-8-I	R1/4	8	5,8	14	31,4	11	6
CRQS-1/4-10-I		10	5,9	17	36	11	6
CRQS-3/8-10-I	R3/8	10	6	17	34	12	6
CRQS-3/8-12-I		12	7,6	20	36,4	12	8
CRQS-1/2-12-I	R1/2	12	8,1	22	39,4	15	8
CRQS-1/2-16-I		16	10,1	24	46,7	15	12

chanhvinh.com

Dimensions

Dimensions – Push-in connector CRQS Download CAD data www.festo.com

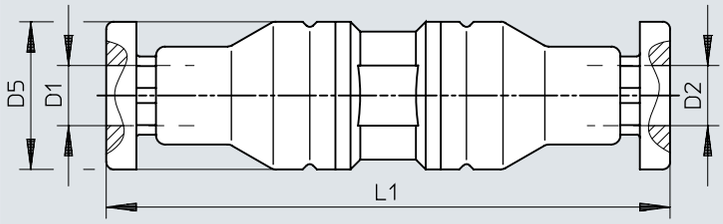

	D1 ø	D2 ø	D5 ø	L1
CRQS-4	4	4	9,8	37,7
CRQS-6	6	6	11,8	40,3
CRQS-8	8	8	13,8	44,9
CRQS-10	10	10	16,8	52
CRQS-12	12	12	19,8	55,8
CRQS-16	16	16	23,7	66,5
CRQS-6-4	6	4	12	38,8
CRQS-8-6	8	6	14	42,4
CRQS-10-8	10	8	17	48,5
CRQS-12-10	12	10	20	53,9
CRQS-16-12	16	12	24	61,1

chanhvinh.com

Dimensions

Dimensions – Push-in bulkhead connector CRQSS

Download CAD data www.festo.com

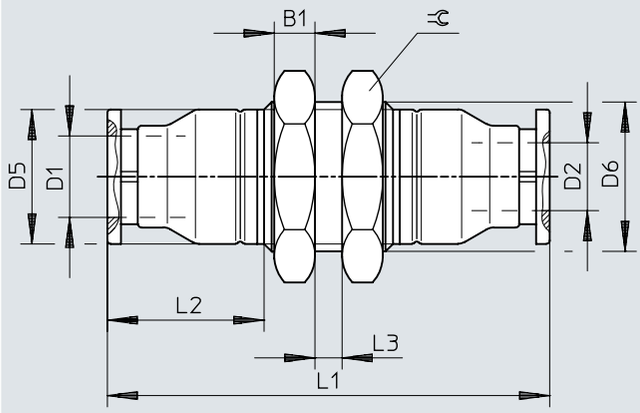

	D1 ø	D2 ø	B1	D5 ø	D6 ø	L1	L2	L3 max.	⊂
CRQSS-4	4	4	4	9,8	M12x1	43,7	15,4	4	14
CRQSS-6	6	6	4	11,8	M14x1	46,3	15,6	6	17
CRQSS-8	8	8	4	13,8	M16x1	50,9	17,9	6	19
CRQSS-10	10	10	5	16,8	M20x1	57	20	6	24
CRQSS-12	12	12	6	19,8	M22x1	62,8	21,9	6	27
CRQSS-16	16	16	6	23,7	M27x1,5	72,6	26,7	6	32

chanhvinh.com

Dimensions

Dimensions – Push-in L-fitting CRQSL, M thread Download CAD data www.festo.com

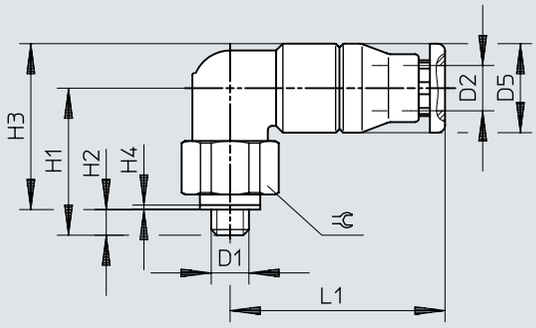

	D1	D2	D5 ø	H1	H2	H3	H4	L1	⊂
CRQSL-M5-4	M5x0,8	4	9,8	17	3	18,9	0,5	22,4	10
CRQSL-M5-6		6	11,8	19	3	21,9	0,5	23,6	12

chanhvinh.com

Dimensions

Dimensions – Push-in L-fitting CRQSL, R thread Download CAD data www.festo.com

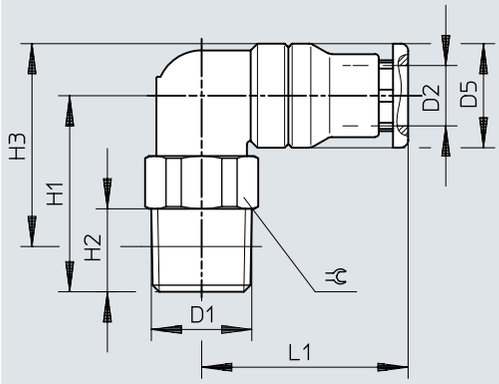

	D1	D2 ø	D5 ø	H1	H2	H3	L1	⇔
CRQSL-1/8-4	R1/8	4	9,8	19	8	19,9	22,4	10
CRQSL-1/8-6		6	11,8	20,5	8	22,4	23,6	12
CRQSL-1/8-8		8	13,8	23	8	25,9	26,4	14
CRQSL-1/4-6	R1/4	6	11,8	23	11	22,9	23,6	14
CRQSL-1/4-8		8	13,8	25	11	25,9	26,4	14
CRQSL-1/4-10		10	16,8	28,5	11	30,9	30,5	17
CRQSL-3/8-10	R3/8	10	16,8	28,5	12	30,6	30,5	17
CRQSL-3/8-12		12	19,8	30	12	33,6	33,4	21
CRQSL-1/2-12	R1/2	12	19,8	34	15	35,7	33,4	22
CRQSL-1/2-16		16	23,7	36	15	39,7	40,7	24

Dimensions

Dimensions – Push-in L-connector CRQSL Download CAD data www.festo.com

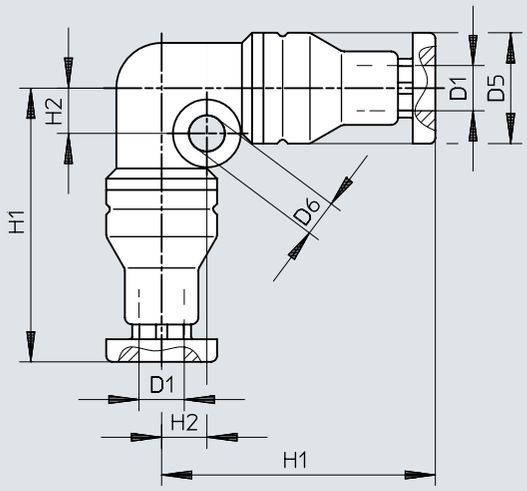

	D1 Ø	D5 Ø	D6 Ø	H1	H2
CRQSL-4	4	9,8	3,2	24,4	4
CRQSL-6	6	11,8	3,2	26,6	5
CRQSL-8	8	13,8	3,2	29,9	6
CRQSL-10	10	16,8	4,2	35	7
CRQSL-12	12	19,8	4,2	37,9	8
CRQSL-16	16	23,7	4,2	45,2	9,5

chanhvinh.com

Dimensions

Dimensions – Push-in T-fitting CRQST, M thread Download CAD data www.festo.com

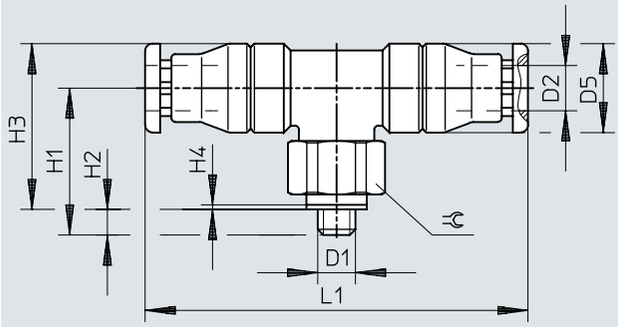

	D1	D2 ø	D5 ø	H1	H2	H3	H4	L1	⊂
CRQST-M5-4	M5x0,8	4	9,8	17	3	18,9	0,5	44,4	10
CRQST-M5-6		6	11,8	19	3	21,9	0,5	47,3	12

chanhvinh.com

Dimensions

Dimensions – Push-in T-fitting CRQST, R thread Download CAD data www.festo.com

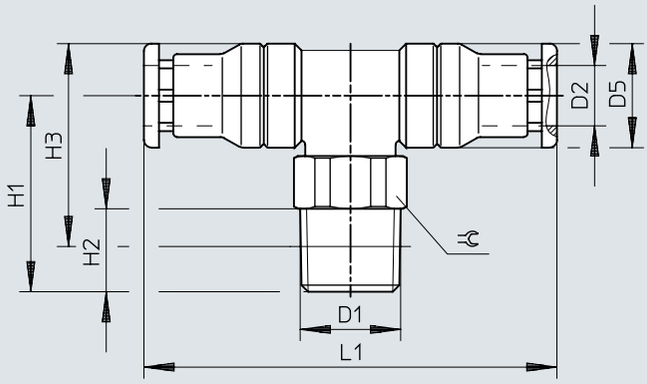

	D1	D2 ø	D5 ø	H1	H2	H3	L1	⬡
CRQST-1/8-6	R1/8	6	11,8	20,5	8	22,4	47,3	12
CRQST-1/8-8		8	13,8	23	8	25,9	52,5	14
CRQST-1/4-8	R1/4	8	13,8	25	11	25,9	52,5	14
CRQST-1/4-10		10	16,8	28,5	11	30,9	61	17
CRQST-3/8-10	R3/8	10	16,8	28,5	12	30,6	61	17
CRQST-3/8-12		12	19,8	30	12	33,6	66,6	21
CRQST-1/2-12	R1/2	12	19,8	34	15	35,7	66,6	22
CRQST-1/2-16		16	23,7	36	15	39,7	81,4	24

chanhvinh.com

Dimensions

Dimensions – Push-in T-connector CRQST Download CAD data www.festo.com

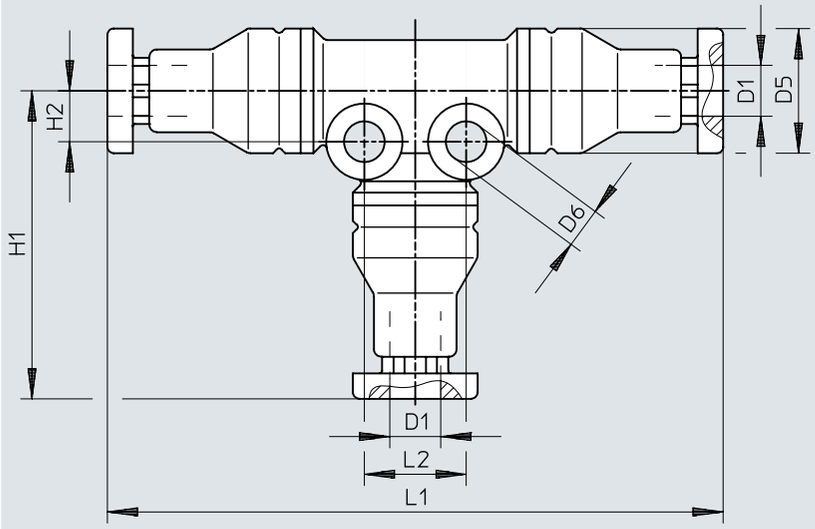

	D1 ø	D5 ø	D6 ø	H1	H2	L1	L2
CRQST-4	4	9,8	3,2	24,4	4	48,4	8
CRQST-6	6	11,8	3,2	26,6	5	53,3	10
CRQST-8	8	13,8	3,2	29,9	6	59,5	12
CRQST-10	10	16,8	4,2	35	7	69,9	14
CRQST-12	12	19,8	4,2	37,9	8	75,6	16
CRQST-16	16	23,7	4,2	45,2	9,5	90,4	19

Dimensions

Dimensions – Push-in Y-connector CRQSY Download CAD data www.festo.com

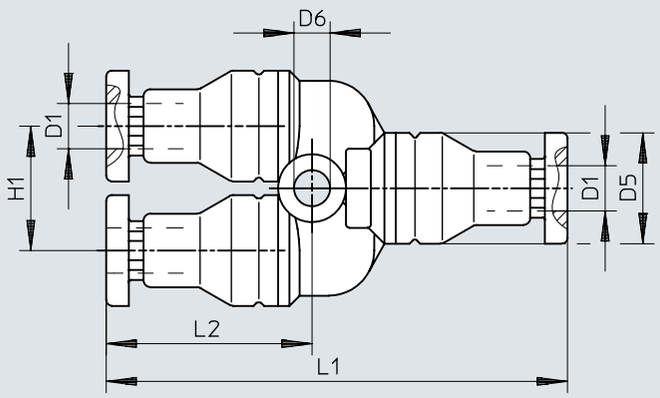

	D1 ø	D5 ø	D6 ø	H1	L1	L2
CRQSY-4	4	9,8	3,2	11	41,1	18,4
CRQSY-6	6	11,8	3,2	13	44,3	18,6
CRQSY-8	8	13,8	3,2	15	51,4	20,9
CRQSY-10	10	16,8	4,3	18	58,5	23,5
CRQSY-12	12	19,8	4,3	21	64,8	25,4
CRQSY-16	16	23,7	4,3	25	78,5	30,2

chanhvinh.com

Ordering data

Ordering information – Push-in fitting CRQS(male thread with external hex)

	Pneumatic connection, port 1	Pneumatic connection, port 2	Nominal size	Product weight	Part no.	Type
	Male thread M5	For tubing outside diameter of 4 mm	2 mm	6 g	**162860**	**CRQS-M5-4**
		For tubing outside diameter of 6 mm		8.4 g	**162861**	**CRQS-M5-6**
	Male thread R1/8	For tubing outside diameter of 4 mm	2.5 mm	8.7 g	**132643**	**CRQS-1/8-4**
		For tubing outside diameter of 6 mm	4.1 mm	9.9 g	**162862**	**CRQS-1/8-6**
		For tubing outside diameter of 8 mm	5.1 mm	12 g	**162863**	**CRQS-1/8-8**
	Male thread R1/4	For tubing outside diameter of 6 mm	4.2 mm	18 g	**132644**	**CRQS-1/4-6**
		For tubing outside diameter of 8 mm	5.8 mm		**162864**	**CRQS-1/4-8**
		For tubing outside diameter of 10 mm	5.9 mm	22 g	**162865**	**CRQS-1/4-10**
	Male thread R3/8		6 mm	29 g	**162866**	**CRQS-3/8-10**
		For tubing outer diameter of 12 mm	7.6 mm	37 g	**162867**	**CRQS-3/8-12**
	Male thread R1/2		8.1 mm	55 g	**162868**	**CRQS-1/2-12**
		For tubing outside diameter of 16 mm	10.1 mm	59 g	**162869**	**CRQS-1/2-16**

Ordering data – Push-in fitting CRQS-...-I(male thread with hex socket)

	Pneumatic connection, port 1	Pneumatic connection, port 2	Nominal size	Product weight	Part no.	Type
	Male thread M5	For tubing outside diameter of 4 mm	2 mm	5 g	**132328**	**CRQS-M5-4-I**
		For tubing outside diameter of 6 mm		7.7 g	**132329**	**CRQS-M5-6-I**
	Male thread R1/8		4.1 mm	8.4 g	**132330**	**CRQS-1/8-6-I**
		For tubing outside diameter of 8 mm	5.1 mm	12 g	**132331**	**CRQS-1/8-8-I**
	Male thread R1/4		5.8 mm	15 g	**132332**	**CRQS-1/4-8-I**
		For tubing outside diameter of 10 mm	5.9 mm	21 g	**132333**	**CRQS-1/4-10-I**
	Male thread R3/8		6 mm	24 g	**132334**	**CRQS-3/8-10-I**
		For tubing outer diameter of 12 mm	7.6 mm	28 g	**132335**	**CRQS-3/8-12-I**
	Male thread R1/2		8.1 mm	45 g	**132336**	**CRQS-1/2-12-I**
		For tubing outside diameter of 16 mm	10.1 mm	47 g	**132337**	**CRQS-1/2-16-I**

chanhvinh.com

Ordering data

Ordering information – Push-in connector CRQS

	Pneumatic connection, port 1	Pneumatic connection, port 2	Nominal size	Product weight	Part no.	Type
	For tubing outer diameter of 4 mm	For tubing outside diameter of 4 mm	2.4 mm	9.1 g	**130645**	**CRQS-4**
	For tubing outside diameter of 6 mm			11 g	**130651**	**CRQS-6-4**
		For tubing outside diameter of 6 mm	3.7 mm	14 g	**130646**	**CRQS-6**
	For tubing outer diameter of 8 mm			15 g	**130652**	**CRQS-8-6**
		For tubing outside diameter of 8 mm	5.8 mm	18 g	**130647**	**CRQS-8**
	For tubing outer diameter of 10 mm			22 g	**130653**	**CRQS-10-8**
		For tubing outside diameter of 10 mm	6.6 mm	29 g	**130648**	**CRQS-10**
	For tubing outer diameter of 12 mm			35 g	**130654**	**CRQS-12-10**
		For tubing outer diameter of 12 mm	7.9 mm	44 g	**130649**	**CRQS-12**
	For tubing outer diameter of 16 mm			50 g	**130655**	**CRQS-16-12**

Ordering data – Push-in bulkhead connector CRQSS

	Pneumatic connection, port 1	Pneumatic connection, port 2	Nominal size	Product weight	Part no.	Type
	For tubing outer diameter of 4 mm	For tubing outside diameter of 4 mm	2.4 mm	19 g	**164210**	**CRQSS-4**
	For tubing outside diameter of 6 mm	For tubing outside diameter of 6 mm	3.7 mm	27 g	**164211**	**CRQSS-6**
	For tubing outer diameter of 8 mm	For tubing outside diameter of 8 mm	5.7 mm	35 g	**164213**	**CRQSS-8**
	For tubing outer diameter of 10 mm	For tubing outside diameter of 10 mm	6.7 mm	60 g	**164215**	**CRQSS-10**
	For tubing outer diameter of 12 mm	For tubing outer diameter of 12 mm	7.9 mm	87 g	**164217**	**CRQSS-12**
	For tubing outer diameter of 16 mm	For tubing outside diameter of 16 mm	10.4 mm	118 g	**164219**	**CRQSS-16**

Ordering data – Push-in L-fitting CRQSL (male thread with external hex)

	Pneumatic connection, port 1	Pneumatic connection, port 2	Nominal size	Product weight	Part no.	Type
	Male thread M5	For tubing outside diameter of 4 mm	2 mm	12 g	**162870**	**CRQSL-M5-4**
		For tubing outside diameter of 6 mm		18 g	**162871**	**CRQSL-M5-6**
	Male thread R1/8	For tubing outside diameter of 4 mm	2.2 mm	14 g	**132598**	**CRQSL-1/8-4**
		For tubing outside diameter of 6 mm	3.9 mm	19 g	**162872**	**CRQSL-1/8-6**
		For tubing outside diameter of 8 mm	5.2 mm	26 g	**162873**	**CRQSL-1/8-8**

chanhvinh.com

Ordering data

Ordering data – Push-in L-fitting CRQSL (male thread with external hex)

	Pneumatic connection, port 1	Pneumatic connection, port 2	Nominal size	Product weight	Part no.	Type
	Male thread R1/4	For tubing outside diameter of 6 mm	3.6 mm	26 g	**132599**	**CRQSL-1/4-6**
		For tubing outside diameter of 8 mm	5.1 mm	30 g	**162874**	**CRQSL-1/4-8**
	Male thread R3/8	For tubing outside diameter of 10 mm	6 mm	42 g	**162875**	**CRQSL-1/4-10**
				49 g	**162876**	**CRQSL-3/8-10**
	Male thread R1/2	For tubing outer diameter of 12 mm	8.1 mm	65 g	**162877**	**CRQSL-3/8-12**
			7.9 mm	85 g	**162878**	**CRQSL-1/2-12**
		For tubing outside diameter of 16 mm	9.4 mm	99 g	**162879**	**CRQSL-1/2-16**

Ordering data – Push-in L-connector CRQSL

	Pneumatic connection, port 1	Pneumatic connection, port 2	Nominal size	Product weight	Part no.	Type
	For tubing outer diameter of 4 mm	For tubing outside diameter of 4 mm	2.1 mm	13 g	**130662**	**CRQSL-4**
	For tubing outside diameter of 6 mm	For tubing outside diameter of 6 mm	3.5 mm	20 g	**130663**	**CRQSL-6**
	For tubing outer diameter of 8 mm	For tubing outside diameter of 8 mm	5.1 mm	27 g	**130664**	**CRQSL-8**
	For tubing outer diameter of 10 mm	For tubing outside diameter of 10 mm	6.1 mm	42 g	**130665**	**CRQSL-10**
	For tubing outer diameter of 12 mm	For tubing outer diameter of 12 mm	7.8 mm	62 g	**130666**	**CRQSL-12**
	For tubing outer diameter of 16 mm	For tubing outside diameter of 16 mm	9.4 mm	91 g	**130667**	**CRQSL-16**

Ordering data – Push-in T-fitting CRQST (male thread with external hex)

	Pneumatic connection, port 1	Pneumatic connection, port 2	Nominal size	Product weight	Part no.	Type
	Male thread M5	For tubing outside diameter of 4 mm	2 mm	17 g	**164200**	**CRQST-M5-4**
		For tubing outside diameter of 6 mm		24 g	**164201**	**CRQST-M5-6**
	Male thread R1/8		3.7 mm	25 g	**164202**	**CRQST-1/8-6**
		For tubing outside diameter of 8 mm	5 mm	33 g	**164203**	**CRQST-1/8-8**
	Male thread R1/4			38 g	**164204**	**CRQST-1/4-8**
		For tubing outside diameter of 10 mm	5.9 mm	56 g	**164205**	**CRQST-1/4-10**
	Male thread R1/2	For tubing outside diameter of 16 mm	9.5 mm	128 g	**164209**	**CRQST-1/2-16**

chanhvinh.com

Ordering data

Ordering data – Push-in T-connector CRQST

	Pneumatic connection, port 1	Pneumatic connection, port 2	Nominal size	Product weight	Part no.	Type
	For tubing outer diameter of 4 mm	For tubing outside diameter of 4 mm	2.1 mm	18 g	**130668**	**CRQST-4**
	For tubing outside diameter of 6 mm	For tubing outside diameter of 6 mm	3.5 mm	27 g	**130669**	**CRQST-6**
	For tubing outer diameter of 8 mm	For tubing outside diameter of 8 mm	5 mm	37 g	**130670**	**CRQST-8**
	For tubing outer diameter of 10 mm	For tubing outside diameter of 10 mm	6.1 mm	59 g	**130671**	**CRQST-10**
	For tubing outer diameter of 12 mm	For tubing outer diameter of 12 mm	8 mm	87 g	**130672**	**CRQST-12**
	For tubing outer diameter of 16 mm	For tubing outside diameter of 16 mm	9.7 mm	126 g	**130673**	**CRQST-16**

Ordering data – Push-in Y-connector CRQSY

	Pneumatic connection, port 1	Pneumatic connection, port 2	Nominal size	Product weight	Part no.	Type
	For tubing outer diameter of 4 mm	For tubing outside diameter of 4 mm	2 mm	15 g	**130656**	**CRQSY-4**
	For tubing outside diameter of 6 mm	For tubing outside diameter of 6 mm	3.3 mm	24 g	**130657**	**CRQSY-6**
	For tubing outer diameter of 8 mm	For tubing outside diameter of 8 mm	4.9 mm	34 g	**130658**	**CRQSY-8**
	For tubing outer diameter of 10 mm	For tubing outside diameter of 10 mm	5.6 mm	52 g	**130659**	**CRQSY-10**
	For tubing outer diameter of 12 mm	For tubing outer diameter of 12 mm	7 mm	80 g	**130660**	**CRQSY-12**