chanhvinh.com

Fairview Microwave
RF COMPONENTS ON DEMAND. Done!

SC6023
DATA SHEET

BNC Male Connector Crimp/Solder Attachment For RG55, RG142 Cable



BNC male connector with crimp/solder attachment for RG55 and RG142, part number SC6023, from Fairview Microwave is in-stock and ships same day. This BNC male connector operates up to a maximum frequency of 4 GHz and offers good VSWR of 1.3:1.

Fairview's BNC male connector SC6023 datasheet specifications and outline drawing are shown in this PDF below. Our extensive offering of RF, microwave and millimeter wave connectors allows designers to configure and customize their signal connections however they like. From providing an I/O for a board design to creating a custom cable assembly configuration, Fairview Microwave has a connector solution to meet your needs. Fairview Microwave also has the expertise to build your custom cable assemblies for you and ship them same-day.

Configuration:

- BNC Male Connector
- 50 Ohms
- Straight Body Geometry
- RG55, RG142 Interface Type
- Crimp/Solder Attachment

Features:

- Operating Frequency of 4 GHz Max.
- Good VSWR of 1.3:1
- Gold Plated Brass Contact
- 30µ in. minimum contact plating

Applications:

- General Purpose Test
- Custom Cable Assemblies

Electrical Specifications

Description	Min	Typ	Max	Units
Frequency Range	DC		4	GHz
VSWR			1.3:1	
Operating Voltage (AC)			500	Vrms

Mechanical Specifications

Size

Length	0.929 in [23.6 mm]
Width/Dia.	0.571 in [14.50 mm]
Weight	0.026 lbs [11.79 g]

Material Specifications

Description	Material	Plating
Contact	Brass	Gold 30µ in. minimum
Insulation	PTFE	
Body	Brass	Nickel 100µ in. minimum
Coupling Nut	Brass	Nickel 100 µin minimum
Crimp Sleeve	Brass	Nickel

Environmental Specifications

Temperature

Operating Range	-65 to +165 deg C

Compliance Certifications (see product page for current document)

Plotted and Other Data

Notes:

Fairview Microwave
301 Leora Ln., Suite 100
Lewisville, TX 75056
Tel: 1-800-715-4396 / (972) 649-6678
Fax: (972) 649-6689
www.fairviewmicrowave.com
sales@fairviewmicrowave.com

Copyright © 2018

chanhvinh.com

Fairview Microwave
RF COMPONENTS ON DEMAND. Done!

SC6023
DATA SHEET

BNC Male Connector Crimp/Solder Attachment For RG55, RG142 Cable from Fairview Microwave is in-stock and available to ship same-day. All of our RF/microwave products are available off-the-shelf from our ISO 9001:2008 certified facilities in Allen, Texas. Fairview Microwave is RF on-demand.

For additional information on this product, please click the following link: BNC Male Connector Crimp/Solder Attachment For RG55, RG142 Cable SC6023

URL: https://www.fairviewmicrowave.com/bnc-male-standard-rg55-rg142-connector-sc6023-p.aspx

The information contained in this document is accurate to the best of our knowledge and representative of the part described herein. It may be necessary to make modifications to the part and/or the documentation of the part, in order to implement improvements. Fairview Microwave reserves the right to make such changes as required. Unless otherwise stated, all specifications are nominal. Fairview Microwave does not make any representation or warranty regarding the suitability of the part described herein for any particular purpose, and Fairview Microwave does not assume any liability arising out of the use of any part or documentation.

301 Leora Ln., Suite 100, Lewisville, TX 75056 | Tel: 1-800-715-4396 / (972) 649-6678 / Fax: (972) 649-6689

chanhvinh.com

Fairview Microwave
RF COMPONENTS ON DEMAND. Done!

SC6023
DATA SHEET

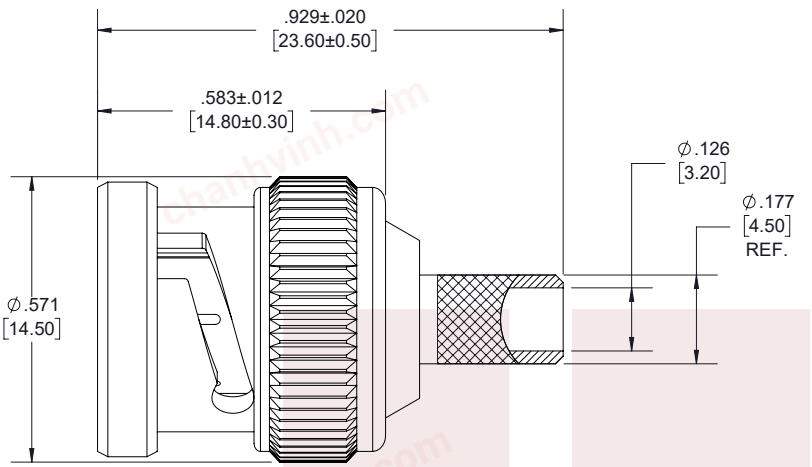

BNC MALE

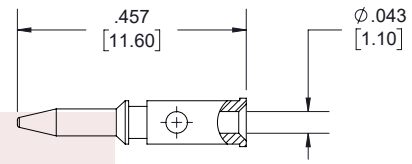

CONTACT

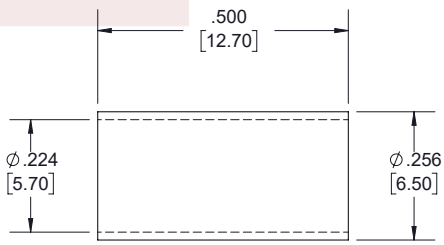

FERRULE

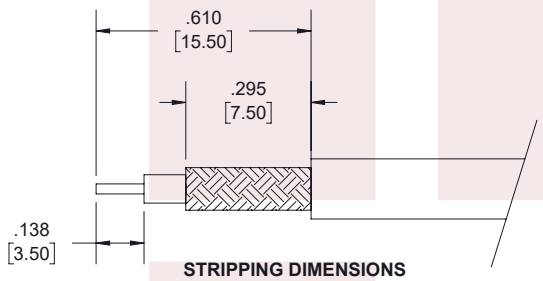

STRIPPING DIMENSIONS

NOTES:
1. CABLE ATTACHMENT:
   - OUTER: CRIMP.
   - INNER: SOLDER/CRIMP.
2. CRIMP SIZE REQUIRED:
   - FERRULE: .221 [5.60] HEX. CRIMP TOOL.
   - CONTACT: .071 [1.80] HEX. CRIMP TOOL.

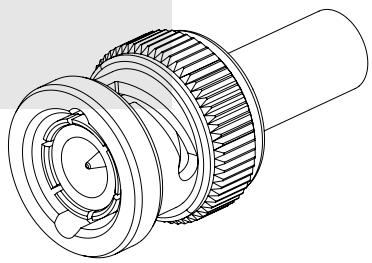

STANDARD TOLERANCES	
.X	±0.2
.XX	±0.01
.XXX	±0.005

*STANDARD TOLERANCES APPLY ONLY TO DIMENSIONS IN INCHES

Fairview Microwave
RF COMPONENTS ON DEMAND. Done!

NOTES:
1. UNLESS OTHERWISE SPECIFIED ALL DIMENSIONS ARE NOMINAL.
2. ALL SPECIFICATIONS ARE SUBJECT TO CHANGE WITHOUT NOTICE AT ANY TIME.
3. DIMENSIONS ARE IN INCHES [mm].

TITLE	DWG NO	CAGE CODE
BNC Male Connector Crimp/Solder Attachment For RG55, RG142 Cable	SC6023	3FKR5

CAD FILE	11/07/18	SHEET	1 OF 1	SCALE	N/A	SIZE	A	7361

301 Leora Ln., Suite 100, Lewisville, TX 75056 | Tel: 1-800-715-4396 / (972) 649-6678 / Fax: (972) 649-6689

Copyright © 2018