U.49P5 | U.49P - CLAMPS FOR INSIDE GRIP



Description :

• High impact and screwing / unscrewing resistance. • Multiple flexible blades and hardly sensitive to distortion. • Easy to use.

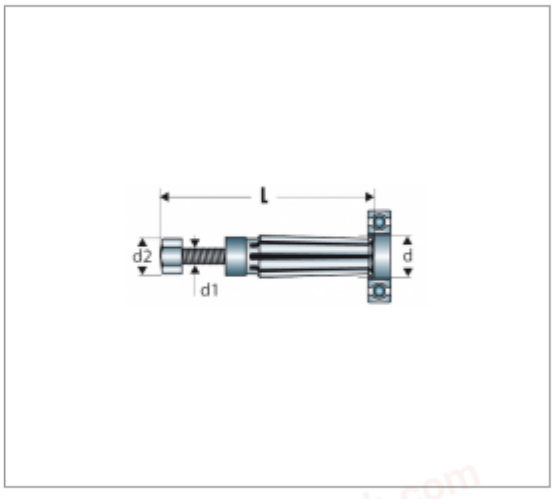

Informations :

	U.49P5
d mini [mm]	18
d maxi [mm]	22,5
d mini - maxi [mm]	18,0 - 22,5
d1 [mm]	1/2"
d2 [mm]	17
L maxi [mm]	112
L [mm]	112
[g]	140

© FACOM 2019