chanhvinh.com

U.49P4 | U.49P - CLAMPS FOR INSIDE GRIP



Description :

• High impact and screwing / unscrewing resistance. • Multiple flexible blades and hardly sensitive to distortion. • Easy to use.

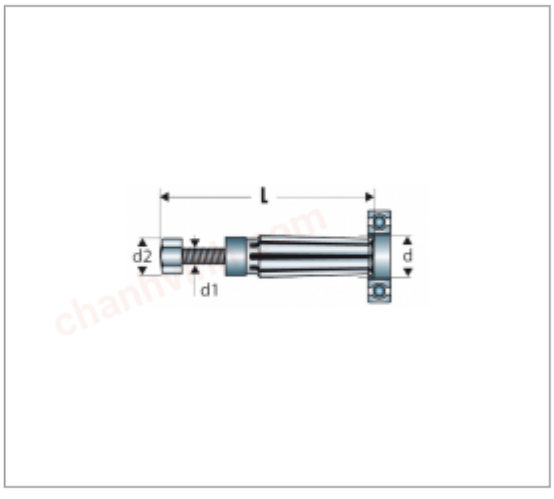

Informations :

	U.49P4
d mini [mm]	13
d maxi [mm]	18
d mini - maxi [mm]	13,0 - 18,0
d1 [mm]	M8
d2 [mm]	12
L maxi [mm]	100
L [mm]	100
[g]	70

© FACOM 2019