chanhvinh.com

U.49P1 | U.49P - CLAMPS FOR INSIDE GRIP



Description :

• High impact and screwing / unscrewing resistance. • Multiple flexible blades and hardly sensitive to distortion. • Easy to use.

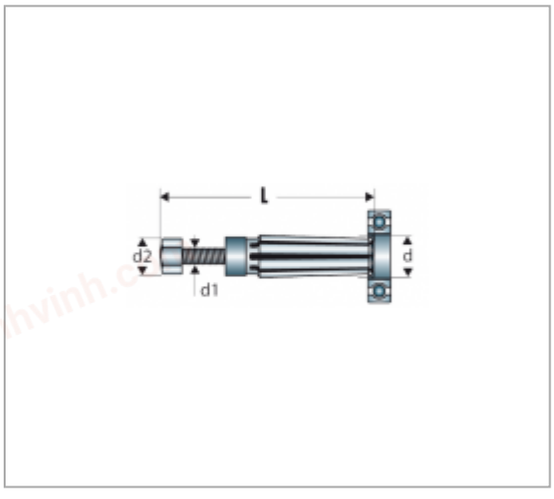

Informations :

	U.49P1
d mini [mm]	6,5
d maxi [mm]	8
d mini - maxi [mm]	6,5 - 8,0
d1 [mm]	M8
d2 [mm]	12
L maxi [mm]	76
L [mm]	76
[g]	25

© FACOM 2019