Richco Plastic Snap-action Rivets

- Suitable for a wide range of light-duty fixing applications
- Two-part construction, re-useable, and require no fixing tools
- Various sizes available to cover a panel thickness/gripping range of 1 to 8·5mm
- Made from nylon 6, available in Black or White
- Working temperature range -40°C to +85°C

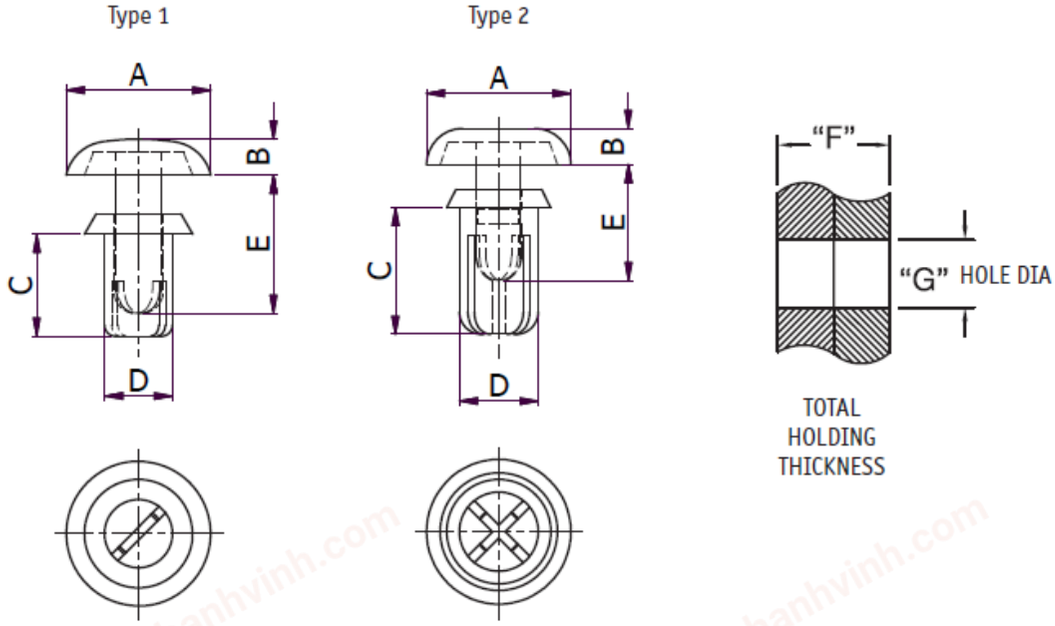

Comparison Table

Colour	Fixing Hole Dia. (mm)	Grip Range (mm)	A (mm)	B (mm)	C (mm)	D (mm)	E (mm)	Stock no.
Black	2.6-2.7	1.0-2.0	5.0	1.4	3.2	2.6	4.5	255-9920
Black	2.6-2.7	2.1-3.0	5.0	1.4	4.2	2.6	4.5	255-9936
Black	2.6-2.7	2.7-3.6	5.0	1.4	4.8	2.6	6.1	255-9942
Black	2.6-2.7	3.4-4.3	5.0	1.4	5.5	2.6	6.1	280-789
Black	3.1-3.2	1.0-2.0	6.4	1.6	3.5	3.0	5.1	255-9958
Black	3.1-3.2	2.0-3.0	6.4	1.6	4.5	3.0	6.1	280-795
Black	4.0-4.1	3.5-4.5	6.4	1.6	5.5	3.0	6.1	280-802
Black	3.1-3.2	4.0-5.0	6.4	1.6	6.5	3.0	7.1	280-818
Black	3.1-3.2	5.0-6.0	6.4	1.6	8.0	3.0	9.0	280-824
Black	3.6-3.7	1.2-2.1	6.4	1.6	3.5	3.5	5.1	255-9964
Black	3.6-3.7	2.2-3.1	6.4	1.6	4.5	3.5	6.1	280-830
Black	3.6-3.7	2.7-3.6	6.4	1.6	5.0	3.5	6.1	255-9970
Black	3.6-3.7	3.2-4.1	6.4	1.6	5.5	3.5	7.1	280-846
Black	3.6-3.7	4.5-5.5	6.4	1.6	7.0	3.5	9.0	255-9986
Black	4.0-4.1	2.5-3.5	8.0	1.8	5.0	4.0	7.0	256-0431

Black	4.0-4.1	3.5-4.5	8.0	1.8	6.0	4.0	7.0	280-852
Black	4.0-4.1	4.5-5.5	8.0	1.8	7.0	4.0	9.0	280-868
Black	4.0-4.1	5.5-5.6	8.0	1.8	8.0	4.0	9.0	280-874
Black	4.0-4.1	7.5-8.5	8.0	1.8	10.0	4.0	11.0	255-9992
White	2.6-2.7	1.0-2.0	5.0	1.4	3.2	2.6	4.5	256-0009
White	2.6-2.7	2.1-3.0	5.0	1.4	4.2	2.6	4.5	256-0021
White	2.6-2.7	2.7-3.6	5.0	1.4	4.8	2.6	6.1	256-0037
White	2.6-2.7	3.4-4.3	5.0	1.4	5.5	2.6	6.1	280-880
White	3.1-3.2	1.0-2.0	6.4	1.6	3.5	3.0	5.1	256-0043
White	3.1-3.2	2.0-3.0	6.4	1.6	4.5	3.0	6.1	280-896
White	3.1-3.2	3.0-4.0	6.4	1.6	5.5	3.0	6.1	280-903
White	3.1-3.2	4.0-5.0	6.4	1.6	6.5	3.0	7.1	280-919
White	3.1-3.2	5.0-6.0	6.4	1.6	8.0	3.0	9.0	280-925
White	3.6-3.7	2.2-3.1	6.4	1.6	4.5	3.5	6.1	280-931
White	3.6-3.7	2.7-3.6	6.4	1.6	5.0	3.5	6.1	256-0065
White	3.6-3.7	3.2-4.1	6.4	1.6	5.5	3.5	7.1	280-947
White	3.6-3.7	4.5-5.5	6.4	1.6	7.0	3.5	9.0	256-0071
White	4.0-4.1	2.5-3.5	8.0	1.8	5.0	4.0	7.0	256-0087
White	4.0-4.1	3.5-4.5	8.0	1.8	6.0	4.0	7.0	280-953
White	4.0-4.1	4.5-5.5	8.0	1.8	7.0	4.0	9.0	280-969
White	4.0-4.1	5.5-6.5	8.0	1.8	8.0	4.0	9.0	280-975
White	4.0-4.1	7.5-8.5	8.0	1.8	10.0	4.0	11.0	256-0093

chanhvinh.com