chanhvinh.com

Aluminum electrolytic capacitors

Hybrid polymer aluminum electrolytic capacitors, compact, high ripple current – 125 °C

Series/Type: **B40920**

Date: June 2025

© TDK Electronics AG 2025. Reproduction, publication and dissemination of this publication, enclosures hereto and the information contained therein without TDK Electronics' prior express consent is prohibited.

chanhvinh.com

SMD capacitors

Long-life grade capacitors



Applications

- Automotive electronics
- Industrial electronics

Features

- Miniaturized dimensions
- Useful life, 4000 h at 125 °C
- Compact design
- Very high ripple current capability
- Low ESR across temperature range
- Standard and vibration resistant designs available
- Suitable for reflow soldering
- RoHS-compatible

Construction

- Surface mount type
- Coated aluminum case
- Minus pole marking on the case
- Case with pressure relief vent

Delivery mode

- Taped on reel

chanhvinh.com

Specifications and characteristics in brief

Rated voltage V_R Surge voltage V_S	25 ... 35 V DC 1.15 · V_R		
Rated capacitance C_R Capacitance tolerance	330 ... 820 µF ±20% ≙ M		
Dissipation factor tan δ	V_R (V DC)	25	35
(20 °C, 120 Hz)	tan δ (max.)	0.14	0.12
Leakage current I_{leak} (20 °C, 2 min)	$I_{leak} \leq 0.01\ \mu A \cdot \left(\frac{C_R}{\mu F} \cdot \frac{V_R}{V}\right)$ or 3 µA, whichever is greater		
Useful life[1] 125 °C; V_R; $I_{AC,R}$	> 4000 h	Requirements: |ΔC/C| ESR I_{leak}	 ≤ 30% of initial value ≤ 2 times initial specified limit[2] ≤ initial specified limit
Voltage endurance test 125 °C; V_R	1000 h	Post test requirements: |ΔC/C| tan δ I_{leak}	 ≤ 15% of initial value ≤ 1.5 times initial specified limit ≤ initial specified limit
Shelf life[3] 125 °C, 0 V	1000 h	Requirements: |ΔC/C| tan δ I_{leak}	 ≤ 30% of initial value ≤ 2 times initial specified limit ≤ initial specified limit
Biased humidity test 85 °C, 85% RH, V_R	2000 h	Requirements: |ΔC/C| tan δ I_{leak}	 ≤ 30% of initial value ≤ 2 times initial specified limit ≤ initial specified limit
Vibration resistance test	To AEC-Q200 REV E (MIL-STD-202, Method 204): Frequency range 10 Hz ... 2 kHz, displacement amplitude max. 1.5 mm, duration 3 x 20 min, 12 cycles. Capacitor soldered on standard TDK PCB. Standard design: acceleration max. 5 *g* Vibration resistant design: acceleration max. 30 *g*		
IEC climatic category	To IEC 60068-1:2013: 55/125/56 (–55 °C/+125 °C/56 days damp heat test)		
Reference standard	AEC-Q200 REV E[4]		

1) Refer to chapter “General technical information, 5 Useful life” on how to interpret useful life.

2) ESR_{max} at 100 kHz, 20 °C

3) Before the measurement, the capacitor shall be preconditioned by the application of the rated voltage for 1 hour. The voltage shall be applied to the capacitor through a resistor, the value of which shall be approximately 100 Ω.

4) Refer to chapter “General technical information, 2 Standards and specifications” for further details.

chanhvinh.com

Standard design

Dimensional drawing

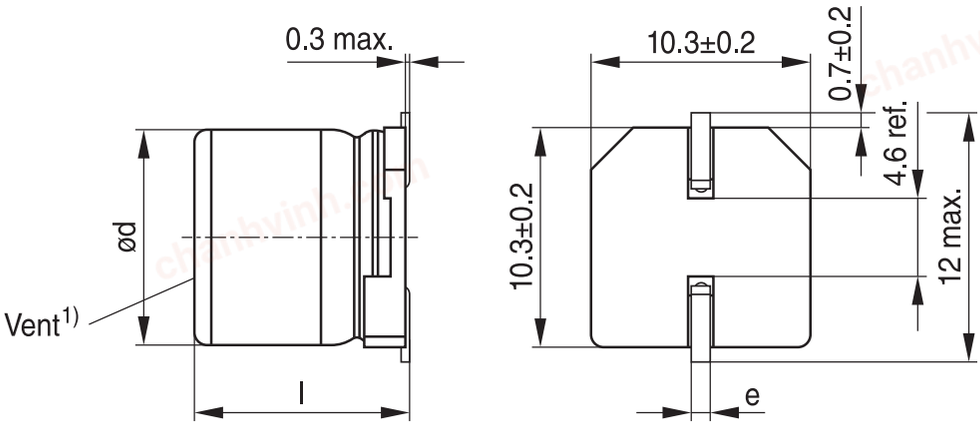

1) Supplied components may have different vent designs. They all offer the same functionality of pressure relief.

KAL1997-G-E

Layout recommendation2)

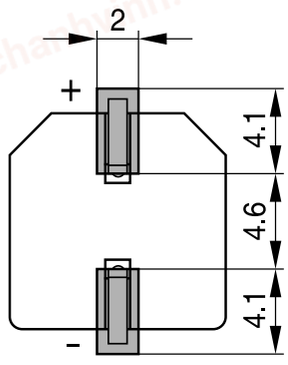

Land space

KAL1778-9-E

2) Different layout can also be used after mounting evaluation.

Dimensions and weights

Dimensions (mm)			Approx. weight
d ±0.5	l ±0.3	e ±0.2	g
10	10.2	0.9	1.4
10	12.5	0.9	1.6
10	16.5	1.2	2.1

chanhvinh.com

Vibration resistant design

Dimensional drawing

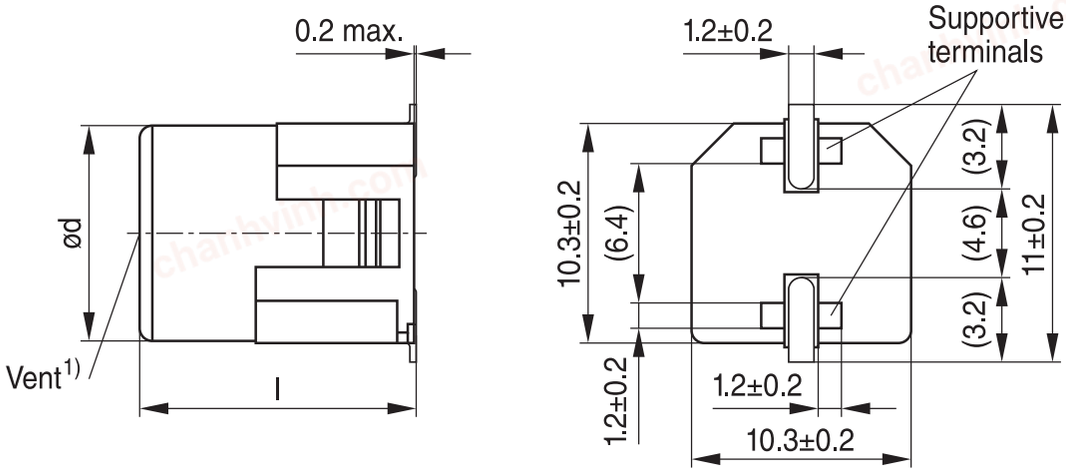

1) Supplied components may have different vent designs. They all offer the same functionality of pressure relief.

( ) Reference value

KAL1979-5-E

Layout recommendation2)

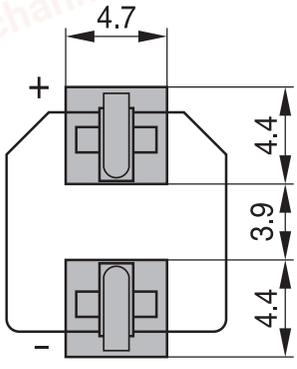

Land space

KAL1980-6-E

Recommended thickness of solder paste: 0.2 mm

2) Different layout can also be used after mounting evaluation.

Dimensions and weights

Dimensions (mm)		Approx. weight
d ±0.5	l ±0.3	g
10	10.5	1.5
10	12.8	1.7
10	16.8	2.2

chanhvinh.com

Overview of available types

Other voltage and capacitance ratings are available upon request.

V_R (V DC)	25	35
	Case dimensions d x l (mm)[1)]	
C_R (µF)		
330		10 x 10.2 | 10 x 10.5
390		10 x 12.5 | 10 x 12.8
430		10 x 12.5 | 10 x 12.8
470	10 x 10.2 | 10 x 10.5	
560	10 x 12.5 | 10 x 12.8	
620	10 x 12.5 | 10 x 12.8	10 x 16.5 | 10 x 16.8
820	10 x 16.5 | 10 x 16.8	

Technical data and ordering codes

C_R 120 Hz 20 °C µF	Case dimensions[1)] d x l mm	ESR_{max} 100 kHz 20 °C Ω	$I_{AC,R}$ 100 kHz 125 °C A	Ordering code (composition see below)
V_R = 25 V DC				
470	10 x 10.2 | 10 x 10.5	0.020	2.8	B40920A5477M***
560	10 x 12.5 | 10 x 12.8	0.018	3.2	B40920A5567M***
620	10 x 12.5 | 10 x 12.8	0.018	3.2	B40920A5627M***
820	10 x 16.5 | 10 x 16.8	0.013	4.2	B40920A5827M***
V_R = 35 V DC				
330	10 x 10.2 | 10 x 10.5	0.020	2.8	B40920A7337M***
390	10 x 12.5 | 10 x 12.8	0.018	3.2	B40920A7397M***
430	10 x 12.5 | 10 x 12.8	0.018	3.2	B40920A7437M***
620	10 x 16.5 | 10 x 16.8	0.013	4.2	B40920A7627M***

Composition of ordering code

*** = Version
000 = for standard design
100 = for vibration resistant design

1) Case dimensions d x l (mm): Standard design | Vibration resistant design.

chanhvinh.com

Marking

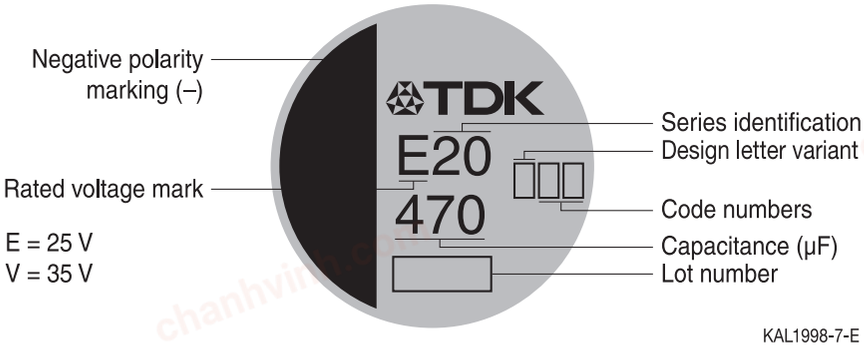

KAL1998-7-E

Package details

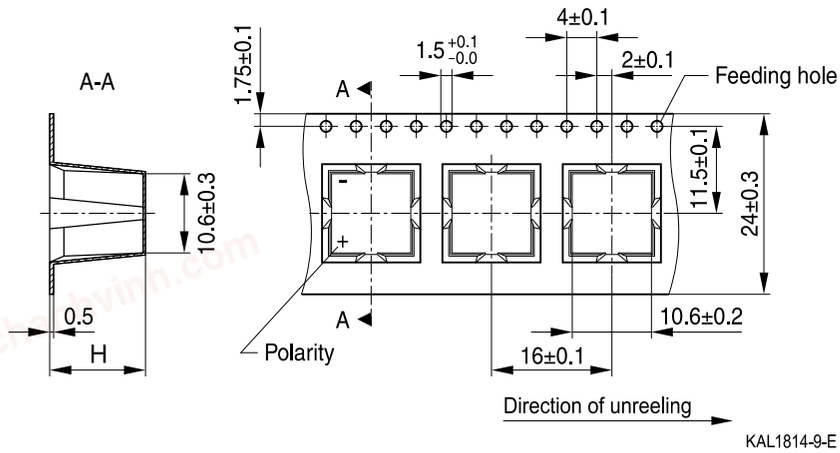

KAL1814-9-E

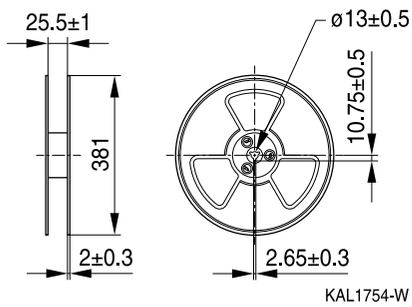

KAL1754-W

The image of the packaging reel is for illustrative purpose only. Supplied reels may have a different appearance.

Dimensions, weights and packing units

Case size d x l (mm)	H ±0.2 (mm)	Parts per reel	Reels per box	Box dimensions (mm)
10 x 10.2 | 10 x 10.5	11.2	500	6	400 x 410 x 250
10 x 12.5 | 10 x 12.8	13.8	400	6	400 x 410 x 250
10 x 16.5 | 10 x 16.8	17.6	250	6	400 x 410 x 250

chanhvinh.com

Soldering profile

Recommended reflow soldering conditions

	Pre-heat	Time maintained ≥ 200 °C	Time maintained ≥ 217 °C	Time maintained ≥ 230 °C	Peak temperature	Time maintained close to peak temperature	Reflow cycles allowed
Condition 1	160 …180 °C 120 s max.	70 s max.	50 s max.	40 s max.	260 °C	≥ 250 °C 5 s max.	1
Condition 2					245 °C	≥ 240 °C 5 s max.	2

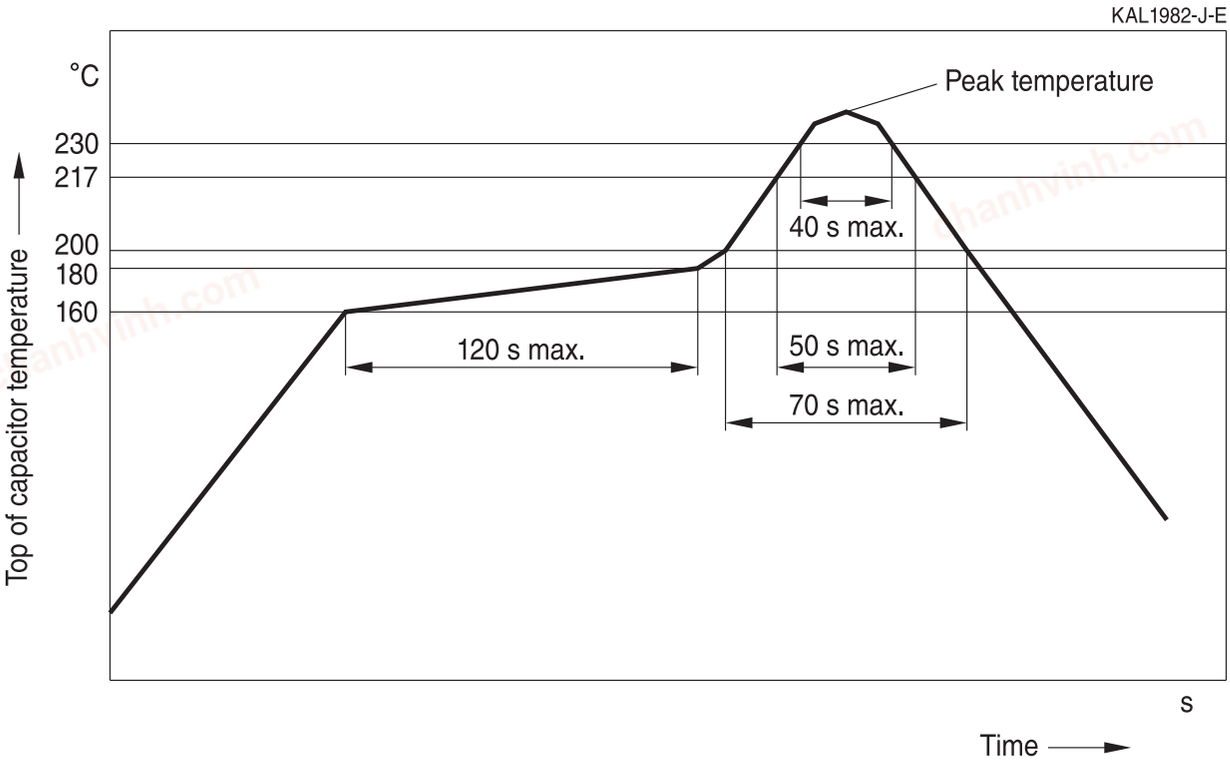

Useful life[1)]

Calculations of useful life are performed on request, based on operational conditions stated by the customer.

1) Refer to chapter "General technical information, 5 Useful life" on how to interpret useful life.

chanhvinh.com

Cautions and warnings

Personal safety

The electrolytes used have been optimized both with a view to the intended application and with regard to health and environmental compatibility. They do not contain any solvents that are detrimental to health, e.g. dimethyl formamide (DMF) or dimethyl acetamide (DMAC). Furthermore, some of the high-voltage electrolytes used are self-extinguishing.

As far as possible, we do not use any dangerous chemicals or compounds to produce operating electrolytes, although in exceptional cases, such materials must be used in order to achieve specific physical and electrical properties because no alternative materials are currently known.
We do, however, restrict the amount of dangerous materials used in our products to an absolute minimum.

Materials and chemicals used in our aluminum electrolytic capacitors are continuously adapted in compliance with the TDK Electronics Corporate Environmental Policy and the latest EU regulations and guidelines such as RoHS, REACH/SVHC, GADSL, and ELV.

MDS (Material Data Sheets) are available on our website for all types listed in the data book.
MDS for customer specific capacitors are available upon request.

Nevertheless, the following rules should be observed when handling aluminum electrolytic capacitors: No electrolyte should come into contact with eyes or skin. If electrolyte does come into contact with the skin, wash the affected areas immediately with running water. If the eyes are affected, rinse them for 10 minutes with plenty of water. If symptoms persist, seek medical treatment. Avoid inhaling electrolyte vapor or mists. Workplaces and other affected areas should be well ventilated. Clothing that has been contaminated by electrolyte must be changed and rinsed in water.

chanhvinh.com

Product safety

The table below summarizes the safety instructions that must be observed without fail. A detailed description can be found in the relevant sections of seperate file chapter "General technical information"

Topic	Safety information	Reference chapter "General technical information"
Polarity	Make sure that polar capacitors are connected with the right polarity.	1 "Basic construction of aluminum electrolytic capacitors"
Reverse voltage	Voltages of opposite polarity should be prevented by connecting a diode.	3.1.6 "Reverse voltage"
Mounting position of capacitors with screw or multi-pin terminals	Multi-pin capacitors with pressure relief vent on the can base must not be mounted with terminals facing up unless otherwise specified.	11.1 "Mounting positions of capacitors with screw or multi-pin terminals"
Robustness of terminals	The following maximum tightening torques must not be exceeded when connecting screw terminals: M5: 2.5 Nm M6: 4.0 Nm	11.2 "Mounting torques"
Mounting of single-ended capacitors	The internal structure of single-ended capacitors might be damaged if excessive force is applied to the lead wires. Avoid any compressive, tensile or flexural stress. Do not move the capacitor after soldering to PC board. Do not pick up the PC board by the soldered capacitor. Do not insert the capacitor on the PC board with a hole space different to the lead space specified.	11.3 "Mounting considerations for single-ended capacitors"
Soldering	Do not exceed the specified time or temperature limits during soldering.	11.5 "Soldering"
Soldering, cleaning agents	Do not allow halogenated hydrocarbons to come into contact with aluminum electrolytic capacitors.	11.6 "Cleaning agents"
Upper category temperature	Do not exceed the upper category temperature.	7.2 "Maximum permissible operating temperature"
Passive flammability	Avoid external energy, e.g. fire.	8.1 "Passive flammability"
Active flammability	Avoid overload of the capacitors.	8.2 "Active flammability"

chanhvinh.com

Topic	Safety information	Reference chapter "General technical information"
Maintenance	Make periodic inspections of the capacitors. Before the inspection, make sure that the power supply is turned off and carefully discharge the capacitors. Do not apply excessive mechanical stress to the capacitor terminals when mounting.	10 "Maintenance"
Storage	Do not store capacitors at high temperatures or high humidity. Capacitors should be stored at +5 to +35 °C and a relative humidity of ≤ 75%.	7.3 "Shelf life and storage conditions"
		Reference chapter "Capacitors with screw terminals"
Breakdown strength of insulating sleeves	Do not damage the insulating sleeve, especially when ring clips are used for mounting.	"Screw terminals – accessories"

Display of ordering codes for TDK Electronics products

The ordering code for one and the same product can be represented differently in data sheets, data books, other publications, on the company website, or in order-related documents such as shipping notes, order confirmations and product labels. The varying representations of the ordering codes are due to different processes employed and do not affect the specifications of the respective products.
Detailed information can be found on the Internet under www.tdk-electronics.tdk.com/orderingcodes.

chanhvinh.com

Symbols and terms

Symbol	English	German
C	Capacitance	Kapazität
C_R	Rated capacitance	Nennkapazität
C_S	Series capacitance	Serienkapazität
$C_{S,T}$	Series capacitance at temperature T	Serienkapazität bei Temperatur T
C_f	Capacitance at frequency f	Kapazität bei Frequenz f
d	Case diameter, nominal dimension	Gehäusedurchmesser, Nennmaß
d_{max}	Maximum case diameter	Maximaler Gehäusedurchmesser
ESL	Self-inductance	Eigeninduktivität
ESR	Equivalent series resistance	Ersatzserienwiderstand
ESR_f	Equivalent series resistance at frequency f	Ersatzserienwiderstand bei Frequenz f
ESR_T	Equivalent series resistance at temperature T	Ersatzserienwiderstand bei Temperatur T
f	Frequency	Frequenz
I	Current	Strom
I_{AC}	Alternating current (ripple current)	Wechselstrom
$I_{AC,RMS}$	Root-mean-square value of alternating current	Wechselstrom, Effektivwert
$I_{AC,f}$	Ripple current at frequency f	Wechselstrom bei Frequenz f
$I_{AC,max}$	Maximum permissible ripple current	Maximal zulässiger Wechselstrom
$I_{AC,R}$	Rated ripple current	Nennwechselstrom
I_{leak}	Leakage current	Reststrom
$I_{leak,op}$	Operating leakage current	Betriebsreststrom
l	Case length, nominal dimension	Gehäuselänge, Nennmaß
l_{max}	Maximum case length (without terminals and mounting stud)	Maximale Gehäuselänge (ohne Anschlüsse und Gewindebolzen)
R	Resistance	Widerstand
R_{ins}	Insulation resistance	Isolationswiderstand
R_{symm}	Balancing resistance	Symmetrierwiderstand
T	Temperature	Temperatur
ΔT	Temperature difference	Temperaturdifferenz
T_A	Ambient temperature	Umgebungstemperatur
T_B	Capacitor base temperature	Temperatur des Gehäusebodens
T_C	Case temperature	Gehäusetemperatur
t	Time	Zeit
Δt	Period	Zeitraum
t_b	Service life (operating hours)	Brauchbarkeitsdauer (Betriebszeit)
V	Voltage	Spannung
V_F	Forming voltage	Formierspannung
V_{op}	Operating voltage	Betriebsspannung
V_R	Rated voltage, DC voltage	Nennspannung, Gleichspannung
V_S	Surge voltage	Spitzenspannung
X_C	Capacitive reactance	Kapazitiver Blindwiderstand

chanhvinh.com

Symbol	English	German
X_L	Inductive reactance	Induktiver Blindwiderstand
Z	Impedance	Scheinwiderstand
Z_T	Impedance at temperature T	Scheinwiderstand bei Temperatur T
tan δ	Dissipation factor	Verlustfaktor
λ	Failure rate	Ausfallrate
ε_0	Absolute permittivity	Elektrische Feldkonstante
ε_r	Relative permittivity	Dielektrizitätszahl
ω	Angular frequency; $2 \cdot \pi \cdot f$	Kreisfrequenz; $2 \cdot \pi \cdot f$

Note:
All dimensions are given in mm.

chanhvinh.com

Important notes

The following applies to all products named in this publication:

1 Some parts of this publication contain **statements about the suitability of our products for certain areas of application**. These statements are based on our knowledge of typical requirements that are often placed on our products in the areas of application concerned. We nevertheless expressly point out **that such statements cannot be regarded as binding statements about the suitability of our products for a particular customer application**. As a rule we are either unfamiliar with individual customer applications or less familiar with them than the customers themselves. For these reasons, it is always ultimately incumbent on the customer to check and decide whether a product with the properties described in the product specification is suitable for use in a particular customer application.

2 We also point out that **in individual cases, a malfunction of electronic components or failure before the end of their usual service life cannot be completely ruled out in the current state of the art, even if they are operated as specified**. In customer applications requiring a very high level of operational safety and especially in customer applications in which the malfunction or failure of an electronic component could endanger human life or health (e.g. in accident prevention or life-saving systems), it must therefore be ensured by means of suitable design of the customer application or other action taken by the customer (e.g. installation of protective circuitry or redundancy) that no injury or damage is sustained by third parties in the event of malfunction or failure of an electronic component.

3 **The warnings, cautions and product-specific notes must be observed**.

4 In order to satisfy certain technical requirements, **some of the products described in this publication may contain substances subject to restrictions in certain jurisdictions (e.g. because they are classed as hazardous)**. Useful information on this will be found in our Material Data Sheets on the Internet (www.tdk-electronics.tdk.com/material). Should you have any more detailed questions, please contact our sales offices.

5 We constantly strive to improve our products. Consequently, **the products described in this publication may change from time to time**. The same is true of the corresponding product specifications. Please check therefore to what extent product descriptions and specifications contained in this publication are still applicable before or when you place an order.
We also **reserve the right to discontinue production and delivery of products**. Consequently, we cannot guarantee that all products named in this publication will always be available. The aforementioned does not apply in the case of individual agreements deviating from the foregoing for customer-specific products.

6 Unless otherwise agreed in individual contracts, **all orders are subject to our General Terms and Conditions of Supply**.

7 **Our manufacturing sites serving the automotive business apply the IATF 16949 standard**. The IATF certifications confirm our compliance with requirements regarding the quality management system in the automotive industry. Referring to customer requirements and customer specific requirements (“CSR”) TDK always has and will continue to have the policy of respecting individual agreements. Even if IATF 16949 may appear to support the acceptance of unilateral requirements, we hereby like to emphasize that **only requirements mutually agreed upon can and will be implemented in our Quality Management System**. For clarification purposes we like to point out that obligations from IATF 16949 shall only become legally binding if individually agreed upon.

chanhvinh.com

Important notes

8 The trade names EPCOS, CarXield, CeraCharge, CeraDiode, CeraLink, CeraPad, CeraPlas, CSMP, CTVS, DeltaCap, DigiSiMic, FilterCap, FormFit, InsuGate, LeaXield, MediPlas, MiniBlue, MiniCell, MKD, MKK, ModCap, MotorCap, PCC, PhaseCap, PhaseCube, PhaseMod, PhiCap, PiezoBrush, PlasmaBrush, PowerHap, PQSine, PQvar, SIFERRIT, SIFI, SIKOREL, SilverCap, SIMDAD, SiMic, SIMID, SineFormer, SIOV, SurfIND, ThermoFuse, WindCap, XieldCap are **trademarks registered or pending** in Europe and in other countries. Further information will be found on the Internet at www.tdk-electronics.tdk.com/trademarks.

Release 2024-02