chanhvinh.com

THIS DRAWING IS A CONTROLLED DOCUMENT.

REVISIONS

P	LTR	DESCRIPTION	DATE	DWN	APVD
	A	First release	18JUN2021	SL	VR

SECTION A-A
SCALE 4:5

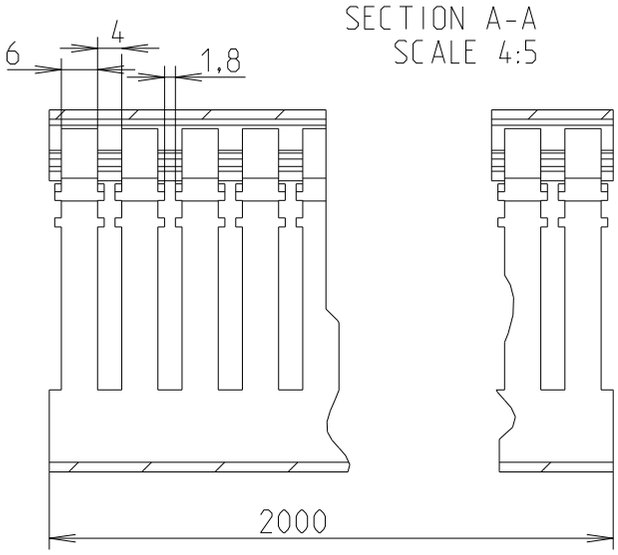

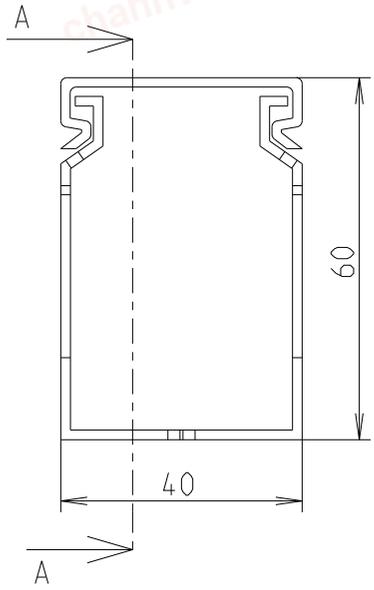

SCALE 1:1

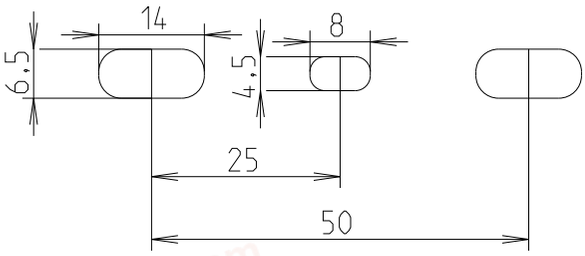

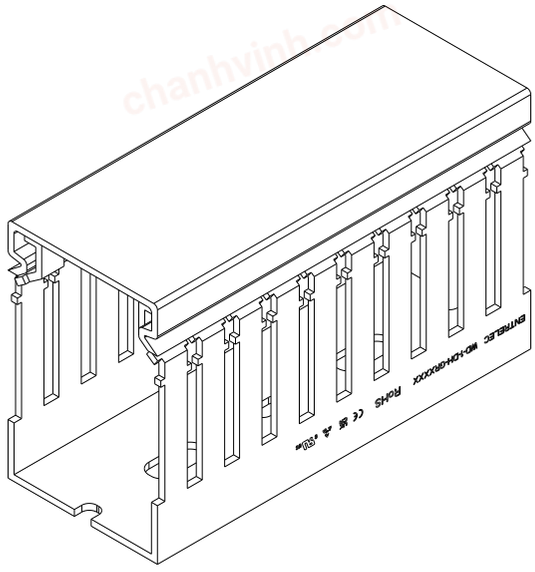

© 2021 TE Connectivity. All Rights Reserved.

1SET411105R0000

PART NO.

DIMENSIONS: mm	DWN 13-Sep-21 03:51:49 PM Deligny, Charlotte	MATERIAL PC-ABS	FINISH -
TOLERANCES UNLESS OTHERWISE SPECIFIED: 0 PLC ±- 1 PLC ±1 2 PLC ±1 3 PLC ±1 4 PLC ±1 ANGLES ±-	CHK 2021-06-18 Seguin, Laurene	TE Connectivity	
	APVD 2021-07-05 Villard, Romain	NAME WD-1-DH-GR4060 -	
	PRODUCT SPEC -	SIZE A4 / CAGE CODE 00779 / DRAWING NO C-1SNP300191-0201	RESTRICTED TO -
	APPLICATION SPEC -		
	WEIGHT -	CUSTOMER DRAWING	SCALE 1:1 / SHEET 1 OF 1 / REV A1