chanhvinh.com

TI01203P/00/EN/10.23-00
71621499
2023-07-11

Technical Information
Cerabar PMP23

Process pressure measurement



Pressure transducer with hygienic, flush mount metal sensors

Application

The Cerabar is a pressure transducer for the measurement of absolute and gauge pressure in gases, vapors, liquids and dust for applications with hygienic requirements. The Cerabar can be used internationally thanks to a wide range of approvals and process connections.

Your benefits

- High reproducibility and long-term stability
- Reference accuracy: up to 0.3%
- Customized measuring ranges
  - Turn down up to 5:1
  - Sensor for measuring ranges up to 40 bar (600 psi)
- Housing and process isolating diaphragm made of 316L
- IP69 protection
- Fully-welded process connections
- Suitable for CIP/SIP cleaning
- Optionally available with IO-Link

Endress+Hauser
People for Process Automation

chanhvinh.com

Table of contents

About this document 4
Document function 4
Symbols used 4
Documentation 4
Terms and abbreviations 6
Turn down calculation 6

Function and system design 7
Measuring principle - process pressure measurement 7
Measuring system 7
Device features 7
Product design 9
System integration 9

Input 10
Measured variable 10
Measuring range 10

Output 12
Output signal 12
Relay switching capacity 12
Signal range 4 to 20 mA 12
Load (for 4 to 20 mA devices) 12
Signal on alarm 4 to 20 mA 13
Dead time, time constant 13
Dynamic behavior 13
Dynamic behavior of switch output 13

Energy supply 14
Terminal assignment 14
Supply voltage 14
Current consumption and alarm signal 14
Power supply fault 14
Electrical connection 15
Cable specification (analog) 15
Residual ripple 15
Influence of power supply 15
Overvoltage protection 15

Performance characteristics of metallic process membrane 16
Reference conditions 16
Uncertainty of measurement for small absolute pressure ranges 16
Influence of orientation 16
Resolution 16
Reference accuracy 16
Thermal change of the zero output and the output span . . . 16
Long-term stability 16
Switch-on time 16

Mounting 17
Installation conditions 17
Influence of orientation 17
Mounting location 17

Environment 19
Ambient temperature range 19
Storage temperature range 19
Climate class 19
Degree of protection 19
Vibration resistance 19
Electromagnetic compatibility 19

Process 20
Process temperature range for devices with metallic process membrane 20
Pressure specifications 20

Mechanical construction 21
Design, dimensions 21
Electrical connection 21
Housing 22
Process connections with flush mount, metal process membrane 23
Materials in contact with process 28
Materials not in contact with process 29
Cleaning 29

Operability 30
IO-Link 30
Plug-on display PHX20 (optional) 30

Certificates and approvals 32
CE mark 32
RoHS 32
RCM marking 32
EAC conformity 32
Approval 32
Safety Instructions (XA) 32
Suitable for hygiene applications 32
Pressure Equipment Directive 2014/68/EU (PED) 32
Manufacturer declarations 33
Other standards and guidelines 33
CRN approval 33
Calibration unit 33
Calibration 34
Inspection certificates 34
Additional approval 34

Ordering information 34
Scope of delivery 34

Accessories 35
Weld-in adapter 35
Process adapter M24 35
Flush mount pipe connections M24 35
Plug-on display PHX20 36
M12 plug-in jack 36

Documentation 38
Field of activities 38
Technical Information 38

chanhvinh.com

Safety Instructions (XA) 38

Registered trademarks 38

chanhvinh.com
chanhvinh.com
chanhvinh.com
chanhvinh.com
chanhvinh.com
chanhvinh.com

chanhvinh.com

About this document

Document function

The document contains all the technical data on the device and provides an overview of the accessories and other products that can be ordered for the device.

Symbols used

Safety symbols

DANGER

This symbol alerts you to a dangerous situation. Failure to avoid this situation will result in serious or fatal injury.

WARNING

This symbol alerts you to a dangerous situation. Failure to avoid this situation can result in serious or fatal injury.

CAUTION

This symbol alerts you to a dangerous situation. Failure to avoid this situation can result in minor or medium injury.

NOTICE

This symbol contains information on procedures and other facts which do not result in personal injury.

Electrical symbols

⊜ Protective earth (PE)
Ground terminals, which must be grounded prior to establishing any other connections. The ground terminals are located on the inside and outside of the device.

⏚ Ground connection
Grounded clamp, which is grounded via a grounding system.

Symbols for certain types of information

✓ Permitted
Procedures, processes or actions that are permitted.

✗ Forbidden
Procedures, processes or actions that are forbidden.

Tip
Indicates additional information

Reference to documentation

1., 2., 3. Series of steps

Reference to page:

Result of an individual step:

Symbols in graphics

A, B, C ... View

1, 2, 3 ... Item numbers

1., 2., 3. Series of steps

Documentation

The following document types are available in the Downloads area of the Endress+Hauser website (www.endress.com/downloads):

For an overview of the scope of the associated Technical Documentation, refer to the following:
- *Device Viewer* (www.endress.com/deviceviewer): Enter the serial number from the nameplate
- *Endress+Hauser Operations app*: Enter serial number from nameplate or scan matrix code on nameplate.

chanhvinh.com

Brief Operating Instructions (KA)

Guide that takes you quickly to the 1st measured value
The Brief Operating Instructions contain all the essential information from incoming acceptance to initial commissioning.

Operating Instructions (BA)

Your reference guide
These Operating Instructions contain all the information that is required in various phases of the life cycle of the device: from product identification, incoming acceptance and storage, to mounting, connection, operation and commissioning through to troubleshooting, maintenance and disposal.

Safety Instructions (XA)

Safety Instructions (XA) are supplied with the device depending on the approval. The Safety Instructions are an integral part of the Operating Instructions.

The nameplate indicates which Safety Instructions (XA) apply to the device in question.

chanhvinh.com

Terms and abbreviations

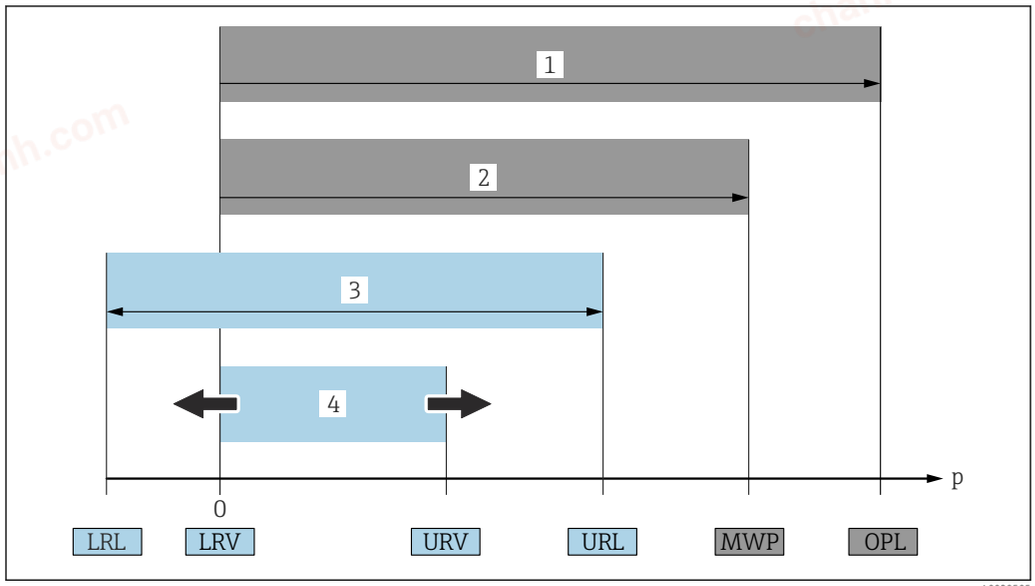

1 OPL: The OPL (over pressure limit = sensor overload limit) for the measuring device depends on the lowest-rated element, with regard to pressure, of the selected components, i.e. the process connection has to be taken into consideration in addition to the measuring cell. Observe pressure-temperature dependency. The OPL may only be applied for a short period of time.

2 MWP: The MWP (maximum working pressure) for the sensors depends on the lowest-rated element, with regard to pressure, of the selected components, i.e. the process connection has to be taken into consideration in addition to the measuring cell. Observe pressure-temperature dependency. The maximum working pressure may be applied at the device for an unlimited period. The MWP can be found on the nameplate.

3 The maximum sensor measuring range corresponds to the span between the LRL and URL. This sensor measuring range is equivalent to the maximum calibratable/adjustable span.

4 The calibrated/adjusted span corresponds to the span between the LRV and URV. Factory setting: 0 to URL. Other calibrated spans can be ordered as customized spans.

p Pressure

LRL Lower range limit

URL Upper range limit

LRV Lower range value

URV Upper range value

TD Turn down. Example - see the following section.

The turn down is preset at the factory and cannot be changed.

Turn down calculation

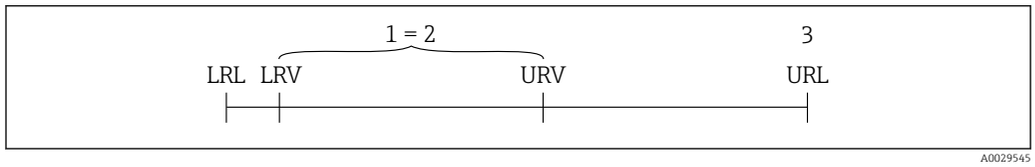

1 Calibrated/adjusted span

2 Zero point-based span

3 Upper range limit

Example:

- Measuring cell: 10 bar (150 psi)
- Upper range limit (URL) = 10 bar (150 psi)
- Calibrated/adjusted span: 0 to 5 bar (0 to 75 psi)
- Lower range value (LRV) = 0 bar (0 psi)
- Upper range value (URV) = 5 bar (75 psi)

$$TD = \frac{URL}{|URV - LRV|}$$

In this example, the TD is 2:1. This span is based on the zero point.

chanhvinh.com

Function and system design

Measuring principle - process pressure measurement

Devices with metallic process isolating diaphragm

The process pressure deflects the metal process isolating diaphragm of the sensor and a fill fluid transfers the pressure to a Wheatstone bridge (semiconductor technology). The pressure-dependent change in the bridge output voltage is measured and evaluated.

Advantages:

- Can be used for high process pressures
- Fully welded sensor
- Slim, flush-mounted process connections available

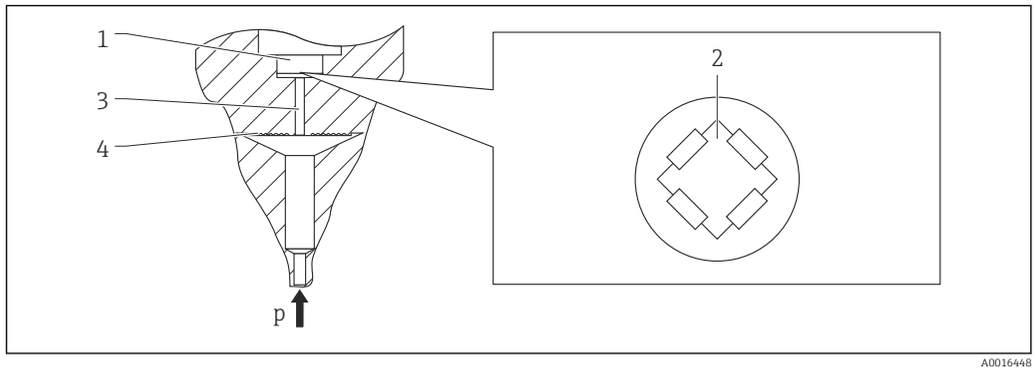

A0016448

1 *Silicon measuring element, substrate*
2 *Wheatstone bridge*
3 *Channel with fill fluid*
4 *Metal process isolating diaphragm*

Measuring system

A complete measuring system comprises:

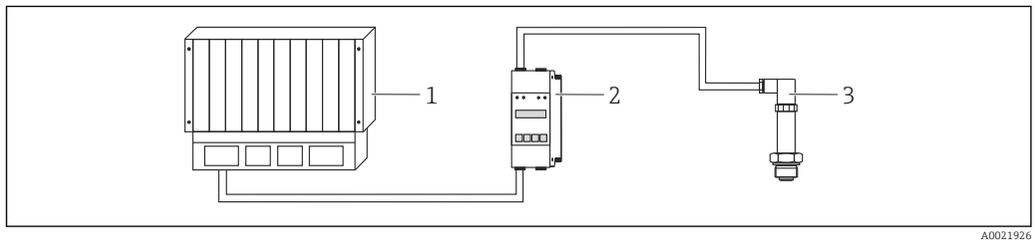

A0021926

1 *PLC (programmable logic controller)*
2 *E.g., RN221N/RMA42 (if required)*
3 *Pressure transducer*

Device features

Field of application

Gauge and absolute pressure and hygienic applications

Process connections

- Thread ISO 228
- Clamp/Tri-Clamp
- DIN 11851
- Thread M24 x 1.5
- Universal adapter
- SMS
- Varivent

Measuring ranges

From −400 to +400 mbar (−6 to +6 psi) to −1 to +40 bar (−15 to +600 psi)

OPL (depends on the measuring range)

Max. 0 to +160 bar (0 to +2 400 psi)

chanhvinh.com

MWP

Max. 0 to +160 bar (0 to +2 400 psi)

Process temperature range (temperature at process connection)

−10 to +100 °C (+14 to +212 °F)
(+135 °C (+275 °F) for one hour maximum)

Ambient temperature range

- −40 to +85 °C (−40 to +185 °F)
- Devices for hazardous areas: −40 to +70 °C (−40 to +158 °F)
- With IO-Link: −40 to +70 °C (−40 to +158 °F)

Reference accuracy

Up to 0.3 %, TD 5:1

Supply voltage

10 to 30 V_{DC}

IO-Link communication is guaranteed only if the supply voltage is at least 18 V.

Output

4 to 20 mA

Devices with IO-Link:
C/Q output for communication (SIO mode (switch output))

Material

PMP23:
- Housing made of 316L (1.4404)
- Process connections made of 316L (1.4435)
- Process membrane made of 316L (1.4435)

Options

PMP23:
- Hazardous area approvals
- Min. alarm current setting
- 3.1 Material certificates
- EHEDG/3A approvals
- Calibration certificate
- Weld-in adapter
- IP69
- IO-Link

chanhvinh.com

Overview	Item	Description
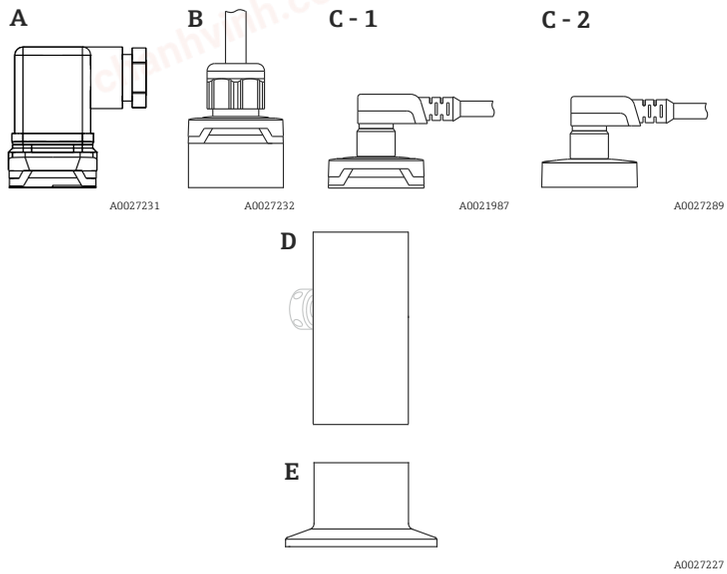	A	Valve plug
	B	Cable
	C- 1	M12 plug Housing cap made of plastic
	C- 2	M12 plug IP69: metal housing cap Metal housing cap can also be ordered as an option.
	D E	Housing Process connection (sample illustration)

System integration

The device can be given a tag name (max. 32 alphanumeric characters).

Name	Option [1]
Measuring point (TAG), see additional specifications	Z1

1) Product Configurator, order code for "Marking"

For devices with IO-Link, an IO-DD is available in the Downloads area of the Endress+Hauser website → 30.

chanhvinh.com

Input

Measured variable

Measured process variable

Gauge pressure or absolute pressure

Calculated process variable

Pressure

Measuring range

Metallic process membrane

Devices with gauge pressure measurement

Sensor	Device	Maximum sensor measuring range		Smallest calibratable span [1]	MWP	OPL	Factory settings [2]	Option [3]
		lower (LRL)	upper (URL)					
		[bar (psi)]	[bar (psi)]	[bar (psi)]	[bar (psi)]	[bar (psi)]		
400 mbar (6 psi) [4]	PMP23	−0.4 (−6)	+0.4 (+6)	0.4 (6)	1 (15)	1.6 (24)	0 to 400 mbar (0 to 6 psi)	1F
1 bar (15 psi) [4]	PMP23	−1 (−15)	+1 (+15)	0.4 (6)	2.7 (40.5)	4 (60)	0 to 1 bar (0 to 15 psi)	1H
2 bar (30 psi) [4]	PMP23	−1 (−15)	+2 (+30)	0.4 (6)	6.7 (100.5)	10 (150)	0 to 2 bar (0 to 30 psi)	1K
4 bar (60 psi) [4]	PMP23	−1 (−15)	+4 (+60)	0.8 (12)	10.7 (160.5)	16 (240)	0 to 4 bar (0 to 60 psi)	1M
6 bar (90 psi) [4]	PMP23	−1 (−15)	+6 (+90)	2.4 (36)	16 (240)	24 (360)	0 to 6 bar (0 to 90 psi)	1N
10 bar (150 psi) [4]	PMP23	−1 (−15)	+10 (+150)	2 (30)	25 (375)	40 (600)	0 to 10 bar (0 to 150 psi)	1P
16 bar (240 psi) [4]	PMP23	−1 (−15)	+16 (+240)	5 (75)	25 (375)	64 (960)	0 to 16 bar (0 to 240 psi)	1Q
25 bar (375 psi) [4]	PMP23	−1 (−15)	+25 (+375)	5 (75)	25 (375)	100 (1500)	0 to 25 bar (0 to 375 psi)	1R
40 bar (600 psi) [4]	PMP23	−1 (−15)	+40 (+600)	8 (120)	100 (1500)	160 (2400)	0 to 40 bar (0 to 600 psi)	1S

1) Highest turn down that can be set at the factory: 5:1. The turn down is preset and cannot be changed.
2) Other measuring ranges (e.g. −1 to +5 bar (−15 to 75 psi)) can be ordered with customer-specific settings (see the Product Configurator, order code for "Calibration; Unit" option "J"). It is possible to invert the output signal (LRV = 20 mA; URV = 4 mA). Prerequisite: URV < LRV
3) Product Configurator, order code for "Sensor range"
4) Vacuum resistance: 0.01 bar (0.145 psi) abs.

Devices with absolute pressure measurement

Sensor	Device	Maximum sensor measuring range		Smallest calibratable span [1]	MWP	OPL	Factory settings [2]	Option [3]
		lower (LRL)	upper (URL)					
		[bar (psi)]	[bar (psi)]	[bar (psi)]	[bar (psi)]	[bar (psi)]		
400 mbar (6 psi)	PMP23	0 (0)	0.4 (+6)	0.4 (6)	1 (15)	1.6 (24)	0 to 400 mbar (0 to 6 psi)	2F
1 bar (15 psi)	PMP23	0 (0)	1 (+15)	0.4 (6)	2.7 (40.5)	4 (60)	0 to 1 bar (0 to 15 psi)	2H
2 bar (30 psi)	PMP23	0 (0)	2 (+30)	0.4 (6)	6.7 (100.5)	10 (150)	0 to 2 bar (0 to 30 psi)	2K
4 bar (60 psi)	PMP23	0 (0)	4 (+60)	0.8 (12)	10.7 (160.5)	16 (240)	0 to 4 bar (0 to 60 psi)	2M
10 bar (150 psi)	PMP23	0 (0)	10 (+150)	2 (30)	25 (375)	40 (600)	0 to 10 bar (0 to 150 psi)	2P
40 bar (600 psi)	PMP23	0 (0)	+40 (+600)	8 (120)	100 (1500)	160 (2400)	0 to 40 bar (0 to 600 psi)	2S

1) Highest turn down that can be set at the factory: 5:1. The turn down is preset and cannot be changed.
2) Other measuring ranges (e.g. −1 to +5 bar (−15 to 75 psi)) can be ordered with customer-specific settings (see the Product Configurator, order code for "Calibration; Unit" option "J"). It is possible to invert the output signal (LRV = 20 mA; URV = 4 mA). Prerequisite: URV < LRV
3) Product Configurator, order code for "Sensor range"

chanhvinh.com

Maximum turn down which can be ordered for absolute pressure and gauge pressure sensors

Device	Range	400 mbar (6 psi)	1 bar (15 psi) 6 bar (90 psi) 16 bar (240 psi)	2 bar (30 psi) 4 bar (60 psi) 10 bar (150 psi) 25 to 40 bar (375 to 600 psi)
PMP23	0.3%	TD 1:1	TD 1:1 to TD 2.5:1	TD 1:1 to TD 5:1

chanhvinh.com

Output

Output signal

Name	Option [1]
4 to 20 mA (2-wire)	1
IO-Link: 4 to 20 mA (3-wire or 4-wire)	7
IO-Link (SSP Ed. 2 V1.1), 4 to 20 mA	A

1) Product Configurator, order code for "Output"

Relay switching capacity

- Devices with IO-Link: Switch state ON: $I_a \leq 200$ mA [1]; Switch state OFF: $I_a \leq 1$ mA
- Switch cycles: >10,000,000
- Voltage drop PNP: ≤2 V
- Overload protection: Automatic load testing of switching current;
  - Max. capacitance load: 14 µF at max. supply voltage (without resistive load)
  - Devices with IO-Link: Max. capacitance load: 1 µF at max. supply voltage (without resistive load)
  - Max. cycle duration: 0.5 s; min. t_{on}: 4 ms
  - Max. cycle duration: 0.5 s; min. t_{on}: 40 µs
  - Periodic disconnection from protective circuit in the event of overcurrent (f = 2 Hz) and "F804" displayed

Signal range 4 to 20 mA

3.8 to 20.5 mA

Load (for 4 to 20 mA devices)

In order to guarantee sufficient terminal voltage in two-wire devices, a maximum load resistance R_L (including line resistance) must not be exceeded depending on the supply voltage U_B of the supply unit.

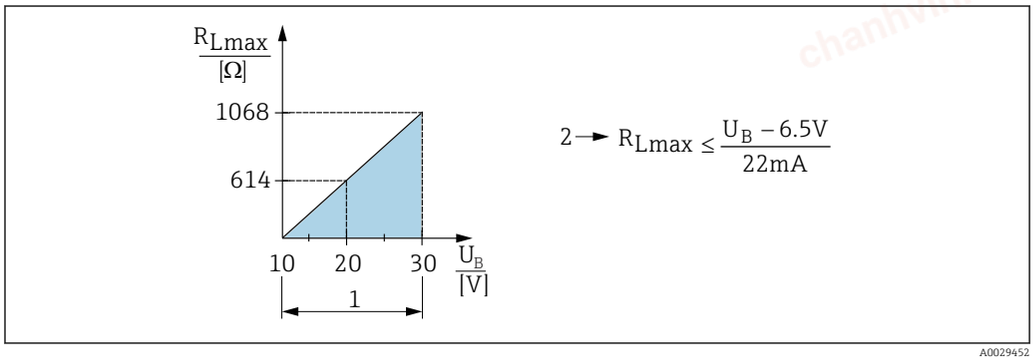

A0029452

1 Power supply 10 to 30 V DC
2 R_{Lmax} maximum load resistance
U_B Supply voltage

Devices with IO-Link

In order to guarantee sufficient terminal voltage, a maximum load resistance R_L (including line resistance) must not be exceeded depending on the supply voltage U_B of the supply unit.

1) Deviating from the IO-Link standard, larger currents are supported.

chanhvinh.com

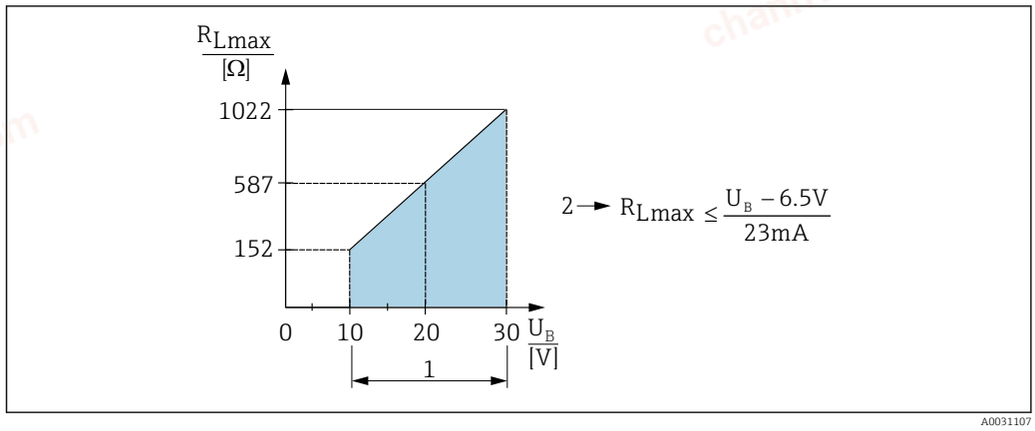

A0031107

1 Power supply 10 to 30 V DC
2 R_{Lmax} maximum load resistance
U_B Supply voltage

If load is too great:
- Failure current is indicated and "S803" displayed (indication: MIN alarm current)
- Periodic checking to establish if it is possible to quit fault state
- In order to guarantee sufficient terminal voltage, a maximum load resistance RL (including line resistance) must not be exceeded depending on the supply voltage UB of the supply unit.

Signal on alarm 4 to 20 mA

The response of the output to error is regulated in accordance with NAMUR NE 43.

Factory setting MAX alarm: >21 mA

Alarm current

Name	Option
Min. alarm current set	IA [1]

1) Product Configurator, order code for "Service"

Dead time, time constant

Presentation of the dead time and the time constant:

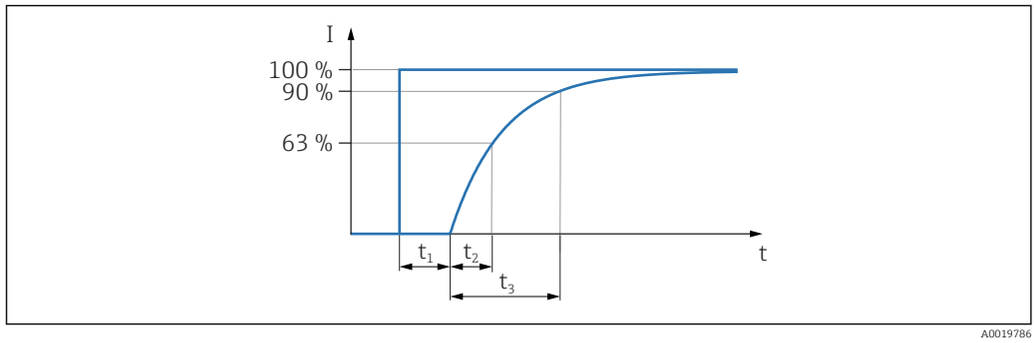

A0019786

Dynamic behavior

Dead time (t_1) [ms]	Time constant (T63), t_2 [ms]	Time constant (T90), t_3 [ms]
6 ms	10 ms	15 ms

Devices with IO-Link:

Dead time (t_1) [ms]	Time constant (T63), t_2 [ms]	Time constant (T90), t_3 [ms]
7 ms	11 ms	16 ms

Dynamic behavior of switch output

Response time ≤20 ms

chanhvinh.com

Energy supply

WARNING

An incorrect connection compromises electrical safety!

- A suitable circuit breaker must be provided for the device in accordance with IEC/EN 61010.
- When using the measuring device in hazardous areas, installation must also comply with the applicable national standards and regulations and the Safety Instructions or Installation or Control Drawings.
- All explosion protection data are provided in separate Ex documentation, which is available on request. The Ex documentation is supplied as standard with all devices approved for use in explosion hazardous areas.
- Protective circuits against reverse polarity, HF influences and overvoltage peaks are installed.
- The device must be operated with a 500 mA fine-wire fuse (slow-blow).

Terminal assignment

4 to 20 mA output

Device	M12 plug	Valve plug	Cable
PMP23	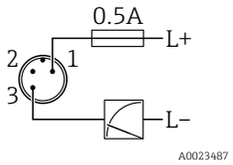	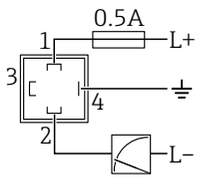	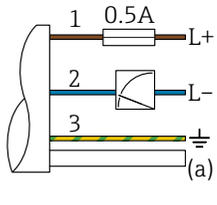 *1 brown = L+* *2 blue = L-* *3 green/yellow = ground connection* *(a) reference air hose*

Devices with IO-Link

Device	M12 plug
PMP23	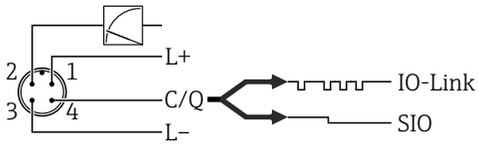 *1 Supply voltage +* *2 4-20 mA* *3 Supply voltage -* *4 C/Q (IO-Link communication or SIO mode)*

Supply voltage

Electronic version	Device	Supply voltage
4 to 20 mA output	PMP23	10 to 30 V DC
IO-Link	PMP23	10 to 30 V DC IO-Link communication is guaranteed only if the supply voltage is at least 18 V.

Current consumption and alarm signal

Electronic version	Device	Current consumption	Alarm signal [1]
4 to 20 mA output	PMP23	≤ 26 mA	> 21 mA
IO-Link	PMP23 with IO-Link	Maximum current consumption: ≤ 300 mA	

1) For MAX alarm (factory setting)

Power supply fault

- Behavior in the event of overvoltage (>30 V):
  The device works continuously up to 34 V DC without damage. If the supply voltage is exceeded, the specified characteristics are no longer guaranteed.
- Behavior in the event of undervoltage:
  If the supply voltage falls below the minimum value, the device switches off in a defined manner.

chanhvinh.com

Electrical connection

Degree of protection

Communication version	Connection	Degree of protection	Option [1]
Analog	Cable 5 m (16 ft)	IP66/68 [2] NEMA Type 4X/6P enclosure	A
	Cable 10 m (33 ft)	IP66/68 NEMA Type 4X/6P enclosure	B
	Cable 25 m (82 ft)	IP66/68 NEMA Type 4X/6P enclosure	C
	Valve plug ISO4400 M16	IP65 NEMA Type 4X enclosure	U
	Valve plug ISO4400 NPT ½	IP65 NEMA Type 4X enclosure	V
Analog, IO-Link	M12 plug	IP65/67 NEMA Type 4X enclosure	M
	M12 plug made of metal	IP66/69 [3] NEMA Type 4X enclosure	N

1) Product Configurator, order code for "Electrical connection"
2) IP 68 (1.83m H2O for 24 h)
3) Designation of the IP protection class according to DIN EN 60529. Previous designation "IP69K" according to DIN 40050 Part 9 is no longer valid (standard withdrawn on November 1, 2012). The tests required by both standards are identical.

Cable specification (analog)

For valve plug: < 1.5 mm^2 (16 AWG) and Ø 4.5 to 10 mm (0.18 to 0.39 in)

Residual ripple

The device operates within the reference accuracy up to ±5 % of the residual ripple of the supply voltage, within the permitted voltage range.

Influence of power supply

≤0.005 % of URV/1 V

Overvoltage protection

The device does not contain any special elements to protect against overvoltage ("wire to ground"). Nevertheless the requirements of the applicable EMC standard EN 61000-4-5 (testing voltage 1kV EMC wire/ground) are met.

chanhvinh.com

Performance characteristics of metallic process membrane

Reference conditions

- As per IEC 60770
- Ambient temperature T_A = constant, in the range of: +21 to +33 °C (+70 to +91 °F)
- Humidity φ = constant, in the range of: 5 to 80 % rH
- Atmospheric pressure p_A = constant, in the range of: 860 to 1060 mbar (12.47 to 15.37 psi)
- Position of the measuring cell = constant, in the range of: horizontal ±1° (see also "Influence of orientation" section)
- Zero based span
- Process membrane material: AISI 316L (1.4435)
- Filling oil: synthetic oil polyalphaolefin FDA 21 CFR 178.3620, NSF H1
- Supply voltage: 24 V DC ±3 V DC
- Load: 320 Ω (at 4 to 20 mA output)

Uncertainty of measurement for small absolute pressure ranges

The smallest extended uncertainty of measurement that can be delivered by our standards is

- in the range of 1 to 30 mbar (0.0145 to 0.435 psi): 0.4 % of reading
- in the range of < 1 mbar (0.0145 psi): 1 % of reading.

Influence of orientation

→ 17

Resolution

Current output: min. 1.6 µA

Reference accuracy

The reference accuracy includes the non-linearity [DIN EN 61298-2 3.11] including the pressure hysteresis [DIN EN 61298-23.13] and non-repeatability [DIN EN 61298-2 3.11] in accordance with the limit point method as per [DIN EN 60770].

% of the calibrated span to the maximum turn down		
Reference accuracy	Non-linearity	Non-repeatability
±0.3	±0.1	±0.1

Overview of the turn down ranges → 11

Thermal change of the zero output and the output span

Measuring cell	−20 to +85 °C (−4 to +185 °F)	−40 to −20 °C (−40 to −4 °F) +85 to +100 °C (+185 to +212 °F)
	% of the calibrated span for TD 1:1	
<1 bar (15 psi)	<1	<1.2
≥1 bar (15 psi)	<0.8	<1

Long-term stability

Analog

1 year	5 years	8 years
% of the URL		
±0.2	±0.4	±0.45

IO-Link

1 year	5 years	8 years
% of the URL		
±0.2	±0.4	±0.45

Switch-on time

≤2 s

The following applies to IO-Link: For small measuring ranges, pay attention to the thermal compensation effects.

chanhvinh.com

Mounting

Installation conditions

- Moisture must not penetrate the housing when mounting the device, establishing the electrical connection and during operation.
- Point the cable and connector downwards where possible to prevent moisture from entering (e.g. rain or condensation water).

Influence of orientation

Any orientation is possible. However, the orientation may cause a zero point shift, i.e. the measured value does not show zero when the vessel is empty or partially full.

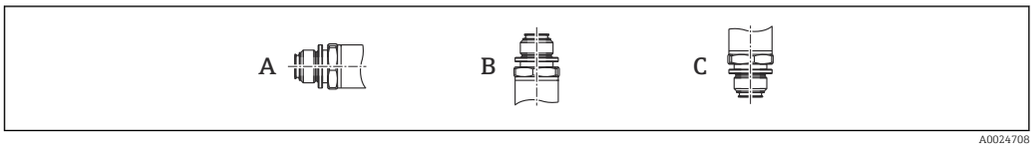

A0024708

PMP23

Process membrane axis is horizontal (A)	Process membrane pointing upwards (B)	Process membrane pointing downwards (C)
Calibration position, no effect	Up to +4 mbar (+0.058 psi)	Up to −4 mbar (−0.058 psi)

Mounting location

Pressure measurement

Pressure measurement in gases

Mount the device with shutoff device above the tapping point so that any condensate can flow into the process.

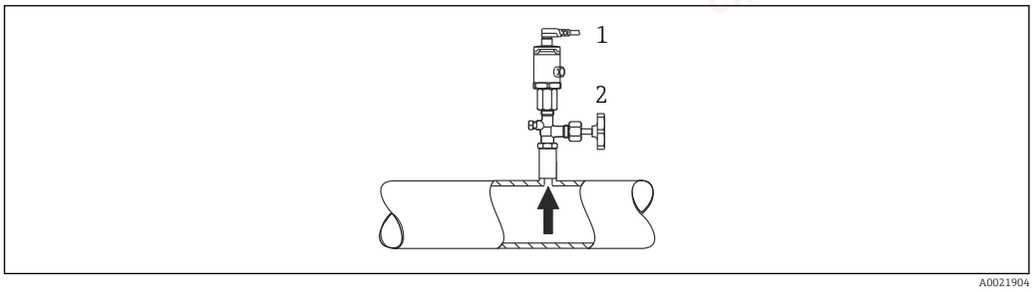

A0021904

1 *Device*
2 *Shutoff device*

Pressure measurement in vapors

For pressure measurement in vapors, use a siphon. The siphon reduces the temperature to almost ambient temperature. Mount the device with a shutoff device at the same height as the tapping point.

Advantage:
only minor/negligible heat effects on the device.

Note the max. permitted ambient temperature of the transmitter!

chanhvinh.com

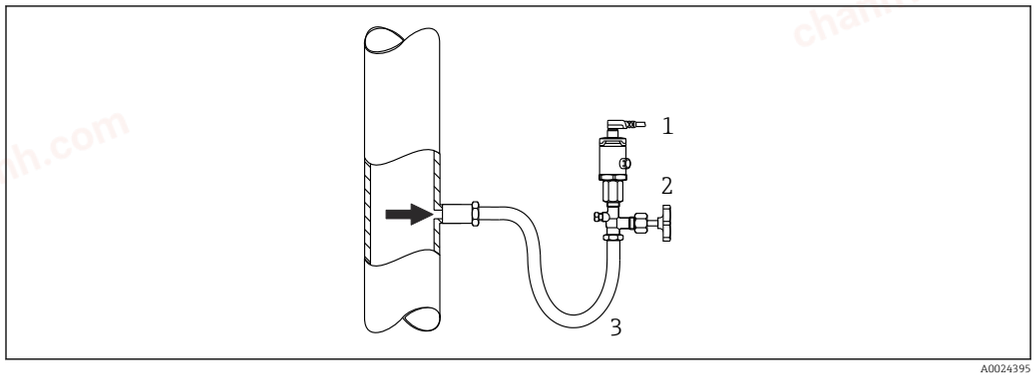

A0024395

1 *Device*
2 *Shutoff device*
3 *Siphon*

Pressure measurement in liquids

Mount the device with a shutoff device at the same height as the tapping point.

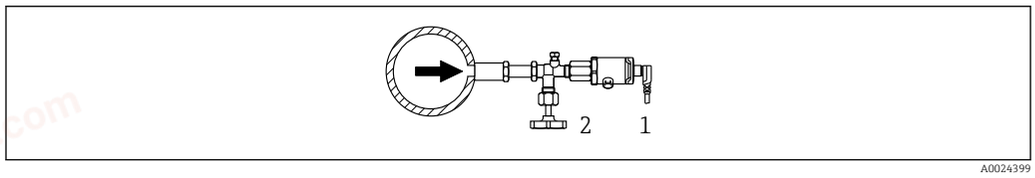

A0024399

1 *Device*
2 *Shutoff device*

Level measurement

- Always install the device below the lowest measuring point.
- Do not install the device at the following positions:
  - in the filling curtain
  - in the tank outlet
  - in the suction area of a pump
  - at a point in the tank which could be affected by pressure pulses from the agitator.

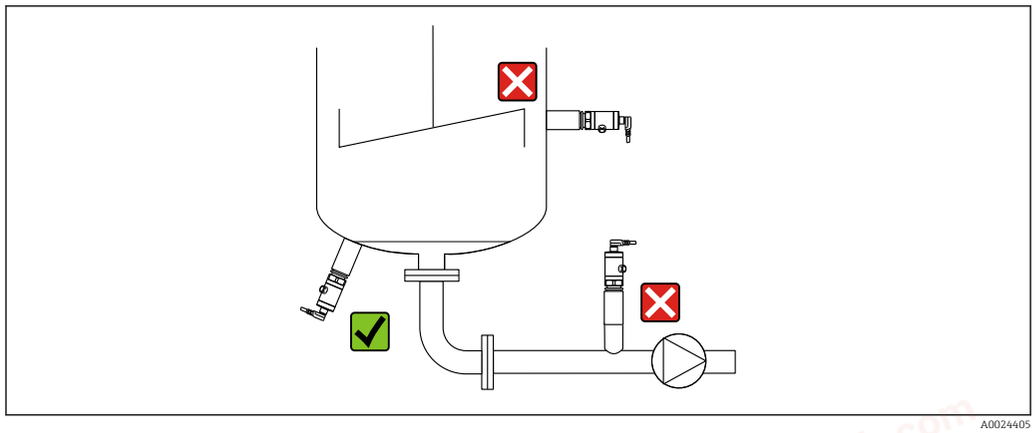

A0024405

chanhvinh.com

Environment

Ambient temperature range

Ambient temperature range [2]
- Devices for hazardous areas: −40 to +70 °C (−40 to +158 °F)
- Analog: −40 to +85 °C (−40 to +185 °F)
- IO-Link: −40 to +70 °C (−40 to +158 °F)

Storage temperature range

−40 to +85 °C (−40 to +185 °F)

Climate class

Climate class	Note
Class 4K4H	Air temperature: −20 to +55 °C (−4 to +131 °F), relative humidity: 4 to 100 % satisfied according to DIN EN 60721-3-4 (condensation is possible)

Degree of protection

Communication version	Connection	Degree of protection	Option [1]
Analog	Cable 5 m (16 ft)	IP66/68 [2] NEMA Type 4X/6P enclosure	A
	Cable 10 m (33 ft)	IP66/68 NEMA Type 4X/6P enclosure	B
	Cable 25 m (82 ft)	IP66/68 NEMA Type 4X/6P enclosure	C
	Valve plug ISO4400 M16	IP65 NEMA Type 4X enclosure	U
	Valve plug ISO4400 NPT ½	IP65 NEMA Type 4X enclosure	V
Analog, IO-Link	M12 plug	IP65/67 NEMA Type 4X enclosure	M
	M12 plug made of metal	IP66/69 [3] NEMA Type 4X enclosure	N

1) Product Configurator, order code for "Electrical connection"
2) IP 68 (1.83m H2O for 24 h)
3) Designation of the IP protection class according to DIN EN 60529. Previous designation "IP69K" according to DIN 40050 Part 9 is no longer valid (standard withdrawn on November 1, 2012). The tests required by both standards are identical.

Vibration resistance

Test standard	Vibration resistance
IEC 60068-2-64:2008	Guaranteed for 5 to 2000Hz: 0.05 g^2/Hz

Electromagnetic compatibility

- Interference emission as per EN 61326-1 equipment B
- Interference immunity as per EN 61326-1 (industrial environment)
  Devices with IO-Link: For intended use, the switch output can switch to the communication mode for 0.2 s in the event of transient faults (only for devices with IO-Link).
- NAMUR recommendation EMC (NE 21) (not for devices with IO-Link)
- Maximum deviation: 1.5% with TD 1:1

For more details please refer to the Declaration of Conformity (devices without IO-Link).

2) Exception: the following cable is designed for an ambient temperature range of −25 to +70 °C (−13 to +158 °F): Product Configurator, order code for "Accessory enclosed" option "RZ".

chanhvinh.com

Process

Process temperature range for devices with metallic process membrane

- −10 to +100 °C (+14 to +212 °F)
- SIP cleaning
  at +135 °C (+275 °F) for a maximum of one hour (device in operation but not within measurement specification)

Applications with jumps in temperature

Frequent extreme changes in temperatures can temporarily cause measuring errors. Internal temperature compensation occurs more quickly the smaller the change in temperature and the longer the time interval involved.

For further information please contact your local Endress+Hauser Sales Center.

Pressure specifications

WARNING

The maximum pressure for the measuring device depends on the lowest-rated element with regard to pressure.

- For pressure specifications, see the "Measuring range" section and the "Mechanical construction" section.
- The Pressure Equipment Directive (2014/68/EU) uses the abbreviation "PS". The abbreviation "PS" corresponds to the MWP (maximum working pressure) of the measuring device.
- MWP (maximum working pressure): The MWP (maximum working pressure) is specified on the nameplate. This value is based on a reference temperature of +20 °C (+68 °F) and may be applied to the device for an unlimited period of time. Observe the temperature dependency of the MWP.
- OPL (over pressure limit): The test pressure corresponds to the over pressure limit of the sensor and may only be applied temporarily to ensure that the measurement is within the specifications and no permanent damage develops. In the case of sensor range and process connections where the over pressure limit (OPL) of the process connection is smaller than the nominal value of the sensor, the device is set at the factory, at the very maximum, to the OPL value of the process connection. If you want to use the entire sensor range, select a process connection with a higher OPL value.

chanhvinh.com

Mechanical construction

For the dimensions, see the Product Configurator: www.endress.com

Search for product → click "Configuration" to the right of the product image → after configuration click "CAD"

The following dimensions are rounded values. For this reason, they may deviate slightly from the dimensions given on www.endress.com.

Design, dimensions

Device height

The device height is calculated from

- the height of the electrical connection
- the height of the housing and
- the height of the individual process connection.

The individual heights of the components are listed in the following sections. To calculate the device height simply add up the individual heights of the components. Where applicable also take into consideration the installation distance (space that is used to install the device). You can use the following table for this purpose:

Section	Page	Height	Example
Electrical connection	→ 21	(A)	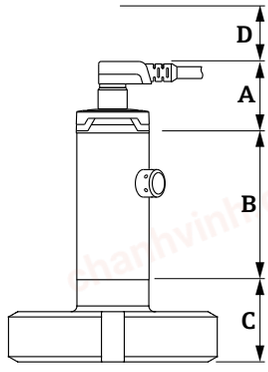
Housing height	→ 22	(B)	
Process connection height	→ 23	(C)	
Installation distance	-	(D)	

Electrical connection

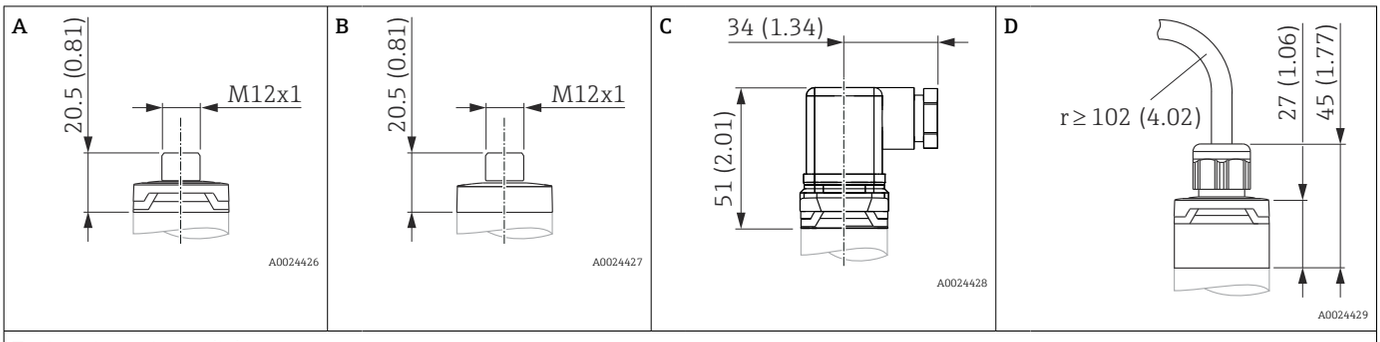

Engineering unit mm (in)

Item	Designation	Material	Weight kg (lbs)	Device	Option [1]
A	M12 plug IP65/67 (Additional dimensions → 36)	Housing cap made of plastic	0.012 (0.03)	PMP23	M Plug connector with cable can be ordered as an accessory → 36
B	M12 plug IP66/69	Housing cap made of metal	0.030 (0.07)	PMP23	In the case of IP69 protection, the housing cap is made of metal. Can be ordered separately via option "N".
C	M16 valve plug	Plastic PPSU	0.060 (0.14)	PMP23	U
C	NPT ½ valve plug	Plastic PPSU	0.060 (0.14)	PMP23	V

chanhvinh.com

Item	Designation	Material	Weight kg (lbs)	Device	Option [1]
D	Cable 5 m (16 ft)	PUR (UL94V0)	0.280 (0.62)	PMP23	A
D	Cable 10 m (33 ft)	PUR (UL94V0)	0.570 (1.26)	PMP23	B
D	Cable 25 m (82 ft)	PUR (UL94V0)	1.400 (3.09)	PMP23	C

1) Product Configurator, order code for "Electrical connection"

Housing

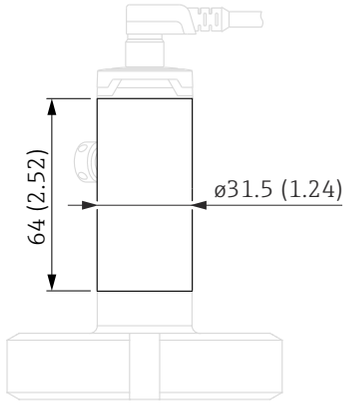

Engineering unit mm (in)

Device	Material	Weight kg (lbs)
PMP23	Stainless steel 316L	0.100 (0.22)

chanhvinh.com

Process connections with flush mount, metal process membrane **Thread ISO 228 G**

A

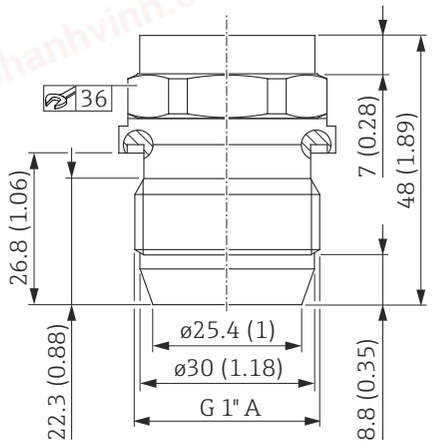

B

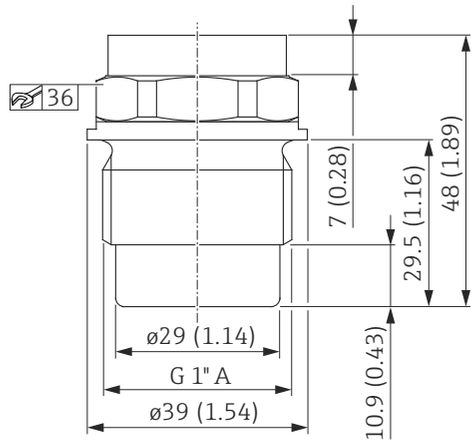

Engineering unit mm (in). Diameter of process isolating diaphragm: 17.2 mm (0.68 in)

Item	Description	Seal	Material	Weight	Approval	Option [1]
				kg (lbs)		
A	Thread ISO 228 G 1" A	Metal joint	316L	0.270 (0.60)	CRN	WQJ
B	Thread ISO 228 G 1" A	Seal established via O-ring. VMQ O-ring is enclosed with QJ and QK accessories.	316L	0.270 (0.60)	EHEDG, 3A [2], CRN	WSJ

1) Product Configurator, order code for "Process connection"
2) EHEDG and 3A only in conjunction with weld-in adapter → 35

chanhvinh.com

Thread M24 x 1.5

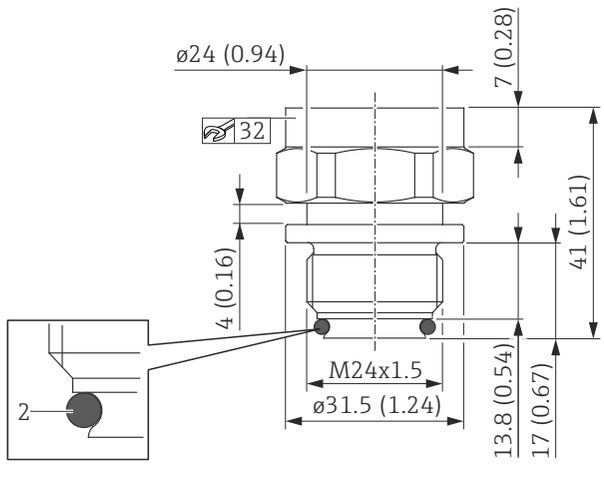

Engineering unit mm (in). Diameter of process isolating diaphragm: 17.2 mm (0.68 in)

Designation	Seal	Material	Weight	Approval	Option [1]
			kg (lbs)		
M24 x 1.5 [2]	EPDM O-ring (2), pre-mounted	316L	0.150 (0.33)	EHEDG, 3A, CRN	X2J
M24 x 1.5 [2]	FKM O-ring (2), pre-mounted	316L	0.150 (0.33)	EHEDG, 3A, CRN	X3J

1) Product Configurator, order code for "Process connection"
2) torque 65 Nm (48 lbf ft)

chanhvinh.com

Hygienic connections

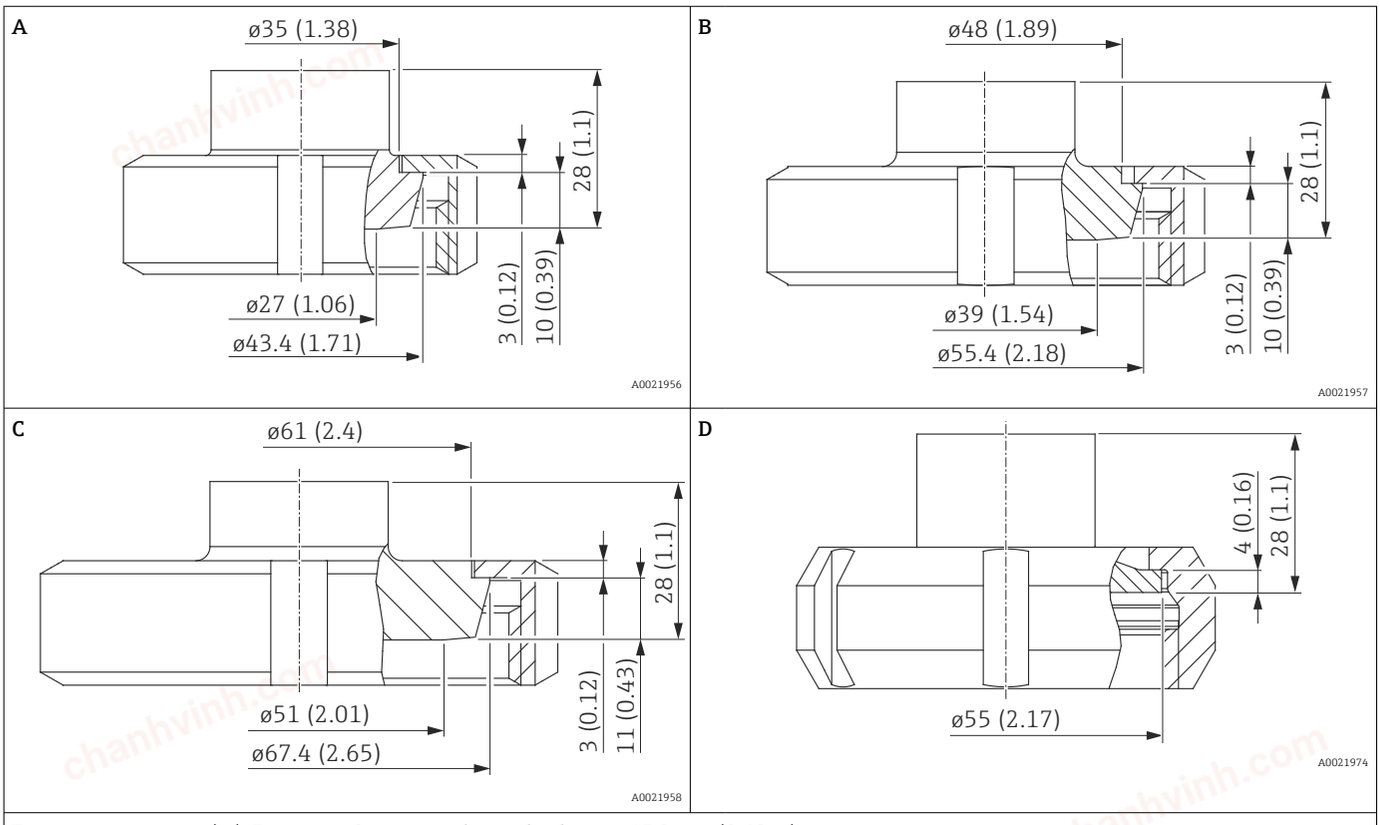

Engineering unit mm (in). Diameter of process isolating diaphragm: 17.2 mm (0.68 in)

Position	Designation	Nominal pressure	Material [1]	Weight	Approval	Option [2]
		PN		kg (lbs)		
A	DIN 11851 DN 25	40	316L	0.360 (0.79)	3A, EHEDG, CRN	1GJ
B	DIN 11851 DN 40	40	316L	0.520 (1.15)	3A, EHEDG, CRN	1JJ
C	DIN 11851 DN 50	25	316L	0.760 (1.68)	3A, EHEDG, CRN	1DJ
D	SMS 1 ½"	25	316L	0.440 (0.97)	3A, CRN	4QJ

1) Roughness of wetted surfaces Ra ≤0.76 µm (29.9 µin).
2) Product Configurator, order code for "Process connection"

chanhvinh.com

Hygienic connections

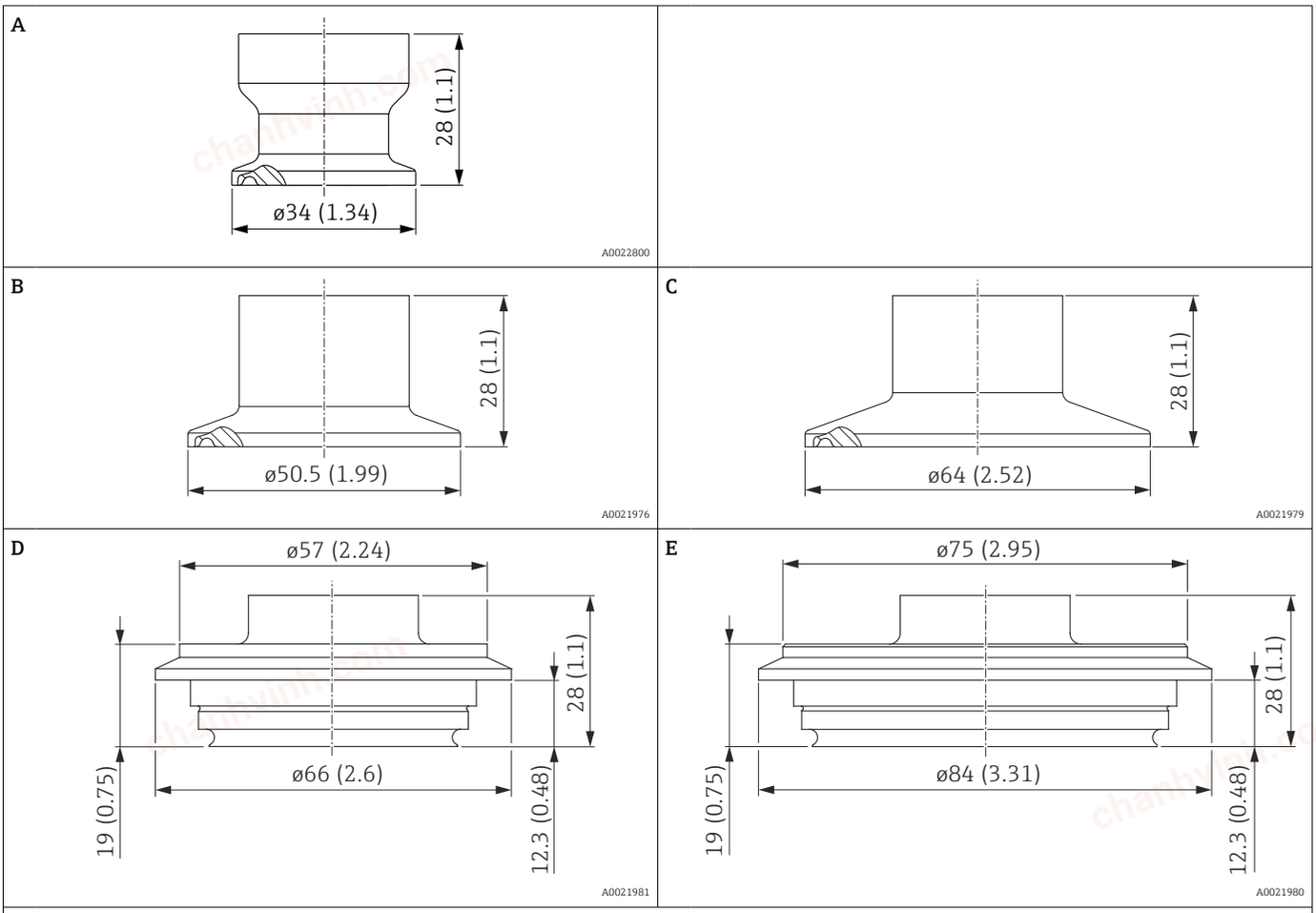

Engineering unit mm (in). Diameter of process isolating diaphragm: 17.2 mm (0.68 in)

Item	Designation	Approval	Nominal pressure	Material [1]	Weight	Option [2]
			PN		kg (lbs)	
A	Clamp ISO 2852 DN22	3A, EHEDG, CRN	40	316L	0.090 (0.20)	3AJ
B	Tri-Clamp ISO 2852 DN 25 – DN 38 (1" - 1 ½"), DIN32676 DN25-38	3A, EHEDG, CRN	40	316L	0.160 (0.35)	3CJ
C	Tri-Clamp ISO 2852 DN 40 – DN 51 (2"), DIN32676 DN50, EHEDG, 3A	3A, EHEDG, CRN	40	316L	0.230 (0.51)	3EJ
D	Varivent F pipe DN25-32	3A, EHEDG, CRN	40	316L	0.350 (0.77)	41J
E	Varivent N pipe DN40-162	3A, EHEDG, CRN	40	316L	0.630 (1.39)	42J

1) Roughness of wetted surfaces Ra ≤0.76 µm (29.9 µin).
2) Product Configurator, order code for "Process connection"

chanhvinh.com

Hygienic connections

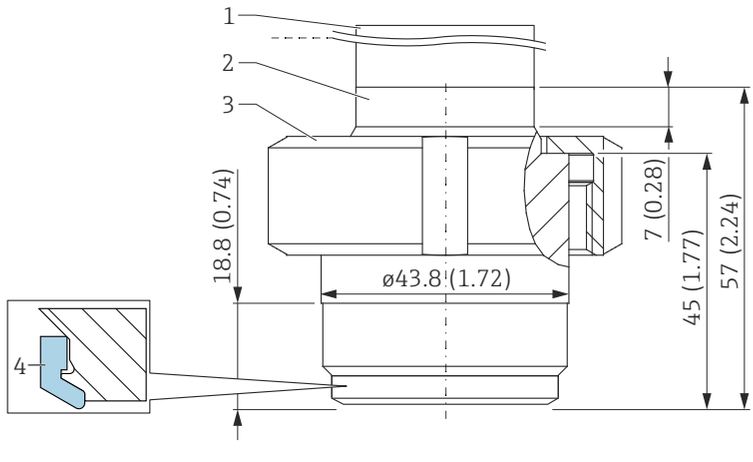

1 Top section:
2 Bottom section: AISI 316L (1.4435)
3 Slotted nut: AISI 304 (1.4301) or AISI 304L (1.4307)
4 EPDM O-ring with support ring AISI 316L (1.4404)

Engineering unit mm (in). Diameter of process membrane: 17.2 mm (0.68 in)

- The roughness of the surface in contact with the medium is Ra ≤0.76 µm (30 µin).
- EPDM O-ring with support ring AISI 316L (1.4404): FDA, USP Class VI; 1 pc, order number: 71431380

Designation	Nominal pressure	Weight	Approval [1) 2)]	Option [3)]
	bar (psi)	kg (lb)		
Universal process adapter EPDM O-ring with support ring (4) [4)]	10 (145)	0.730 (1.61)	CRN	52J

1) CSA approval: Product Configurator, order code for “Approval”
2) For additional approvals, see the Product Configurator.
3) Product Configurator, order code for "Process connection"
4) With EHEDG approval.

chanhvinh.com

Materials in contact with process

NOTICE

- Device components in contact with the process are listed in the "Mechanical construction" and "Ordering information" sections.

TSE Certificate of Suitability

The following applies to all device components in contact with the process:

- They do not contain any materials derived from animals.
- No additives or operating materials derived from animals are used in production or processing.

Process connections

- Endress+Hauser supplies a threaded connection made of stainless steel in accordance with AISI 316L (DIN/ EN material number 1.4404 or 1.4435). With regard to their stability-temperature property, the materials 1.4404 and 1.4435 are grouped together under 13E0 in EN 1092-1: 2001 Tab. 18. The chemical composition of the two materials can be identical.
- "Clamp connections" and "Hygienic process connections": AISI 316L (DIN/EN material number 1.4435)

Process isolating diaphragm

Description	Material
Metal process isolating diaphragm	AISI 316L (DIN/EN material number 1.4435)

Seals

See the specific process connection.

chanhvinh.com

Materials not in contact with process

Housing

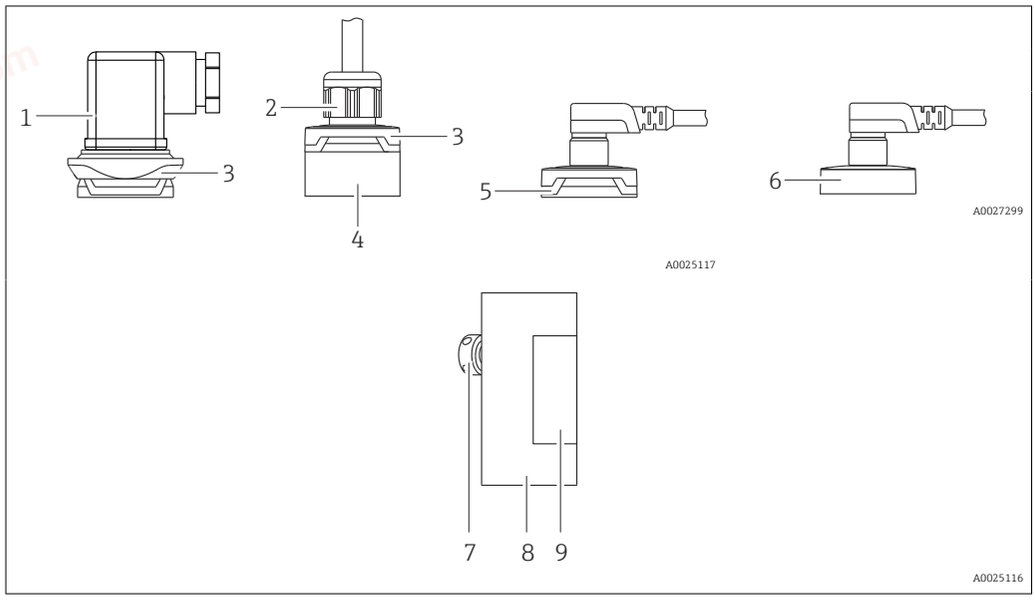

Item number	Component	Material
1	Valve plug	▪ Seal: NBR ▪ Plug: PA ▪ Screw: V2A
2	Cable	▪ Pressure screw: PVDF ▪ Seal: TPE-V ▪ Cable: PUR (UL 94 V0)
3	Design element	PBT/PC
4	Connection	PPSU
5	M12 plug	Plastic: PPSU
6	M12 plug	316L (1.4404) Metal housing cap can be ordered as an option. For IP69: metal housing cap.
7	Pressure compensation element	316L (1.4404)
8	Housing	316L (1.4404)
9	Nameplates	Lasered directly onto the housing

Filling oil

Device	Filling oil
PMP23	Synthetic oil polyalphaolefin FDA 21 CFR 178.3620, NSF H1

Cleaning

Device	Description	Option [1]
PMP23	Cleaned from oil+grease	HA

1) Product Configurator, order code for "Service"

chanhvinh.com

Operability

IO-Link

Operating concept for devices with IO-Link

Operator-oriented menu structure for user-specific tasks

Reliable operation

Operation in the following languages:
Via IO-Link: English

Efficient diagnostics increase measurement reliability

- Remedial measures
- Simulation options

IO-Link information

IO-Link is a point-to-point connection for communication between the measuring device and an IO-Link master. The measuring device features an IO-Link communication interface type 2 with a second IO function on pin 4. This requires an IO-Link-compatible assembly (IO-Link master) for operation. The IO-Link communication interface enables direct access to the process and diagnostic data. It also provides the option of configuring the measuring device while in operation.

Physical layer, the measuring device supports the following features:
- IO-Link specification: Version 1.1
- IO-Link Smart Sensor Profile 2nd Edition
- SIO mode: Yes
- Speed: COM2; 38.4 kBaud
- Minimum cycle time: 2.5 msec.
- Process data width:
  - Without Smart Sensor Profile: 32 bit
  - With Smart Sensor Profile: 48 bit (float32 + 14-bit vendor spec. + 2 bits SSC)
- IO-Link data storage: Yes
- Block configuration: Yes

IO-Link download

http://www.endress.com/download
- Select "Software" as the media type.
- Select "Device Driver" as the software type.
  Select IO-Link (IODD).
- In the "Text Search" field enter the device name.

https://ioddfinder.io-link.com/
Search by
- Manufacturer
- Article number
- Product type

Plug-on display PHX20 (optional)

Devices with valve plug can be fitted with the optional local display PHX20.

Designation	Option [1]
Plug-on display PHX20, IP65	RU

1) Product Configurator, order code for "Accessories"

A 1-line liquid crystal display (LCD) is used. The local display shows measured values, fault messages and information messages. The device display can be turned in 90° steps. Depending on the orientation of the device, it is therefore easy to read the measured values.

Technical data

Display:	4-digit, red LED display
Digit height:	7.62 mm; programmable decimal point setting

chanhvinh.com

Display range:	-1999...9999
Accuracy:	0.2% of span ±1 digit
Electrical connection:	to transmitter with 4 to 20 mA output and elbow plug DIN 43 650, with reverse polarity protection
Power supply for display:	not required, self-powered by the current loop
Voltage drop:	≤ 5 V (corresponds to load: max. 250 Ω)
Conversion rate:	3 measurements per second
Damping:	0.3 to 20 s (configurable)
Data backup:	non-volatile EEPROM
Error message:	▪ HI: Overranging ▪ LO: Underranging
Programming:	via 2 buttons, menu-guided, scaling of display range, decimal point, damping, error message
Degree of protection:	IP 65
Effect of temperature on display:	0.1% / 10 K
Electromagnetic compatibility (EMC):	Interference emission as per EN 50081, interference immunity as per EN 50082
Permitted current load:	max. 60 mA
Ambient temperature:	0 to +60 °C (+32 to +140 °F)
Housing material:	Plastic Pa6 GF30, blue Front screen made of PMMA, red
Order number:	52022914

chanhvinh.com

Certificates and approvals

CE mark

The device meets the legal requirements of the relevant EC directives. Endress+Hauser confirms that the device has been successfully tested by applying the CE mark.

RoHS

The measuring system complies with the substance restrictions of the Restriction on Hazardous Substances Directive 2011/65/EU (RoHS 2).

RCM marking

The supplied product or measuring system meets the ACMA (Australian Communications and Media Authority) requirements for network integrity, interoperability, performance characteristics as well as health and safety regulations. Here, especially the regulatory arrangements for electromagnetic compatibility are met. The products bear the RCM marking on the nameplate.



A0029561

EAC conformity

The devices PMP21 and PMP23 meet the statutory requirements of the applicable EAC regulations. These are listed in the corresponding EAC Declaration of Conformity along with the standards applied.

Endress+Hauser confirms successful testing of the device by affixing to it the EAC mark.

Approval

CSA C/US General Purpose

Safety Instructions (XA)

Safety Instructions (XA) are supplied with the device depending on the approval. They are an integral part of the Operating Instructions.

The nameplate indicates the Safety Instructions (XA) that are relevant to the device.

Suitable for hygiene applications

For information on installation and approvals, see documentation SD02503F "Hygiene approvals".

For information on 3-A and EHEDG-tested adapters, see documentation TI00426F "Weld-in adapter, process adapter and flanges".

Pressure Equipment Directive 2014/68/EU (PED)

Pressure equipment with permitted pressure ≤ 200 bar (2 900 psi)

Pressure equipment (maximum allowable pressure PS ≤ 200 bar (2 900 psi)) can be classified as pressure accessories in accordance with the Pressure Equipment Directive 2014/68/EU. If the maximum allowable pressure is ≤ 200 bar (2 900 psi) and the pressurized volume of the pressure equipment is ≤ 0.1 l, the pressure equipment is subject to the Pressure Equipment Directive (see Pressure Equipment Directive 2014/68/EU, Article 4, point 3). The Pressure Equipment Directive only requires that the pressure equipment shall be designed and manufactured in accordance with the "sound engineering practice of a Member State".

Reasons:

- Pressure Equipment Directive (PED) 2014/68/EU Article 4, point 3
- Pressure equipment directive 2014/68/EU, Commission's Working Group "Pressure", Guideline A-05 + A-06

Note:

A partial examination shall be performed for pressure instruments that are part of safety equipment for the protection of a pipe or vessel from exceeding allowable limits (safety accessory in accordance with Pressure Equipment Directive 2014/68/EU, Article 2, point 4).

chanhvinh.com

Manufacturer declarations

Depending on the desired configuration, the following documents can be ordered additionally with the device:
- FDA conformity
- TSE-free: materials free from animal origin
- Regulation (EC) No. 2023/2006 (GMP)
- Regulation (EC) No. 1935/2004 on materials and articles intended to come into contact with food

Downloading the Declaration of Conformity

www.endress.com → Download

Other standards and guidelines

The applicable European guidelines and standards can be found in the relevant EU Declarations of Conformity. The following were also applied:

DIN EN 60770 (IEC 60770):

Transmitters for use in industrial process control systems Part 1: Methods for performance evaluation

Methods for evaluating the performance of transmitters for control and regulation in industrial process control systems.

DIN 16086:

Electrical pressure measuring instruments, pressure sensors, pressure transmitters, pressure measuring instruments, concepts, specifications on data sheets

Procedure for writing specifications in data sheets for electrical pressure measuring instruments, pressure sensors and pressure transmitters.

EN 61326-X:

EMC product family standard for electrical equipment for measurement, control and laboratory use.

EN 60529:

Degrees of protection provided by enclosures (IP code)

NAMUR - User association of automation technology in process industries.

NE21 - Electromagnetic Compatibility (EMC) of Industrial Process and Laboratory Control Equipment.

NE43 - Standardization of the Signal Level for the Failure Information of Digital Transmitters.

NE44 - Standardization of Status Indicators on PCT Instruments with the Help of Light Emitting Diodes

NE53 - Software of Field Devices and Signal-processing Devices with Digital Electronics

CRN approval

A CRN approval is available for some device versions. A CRN-approved process connection with a CSA approval must be ordered for a CRN-approved device. The CRN-approved devices are assigned the registration number 0F18141.5C.

Ordering information: Product Configurator, order code for "Process connection" (the CRN process connections are indicated in the "Mechanical construction" section.)

Calibration unit

Designation	Option [1]
Sensor range; %	A
Sensor range; mbar/bar	B
Sensor range; kPa/MPa	C
Sensor range; psi	F
Customer-specific; see additional spec.	J

1) Product Configurator, order code for "Calibration; unit"

chanhvinh.com

Calibration

Designation	Option [1]
3-point certificate of calibration [2]	F3

1) Product Configurator, order code for "Calibration"
2) No final test report for PNP outputs.

Inspection certificates

Device	Designation	Option [1]
PMP23	3.1 Material documentation, wetted metal parts, EN10204-3.1 inspection certificate	JA
PMP23	Surface finish measurement ISO4287/Ra, wetted metal parts, inspection certificate	KB

1) Product Configurator, order code for "Test, certificate"

Documentation currently available on the Endress+Hauser website: www.endress.com → Downloads or with the serial number of the device under Online Tools in the Device Viewer.

Service

Printed product documentation

A printed (hard copy) version of test reports, declarations and inspection certificates can optionally be ordered via order code 570 "Service", option I7 "Printed product documentation". The documents are then provided with the device upon delivery.

Additional approval

Device	Designation	Option [1]
PMP23	EHEDG, declaration	LD
PMP23	3A, declaration	LB
PMP23	Declaration of Conformity EC1935/2004, wetted parts	L3

1) Product Configurator, order code for "Additional approval"

Ordering information

Detailed ordering information is available from the following sources:
- In the Product Configurator on the Endress+Hauser website: www.endress.com -> Click "Corporate" -> Select your country -> Click "Products" -> Select the product using the filters and search field -> Open product page -> The "Configure" button to the right of the product image opens the Product Configurator.
- From your Endress+Hauser Sales Center: www.addresses.endress.com

Product Configurator - the tool for individual product configuration
- Up-to-the-minute configuration data
- Depending on the device: Direct input of measuring point-specific information such as measuring range or operating language
- Automatic verification of exclusion criteria
- Automatic creation of the order code and its breakdown in PDF or Excel output format
- Ability to order directly in the Endress+Hauser Online Shop

Scope of delivery
- Measuring device
- Optional accessories
- Brief Operating Instructions
- Certificates

chanhvinh.com

Accessories

Weld-in adapter

Various weld-in adapters are available for installation in vessels or pipes.

Device	Description	Option [1]	Order number
PMP23	Weld-in adapter M24, d=65, 316L	PM	71041381
PMP23	Weld-in adapter M24, d=65, 316L 3.1 EN10204-3.1 material, inspection certificate	PN	71041383
PMP23	Weld-in adapter G1, 316L, conical metal joint	QE	52005087
PMP23	Weld-in adapter G1, 316L, 3.1, conical metal joint, EN10204-3.1 material, inspection certificate	QF	52010171
PMP23	Weld-in tool adapter G1, brass	QG	52005272
PMP23	Weld-in adapter G1, 316L, silicone O-ring seal	QJ	52001051
PMP23	Weld-in adapter G1, 316L, 3.1, silicone O-ring seal, EN10204-3.1 material, inspection certificate	QK	52011896
PMP23	Weld-in adapter Uni D65, 316L	QL	214880-0002
PMP23	Weld-in adapter Uni D65, 316L 3.1 EN10204-3.1 material, inspection certificate	QM	52010174
PMP23	Weld-in tool adapter Uni D65/D85, brass	QN	71114210
PMP23	Weld-in adapter Uni D85, 316L	QP	52006262
PMP23	Weld-in adapter Uni D85, 316L 3.1 EN10204-3.1 material, inspection certificate	QR	52010173

1) Product Configurator, order code for "Accessory enclosed"

If installed horizontally and weld-in adapters with a leakage hole are used, ensure that the leakage hole is pointing down. This allows leaks to be detected as quickly as possible.

Process adapter M24

The following process adapters can be ordered for the process connections with order option X2J and X3J:

Device	Description	Order number	Order number with inspection certificate 3.1 EN10204
PMP23	Varivent F DN32 PN40	52023996	52024003
PMP23	Varivent N DN50 PN40	52023997	52024004
PMP23	DIN11851 DN40	52023999	52024006
PMP23	DIN11851 DN50	52023998	52024005
PMP23	SMS 1½"	52026997	52026999
PMP23	Clamp 1½"	52023994	52024001
PMP23	Clamp 2"	52023995	52024002
PMP23	APV Inline	52024000	52024007

Flush mount pipe connections M24

Device	Description	Option [1]
PMP23	Pipe connection DN25 DIN11866, weld-in, flush mount, for devices with M24 connection	QS
PMP23	Pipe connection DN25 DIN11866, Clamp DIN32676, flush mount, for devices with M24 connection	QT
PMP23	Pipe connection DN32 DIN11866, weld-in, flush mount, for devices with M24 connection	QU
PMP23	Pipe connection DN32 DIN11866, Clamp DIN32676, flush mount, for devices with M24 connection	QV
PMP23	Pipe connection DN40 DIN11866, weld-in, flush mount, for devices with M24 connection	QW

chanhvinh.com

Device	Description	Option [1]
PMP23	Pipe connection DN40 DIN11866, Clamp DIN32676, flush mount, for devices with M24 connection	QX
PMP23	Pipe connection DN50 DIN11866, weld-in, flush mount, for devices with M24 connection	QY
PMP23	Pipe connection DN50 DIN11866, Clamp DIN32676, flush mount, for devices with M24 connection	QZ

1) Product Configurator, order code for "Accessory enclosed"

Plug-on display PHX20 → 30

M12 plug-in jack

Plug	Degree of protection	Material	Option [1]	Order number
M12 (self-terminated connection at M12 plug) 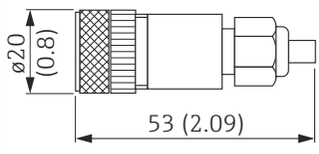	IP67	▪ Union nut: Cu Sn/Ni ▪ Body: PBT ▪ Seal: NBR	R1	52006263
M12 90 degrees with 5m (16 ft) cable 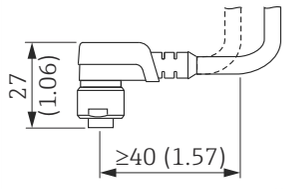	IP67	▪ Union nut: GD Zn/Ni ▪ Body: PUR ▪ Cable: PVC Cable colors ▪ 1 = BN = brown ▪ 2 = WT = white ▪ 3 = BU = blue ▪ 4 = BK = black	RZ	52010285
M12 90 degrees (self-terminated connection at M12 plug) 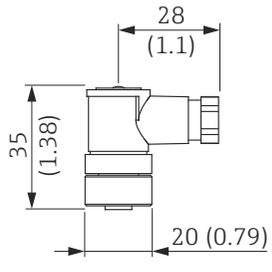	IP67	▪ Union nut: GD Zn/Ni ▪ Body: PBT ▪ Seal: NBR	RM	71114212
M12 90 degrees with 5m (16 ft) cable (terminated at one end) 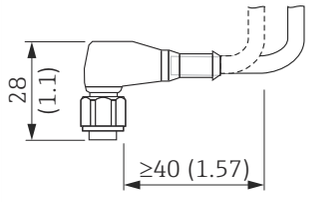	IP69 [2]	▪ Union nut: 316L (1.4435) ▪ Body and cable: PVC and PUR	RW	52024216

1) Product Configurator, order code for "Accessory enclosed"
2) Designation of IP class as per DIN EN 60529. Previous designation "IP69K" as per DIN 40050 Part 9 no longer valid (standard withdrawn on 1 November 2012). The required tests of both standards are identical.

chanhvinh.com

chanhvinh.com
chanhvinh.com
chanhvinh.com
chanhvinh.com
chanhvinh.com
chanhvinh.com

chanhvinh.com

Documentation

Field of activities	Pressure measurement, powerful instruments for process pressure, differential pressure, level and flow: FA00004P
Technical Information	▪ TI00241F: EMC Test Procedures ▪ TI00426F: Weld-in adapters, process adapters and flanges (overview)
Safety Instructions (XA)	Safety Instructions (XA) are supplied with the device depending on the approval. They are an integral part of the Operating Instructions. The nameplate indicates the Safety Instructions (XA) that are relevant to the device.

Registered trademarks

IO-Link

is a registered trademark of the IO-Link company group.

chanhvinh.com

chanhvinh.com

71621499

www.addresses.endress.com

Endress+Hauser

People for Process Automation