chanhvinh.com

TI01619C/07/EN/02.22-00
71556089
2022-01-14

Technical Information
Memosens COS22E

Hygienic amperometric oxygen sensor with maximum measurement stability over multiple sterilization cycles



Digital with Memosens 2.0 technology

Application

- Pharmaceutics and biotechnology
  - Process control in enzyme production
  - Control of culture processing
- Water treatment
  - Boiler feedwater
  - WFI (water for injection)
- Residual oxygen measurement in processes
- With ATEX, IECEx, NEPSI, Japan Ex, UK Ex and INMETRO approval for use in Zone 0, Zone 1 and Zone 2 hazardous areas in gas atmospheres. With CSA C/US approval also in Class I Division 1 hazardous areas in explosive gas atmospheres. Also suitable for Class I Division 2.

Your benefits

- Application-specific versions:
  - Sensor for standard applications, e.g. for fermenter control
  - Trace sensor, e.g. for use in the power station sector and for the beverage industry (CO2-compatible sensor)
- Accurate measurements with longterm stability and permanent self-monitoring
  - Sterilizable and autoclavable
  - Stainless steel 1.4435 (AISI 316L) meets the highest demands of the pharmaceutical industry
- IP69 protection
- Sensor certified in accordance with EHEDG
- Complies with the relevant sections of the ASME-BPE
- Available with a certificate of conformity for pharmaceutical requirements
- Available with inspection certificate EN 10204-3.1
- Materials compliant with FDA and/or USP class VI specifications

Endress+Hauser
People for Process Automation

chanhvinh.com

Function and system design

Measuring principle

During amperometric oxygen measurement, oxygen molecules diffuse through the membrane and are reduced to hydroxide ions (OH-) at the working electrode. At the counter-electrode, silver is oxidized to silver ions (Ag+) (this forms a silver halide layer). The associated release of electrons at the working electrode and absorption of electrons at the counter-electrode causes a current to flow. Under constant conditions, this current flow is proportional to the oxygen content of the medium. The current is converted in the transmitter and indicated on the display as an oxygen concentration in mg/l, µg/l, ppm, ppb or Vol%, ppmVol, raw value nA, as a saturation index in % SAT or as an oxygen partial pressure in hPa.

Measuring system

A complete measuring system comprises:
- a Memosens COS22E oxygen sensor
- a transmitter, see table
- an appropriate measuring cable, see table
- Optional: an assembly, e.g. Unifit CPA842 fixed installation assembly , Flowfit CYA21 flow assembly or Cleanfit CPA875 retractable assembly

Transmitter	Memosens COS22E- standard, trace
Liquiline CM44x	Cable: CYK10
Liquiline CM42	Cable: CYK10
Liquiline Mobile CML18	Cable: CYK20
Third-party provider	Memosens partner

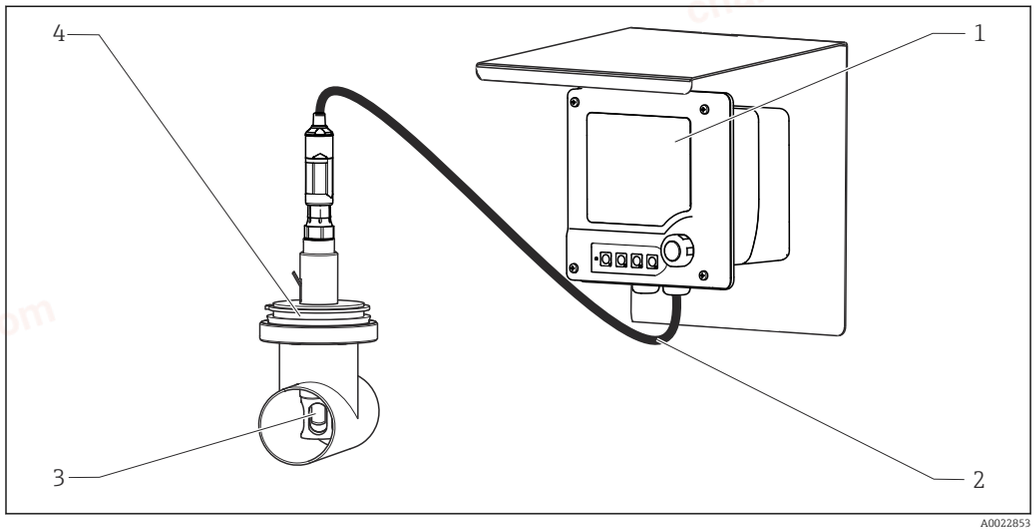

1 *Example of a measuring system with Memosens COS22E*

1 *Liquiline CM42*
2 *Measuring cable CYK10*
3 *Oxygen sensor Memosens COS22E*
4 *Permanent installation assembly CPA842*

Dependability

Reliability

Memosens technology digitizes the measured values in the sensor and transmits the data to the transmitter via a . The result:
- If the sensor fails or there is an interruption in the connection between the sensor and transmitter, this is reliably detected and reported.
- The availability of the measuring point is reliably detected and reported.

chanhvinh.com

Maintainability

Easy handling
Sensors with Memosens technology have integrated electronics that store calibration data and other information (e.g. total operating hours or operating hours under extreme measuring conditions). Once the sensor has been connected, the sensor data are transferred automatically to the transmitter and used to calculate the current measured value. As the calibration data are stored in the sensor, the sensor can be calibrated and adjusted independently of the measuring point. The result:
- Easy calibration in the measuring lab under optimum external conditions increases the quality of the calibration.
- Pre-calibrated sensors can be replaced quickly and easily, resulting in a dramatic increase in the availability of the measuring point.
- The availability of sensor data means that maintenance intervals can be accurately defined and predictive maintenance is possible.
- The sensor history can be documented with external storage media and evaluation programs.
- The application range of the sensor can be determined based on its previous history.

Integrity

With inductive transmission of the measured value using a non-contact connection, Memosens guarantees maximum process safety and offers the following benefits:
- All problems caused by moisture are eliminated.
  - Plug-in connection remains free from corrosion
  - Measured value distortion from moisture is not possible.
  - The plug-in system can even be connected under water.
- The transmitter is galvanically decoupled from the medium.
- EMC safety is guaranteed by screening measures for the digital transmission of measured values.

Input

Measured variables

Dissolved oxygen [mg/l, µg/l, ppm, ppb, %SAT, %Vol, ppmVol, raw value nA, hPa]

Temperature [°C, °F]

Measuring ranges

Measuring ranges apply for 20 °C (68 °F) and 1013 hPa (15 psi)

	Measuring range	Optimum measuring range [1]
COS22E-**22***** (standard sensor)	0 to 60 mg/l 0 to 600 % SAT 0 to 1200 hPa 0 to 100 Vol%	0 to 20 mg/l 0 to 200 % SAT 0 to 400 hPa 0 to 40 Vol%
COS22E-**12***** (trace sensor)	0 to 10 mg/l 0 to 120 % SAT 0 to 250 hPa 0 to 25 Vol%	0 to 2 mg/l 0 to 20 % SAT 0 to 40 hPa 0 to 4 Vol%

1) Applications in this range guarantee a long service life and low maintenance

The sensor has a measuring range up to max. 1200 hPa.

The specified measured errors are achieved in the optimum measuring range, but not over the entire measuring range.

chanhvinh.com

Power supply

Electrical connection

The electrical connection of the sensor to the transmitter is established using measuring cable CYK10.

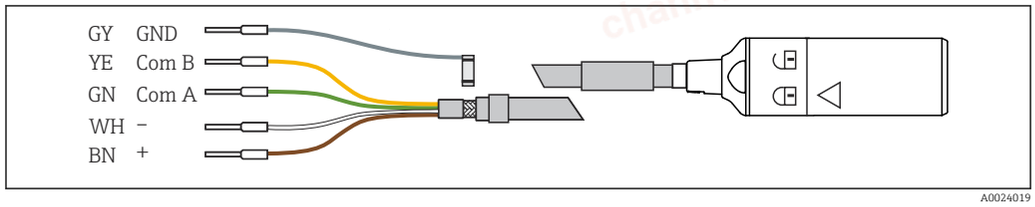

2 *Measuring cable CYK10*

Performance characteristics

Response time [1]

From air to nitrogen at reference operating conditions:
- t_{90} : < 30 s
- t_{98} : < 60 s

Reference operating conditions

Reference temperature:	20 °C (68 °F)
Reference pressure:	1013 hPa (15 psi)
Reference application:	Air-saturated water

Signal current in air

COS22E-**22***** (standard sensor):	40 to 100 nA
COS22E-**12***** (trace sensor):	210 to 451 nA

Zero current

COS22E-**22***** (standard sensor):	< 0.1 % of the signal current in air
COS22E-**12***** (trace sensor):	< 0.03 % of the signal current in air

Maximum measured error [2]

COS22E-**22 (standard sensor):	≤ ±1 % of the measured value or 10 ppb (the higher value is relevant)
COS22E-**12 (trace sensor):	≤ ±1 % of the measured value or 1 ppb (the higher value is relevant)

Limit of detection (LOD) [3]

COS22E-**22 (standard sensor):	5 ppb
COS22E-**12 (trace sensor):	1 ppb

Limit of quantification (LOQ) [3]

COS22E-**22 (standard sensor):	15 ppb
COS22E-**12 (trace sensor):	3 ppb

Repeatability

COS22E-**22 (standard sensor):	5 ppb
COS22E-**12 (trace sensor):	1 ppb

Long-term drift [4]

< 4 % per month in reference operating conditions
≤ 1 % per month in operation with reduced oxygen concentration (< 4 Vol% O_2)

Influence of the medium pressure

Pressure compensation via setting options on the transmitter.

1) Average of all sensors that have undergone a final inspection
2) In accordance with IEC 60746-1 at rated operating conditions
3) According to DIN EN ISO 15839. The measured error contains all the uncertainties of the sensor and transmitter (measuring chain). It does not contain all the uncertainties caused by the reference material and adjustments that may have been performed.
4) Under constant conditions

chanhvinh.com

Polarization time	COS22E-**22***** (standard sensor): COS22E-**12***** (trace sensor):	< 30 min for 98% signal value, 2 h for 100% < 3 h for 98% signal value, 12 h for 100%
Intrinsic oxygen consumption	COS22E-**22***** (standard sensor): COS22E-**12***** (trace sensor):	approx. 20 ng/h in air at 20 °C (68 °F) approx. 100 ng/h in air at 20 °C (68 °F)
Electrolyte	COS22E-**22***** (standard sensor): COS22E-**12***** (trace sensor):	basic electrolyte Neutral electrolyte
Operating time of the electrolyte	Theoretical operating time at p_{O2} = 210 mbar and T=20 °C (68 °F) COS22E-**22***** (standard sensor): COS22E -**12***** (trace sensor):	 > 1.5 years > 3 months
Temperature compensation	Temperature compensation takes place across the entire specified range for all measured variables.	

Mounting

Mounting instructions

Must be installed in a suitable assembly (depending on the application).

NOTICE

Installing the unit without an assembly carries the risk of cable breakage or sensor loss!

▶ Do not install the sensor freely suspended from the cable!

Orientation

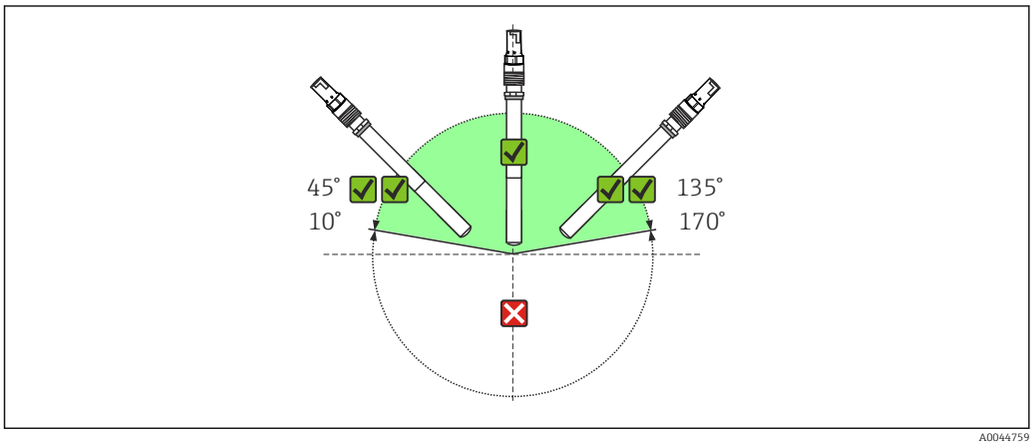

3 Permitted orientations

The sensor must be installed at an angle of inclination of 10 ° to 170 ° in an assembly, holder or suitable process connection. Recommended angle: 45° to prevent the attachment of air bubbles.

Inclination angles other than those mentioned are not permitted. Do **not** install the sensor upside down.

Follow the instructions for installing sensors in the Operating Instructions for the assembly used.

Installation examples

Permanent installation assembly Unifit CPA842

The permanent installation assembly CPA842 enables easy adaptation of a sensor to nearly any process connections from Ingold nozzles to Varivent or Tri-Clamp connections. This kind of installation is very well suited for tanks and larger pipes. This enables a defined immersion depth of the sensor into the medium in the simplest way.

chanhvinh.com

Flow assembly Flowfit CYA21 for water treatment and processes

The compact stainless steel assembly offers space for a 12-mm sensor with a length of 120 mm. The assembly has a low sampling volume and, with the 6-mm connections, it is best suited for residual oxygen measurement in water treatments and boiler feedwater. The flow comes from below.

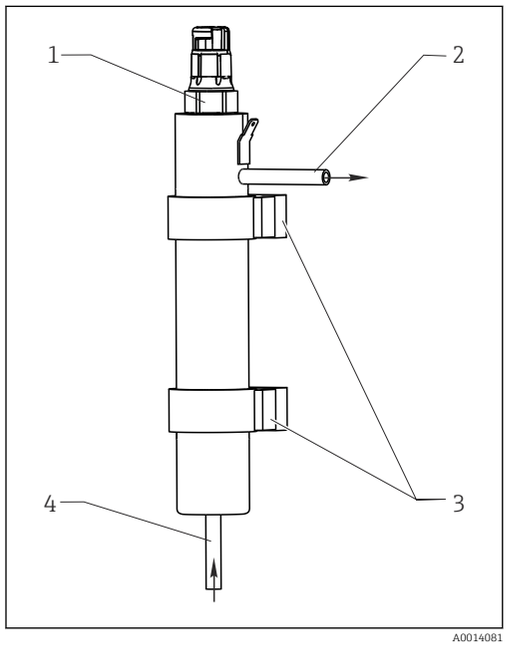

4 *Flow assembly*

1 *Installed sensorMemosens COS22E*
2 *Drain*
3 *Wall mount (clamp D29)*
4 *Inflow*

Retractable assembly Cleanfit CPA871 or Cleanfit CPA875

The assembly is designed for installation on vessels and pipes. This requires the availability of suitable process connections.

Install the assembly in a place with uniform flow conditions. The pipe diameter must be at least DN 80.

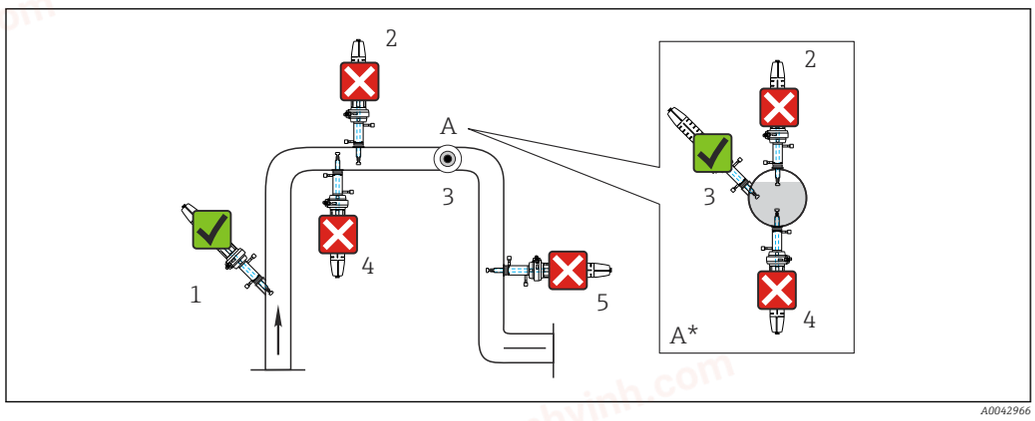

5 *Suitable and unsuitable installation positions for Memosens COS22E*

1 *Ascending pipe, best position*
2 *Horizontal pipe, sensor top down, impermissible due to air cushion or foam bubble forming*
3 *Horizontal pipe, lateral installation, with suitable installation angle*
4 *Upside-down installation, unsuitable*
5 *Down pipe, impermissible*
A *Detail A (top view)*
A* *Detail A, turned by 90° (side view)*

✓ *Possible installation angle*

✗ *Inadmissible installation angle*

chanhvinh.com

NOTICE

Sensor not fully immersed in the medium, buildup, upside-down installation

These can all cause incorrect measurements!

- Do not install assembly at points where air pockets or bubbles may form.
- Avoid buildup on the sensor membrane or remove it at regular intervals.
- Do not install sensor upside down.

Environment

Ambient temperature range

	Temperature range T4	Temperature range T6
COS22E	-25 °C ≤ T_a ≤ 70 °C (T4) -13 °F ≤ T_a ≤ 158 °F	-25 °C ≤ T_a ≤ 70 °C (T6) -13 °F ≤ T_a ≤ 158 °F

The temperature range may differ for Ex versions. The XA "Safety instructions for electrical equipment in hazardous areas" for the product must be followed.

Storage temperature range

-25 to 50 °C (77 to 120 °F)

NOTICE

Danger of sensor drying out!

- Store the sensor with the watering cap only (filled with tap water).

Degree of protection

IP68 (2 m (6.5 ft) water column, 21 °C (70 °F), 24 hours)

IP69

Relative humidity

0 to 100%

Process

Process temperature range

	Temperature range T4	Temperature range T6
COS22E	-5 ≤ T_p ≤ 100 °C (T4)	-5 ≤ T_p ≤ 70 °C (T6)

The temperature range may differ for Ex versions. The XA "Safety instructions for electrical equipment in hazardous areas" for the product must be followed.

Process pressure range

Ambient pressure ... 12 bar (... 174 psi) absolute

chanhvinh.com

Temperature/pressure ratings

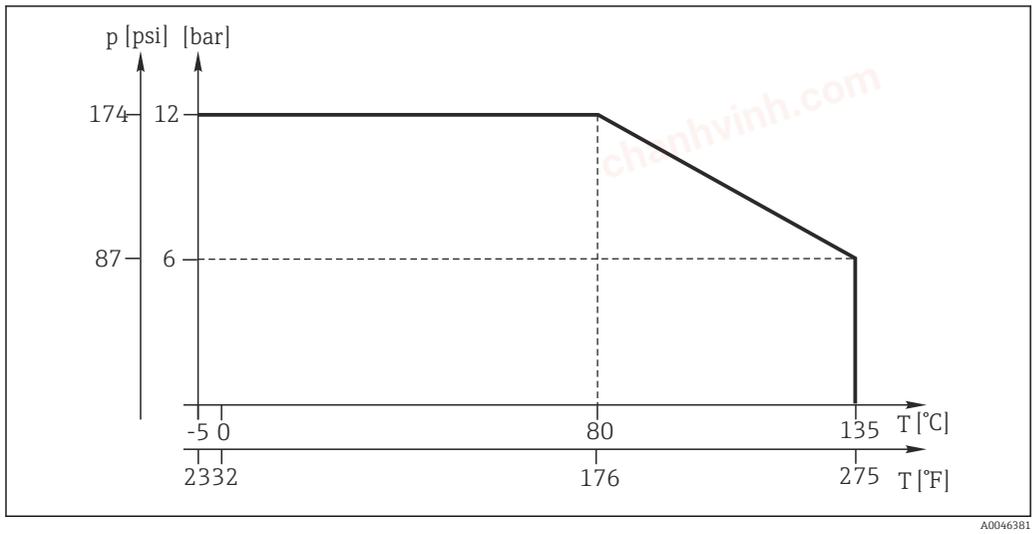

Minimum flow

COS22E-**22***** (standard sensor):	0.02 m/s (0.07 ft/s)
COS22E-**12***** (trace sensor):	0.1 m/s (0.33 ft/s)

Chemical resistance

Parts in contact with the medium are chemically resistant to:
- Diluted acids and alkalis
- Hot water and superheated steam up to max. 140 °C (284 °F) during sterilization
- CO_2 up to 100 %, only with trace sensor COS22E-**12*****

NOTICE

Hydrogen sulfide and ammonia shorten the operating life of the sensor!

▶ Do not use the sensor in applications where it is exposed to hydrogen sulfide or ammonia vapors.

CIP compatibility

Yes

SIP compatibility

Yes, max. 140 °C (284 °F)

Autoclavability

Yes, max. 140 °C (284 °F), 30 min

Cross-sensitivity

COS22E-**12/22

Molecular hydrogen causes false low readings and can, in a worst-case scenario, result in total failure of the sensor.
For a sensor version that is resistant to hydrogen, contact the Endress+Hauser sales team.

Mechanical construction

Dimensions

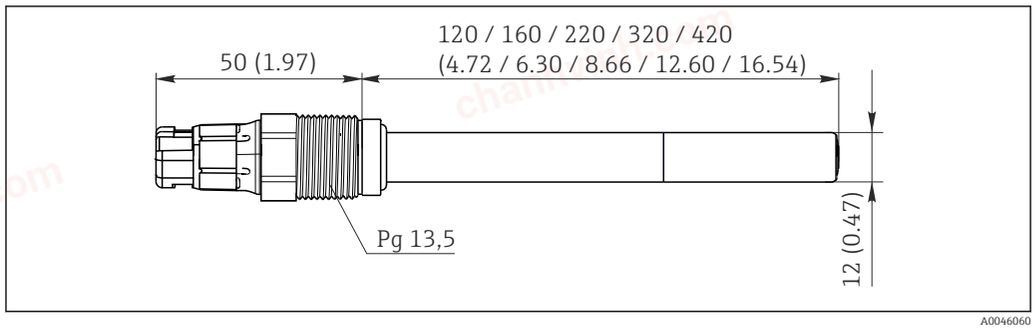

6 *Dimensions in mm (inch)*

chanhvinh.com

Optional flow assembly CYA21 for sensors with Ø 12 mm (accessories)

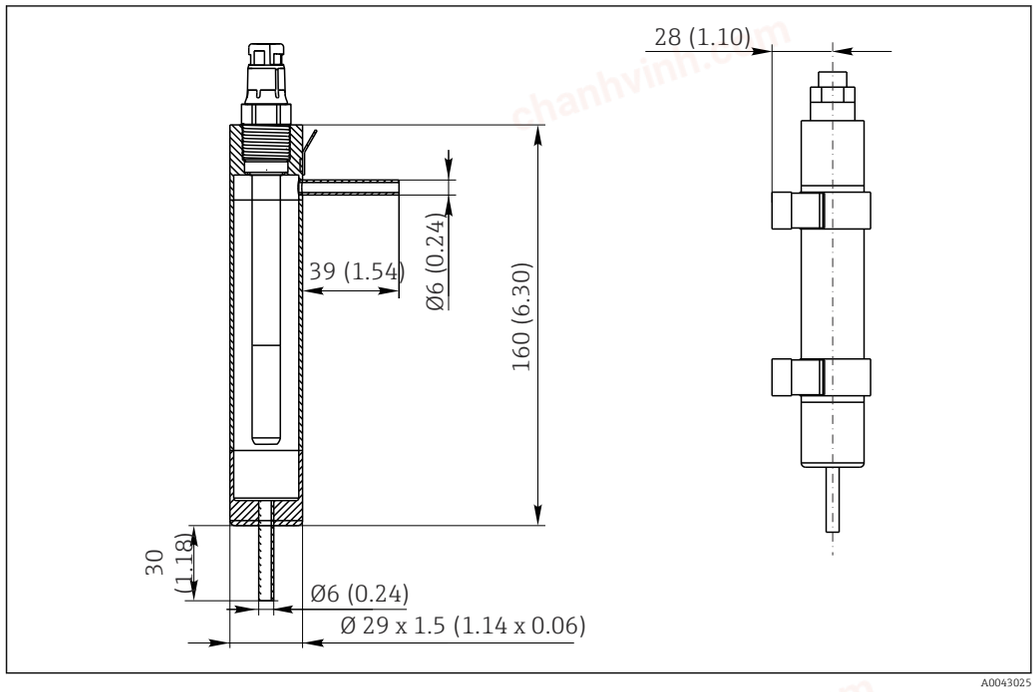

7 *Dimensions in mm (inch)*

Weight	Depending on the design (length) 0.2 kg (0.44 lbs) to 0.7 kg (1.54 lbs)

Materials

Parts in contact with medium

Sensor shaft	Stainless steel 1.4435 (AISI 316L)
Process seal	FKM (USP<87>, <88> Class VI and FDA)
Process seal for Ex versions	FKM (not FDA-compliant)
Seals/O-rings	EPDM (USP<87>, <88> Class VI and FDA), FKM (FDA)
Shaft sleeve	Stainless steel 1.4435 (AISI 316L) or titanium or Hastelloy
Top layer of membrane	Silicone (USP<87>, <88> Class VI and FDA)

Process connection	Pg 13.5 Torque max. 3 Nm
Surface roughness	R_a < 0.38 µm
Temperature sensor	NTC 22 kΩ

Certificates and approvals

Current certificates and approvals for the product are available via the Product Configurator at www.endress.com.

1. Select the product using the filters and search field.
2. Open the product page.

The **Configuration** button opens the Product Configurator.

chanhvinh.com

Ordering information

Product page

www.endress.com/cos22e

Product Configurator

On the product page there is a **Configure** button to the right of the product image.

1. Click this button.
   ↳ The Configurator opens in a separate window.
2. Select all the options to configure the device in line with your requirements.
   ↳ In this way, you receive a valid and complete order code for the device.
3. Export the order code as a PDF or Excel file. To do so, click the appropriate button on the right above the selection window.

For many products you also have the option of downloading CAD or 2D drawings of the selected product version. Click the **CAD** tab for this and select the desired file type using picklists.

Scope of delivery

The scope of delivery comprises:
- Ordered version of the sensor with protection cap (filled with tap water) to protect the membrane
- Electrolyte, 1 bottle, 10 ml (0.34 fl.oz.)
- Tool to push out the membrane body
- Optional certificates that have been ordered
- Safety instructions for the hazardous area (for sensors with Ex approval)
- Brief Operating Instructions

Accessories

The following are the most important accessories available at the time this documentation was issued.

▶ For accessories not listed here, please contact your Service or Sales Center.

Device-specific accessories

Assemblies (selection)

Cleanfit CPA875
- Retractable process assembly for sterile and hygienic applications
- For in-line measurement with standard sensors with 12 mm diameter, e.g. for pH, ORP, oxygen
- Product Configurator on the product page: www.endress.com/cpa875

Technical Information TI01168C

Cleanfit CPA871
- Flexible process retractable assembly for water, wastewater and the chemical industry
- For applications with standard sensors with 12 mm diameter
- Product Configurator on the product page: www.endress.com/cpa871

Technical Information TI01191C

Unifit CPA842
- Installation assembly for food, biotechnology and pharmaceutics
- With EHEDG and 3A certificate
- Product Configurator on the product page: www.endress.com/cpa842

Technical Information TI00306C

Flowfit CPA240
- pH/redox flow assembly for processes with stringent requirements
- Product Configurator on the product page: www.endress.com/cpa240

Technical Information TI00179C

chanhvinh.com

Flowfit CYA21
- Universal assembly for analysis systems in industrial utilities
- Product Configurator on the product page: www.endress.com/CYA21

Technical Information TI01441C

Measuring cable

Memosens data cable CYK10
- For digital sensors with Memosens technology
- Product Configurator on the product page: www.endress.com/cyk10

Technical Information TI00118C

Memosens laboratory cable CYK20
- For digital sensors with Memosens technology
- Product Configurator on the product page: www.endress.com/cyk20

Memosens data cable CYK11
- Extension cable for digital sensors with Memosens protocol
- Product Configurator on the product page: www.endress.com/cyk11

Technical Information TI00118C

Zero-point gel

COY8

Zero-point gel for oxygen and disinfection sensors
- Oxygen-free and chlorine-free gel for the verification, zero point calibration and adjustment of oxygen and disinfection measuring points
- Product Configurator on the product page: www.endress.com/coy8

Technical Information TI01244C

Transmitter

Liquiline CM44
- Modular multi-channel transmitter for hazardous and non-hazardous areas
- HART®, PROFIBUS, Modbus or EtherNet/IP is possible
- Order according to product structure

Technical Information TI00444C

Liquiline CM42
- Modular two-wire transmitter for hazardous and non-hazardous areas
- HART®, PROFIBUS or FOUNDATION Fieldbus is possible
- Order according to product structure

Technical Information TI00381C

Liquiline Mobile CML18
- Multiparameter mobile device for laboratory and field
- Reliable transmitter with display and app connection
- Product Configurator on the product page: www.endress.com/CML18

Operating Instructions BA02002C

Liquiline Compact CM82
- Configurable 1-channel multiparameter transmitter for Memosens sensors
- Ex- and non-ex applications possible in all industries
- Product Configurator on the product page: www.endress.com/CM82

Technical Information TI01397C

chanhvinh.com

Liquiline Compact CM72
- 1-channel single parameter field device for Memosens sensors
- Ex- and non-ex applications possible in all industries
- Product Configurator on the product page: www.endress.com/CM72

Technical Information TI01409C

Memosens analog converter CYM17
- Converter for Memosens sensors
- Enables the simple use of digital Memosens sensors in fermentation applications in the laboratory
- Product Configurator on the product page: www.endress.com/cym17

Operating Instructions BA01833C

Memobase Plus CYZ71D
- PC software to support laboratory calibration
- Visualization and documentation of sensor management
- Sensor calibrations stored in database
- Product Configurator on the product page: www.endress.com/cyz71d

Technical Information TI00502C

Maintenance kit

Maintenance kit COS22Z
- Maintenance kit for COS22D and COS22E
- Scope of supply of maintenance kit COS22Z is based on the configuration:
  - 10 or 3 membrane bodies
  - O-ring mounting tool
  - O-rings
  - Electrolyte
  - Internal body
  - Shaft sleeve
  - Optionally ordered certificates, manufacturer inspection certificate
  - Ordering information: www.endress.com/cos22e under "Accessories/Spare parts"

71556089

Endress+Hauser
People for Process Automation