chanhvinh.com

TI01332D/06/EN/02.20
71483623
2020-06-01

Technical Information
Proline Prowirl D 200

Vortex flowmeter



Cost-effective wafer-flange measuring device, available in compact or remote version

Application

- Preferred measuring principle for wet/saturated/ superheated steam, gases & liquids (also cryogenic)
- For all basic applications and for 1-to-1 replacement of orifice plates

Device properties

- Face-to-face length of 65 mm (2.56 in)
- No flanges
- Low weight
- Display module with data transfer function
- Robust dual-compartment housing
- Plant safety: worldwide approvals (SIL, Haz. area)

Your benefits

- Integrated temperature measurement for mass/energy flow of saturated steam
- Easy alignment of the sensor – included centering rings
- High availability – proven robustness, resistance to vibrations, temperature shocks & water hammer
- Long-term stability – robust drift-free capacitive sensor
- Convenient device wiring – separate connection compartment
- Safe operation – no need to open the device due to display with touch control, background lighting
- Integrated verification – Heartbeat Technology

Endress+Hauser
People for Process Automation

chanhvinh.com

Table of contents

About this document 3
Symbols 3

Function and system design 4
Measuring principle 4
Measuring system 7

Input 7
Measured variable 7
Measuring range 8
Operable flow range 12
Input signal 12

Output 13
Output signal 13
Signal on alarm 15
Load 16
Ex connection data 17
Low flow cut off 21
Galvanic isolation 22
Protocol-specific data 22

Power supply 23
Terminal assignment 23
Pin assignment, device plug 26
Supply voltage 26
Power consumption 27
Current consumption 28
Power supply failure 28
Electrical connection 28
Potential equalization 33
Terminals 33
Cable entries 33
Cable specification 33
Overvoltage protection 34

Performance characteristics 35
Reference operating conditions 35
Maximum measured error 35
Repeatability 38
Response time 38
Influence of ambient temperature 38

Installation 38
Mounting location 38
Orientation 38
Inlet and outlet runs 39
Mounting kit for disc (wafer version) 41
Length of connecting cable 42
Mounting the transmitter housing 42
Special mounting instructions 43

Environment 44
Ambient temperature range 44
Storage temperature 44
Climate class 44
Degree of protection 44
Vibration- and shock-resistance 45
Electromagnetic compatibility (EMC) 45

Process 45
Medium temperature range 45
Pressure-temperature ratings 46
Nominal pressure of sensor 47
Pressure loss 47
Thermal insulation 47

Mechanical construction 48
Dimensions in SI units 48
Dimensions in US units 54
Weight 58
Materials 61

Operability 64
Operating concept 64
Languages 64
Local operation 64
Remote operation 65
Service interface 67

Certificates and approvals 67
CE mark 68
RCM-tick symbol 68
Ex approval 68
Functional safety 70
HART certification 70
FOUNDATION Fieldbus certification 70
Certification PROFIBUS 70
Pressure Equipment Directive 70
Experience 71
Other standards and guidelines 71

Ordering information 71
Product generation index 71

Application packages 71
Diagnostics functions 72
Heartbeat Technology 72

Accessories 72
Device-specific accessories 73
Communication-specific accessories 74
Service-specific accessories 75
System components 76

Supplementary documentation 76
Standard documentation 76
Supplementary device-dependent documentation 77

Registered trademarks 77

chanhvinh.com

About this document

Symbols

Electrical symbols

Symbol	Meaning
⎓	Direct current
~	Alternating current
⎓~	Direct current and alternating current
⏚	**Ground connection** A grounded terminal which, as far as the operator is concerned, is grounded via a grounding system.
⊜	**Protective Earth (PE)** A terminal which must be connected to ground prior to establishing any other connections. The ground terminals are situated inside and outside the device: ▪ Inner ground terminal: Connects the protectiv earth to the mains supply. ▪ Outer ground terminal: Connects the device to the plant grounding system.

Communication symbols

Symbol	Meaning
	**Wireless Local Area Network (WLAN)** Communication via a wireless, local network.

Symbols for certain types of information

Symbol	Meaning
	**Permitted** Procedures, processes or actions that are permitted.
	**Preferred** Procedures, processes or actions that are preferred.
	**Forbidden** Procedures, processes or actions that are forbidden.
	**Tip** Indicates additional information.
	Reference to documentation.
	Reference to page.
	Reference to graphic.
	Visual inspection.

Symbols in graphics

Symbol	Meaning
1, 2, 3, ...	Item numbers
1., 2., 3., ...	Series of steps
A, B, C, ...	Views
A-A, B-B, C-C, ...	Sections

chanhvinh.com

Symbol	Meaning
	Hazardous area
	Safe area (non-hazardous area)
	Flow direction

Function and system design

Measuring principle

Vortex meters work on the principle of the *Karman vortex street*. When fluid flows past a bluff body, vortices are alternately formed on both sides with opposite directions of rotation. These vortices each generate a local low pressure. The pressure fluctuations are recorded by the sensor and converted to electrical pulses. The vortices develop very regularly within the permitted application limits of the device. Therefore, the frequency of vortex shedding is proportional to the volume flow.

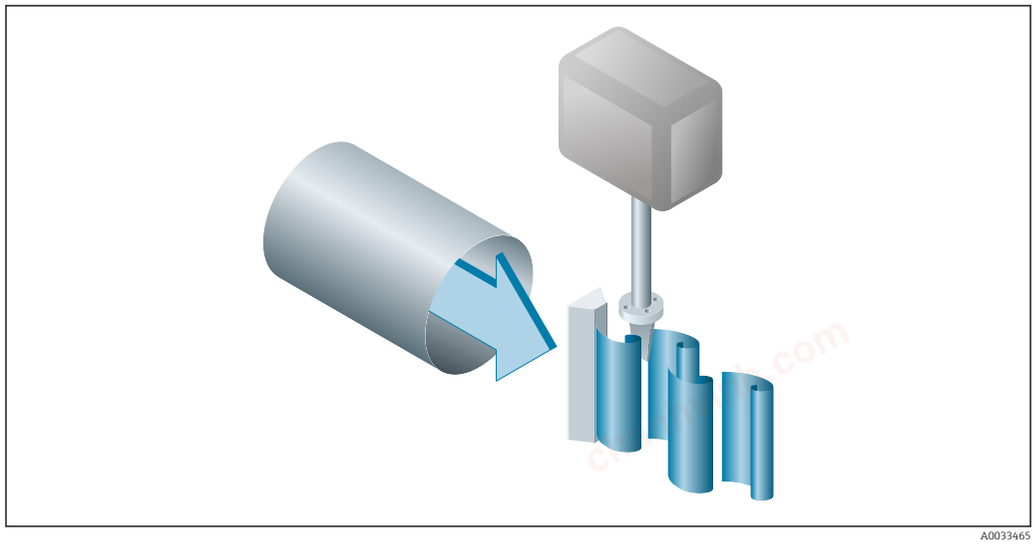

A0033465

1 Sample graphic

The calibration factor (K-factor) is used as the proportional constant:

$$\text{K-Factor} = \frac{\text{Pulses}}{\text{Unit Volume } [m^3]}$$

A0003939-EN

Within the application limits of the device, the K-factor only depends on the geometry of the device. It is for Re > 20 000:

- Independent of the flow velocity and the fluid properties viscosity and density
- Independent of the type of substance under measurement: steam, gas or liquid

The primary measuring signal is linear to the flow. After production, the K-factor is determined in the factory by means of calibration. It is not subject to long-time drift or zero-point drift.

The device does not contain any moving parts and does not require any maintenance.

The capacitance sensor

The sensor of a vortex flowmeter has a major influence on the performance, robustness and reliability of the entire measuring system.

chanhvinh.com

The robust DSC sensor is:
- burst-tested
- tested against vibrations
- tested against thermal shock (thermal shocks of 150 K/s)

The measuring device uses the tried-and-tested, capacitance measuring technology from Endress+Hauser, which is already in use in over 450 000 measuring points worldwide. Thanks to its design, the capacitance sensor is also particularly mechanically resistant to temperature shocks and pressure shocks in steam pipelines.

Temperature measurement

The "mass" option is available under the order code for "Sensor version". With this option the measuring device can also measure the temperature of the medium.

The temperature is measured via Pt 1000 temperature sensors. These are located in the paddle of the DSC sensor and are therefore in the direct vicinity of the fluid.

Order code for "Sensor version; DSC sensor; measuring tube":
- Option AA "volume; 316L; 316L"
- Option BA "volume high-temperature; 316L; 316L"
- Option CA "Mass; 316L; 316L (integrated temperature measurement)"

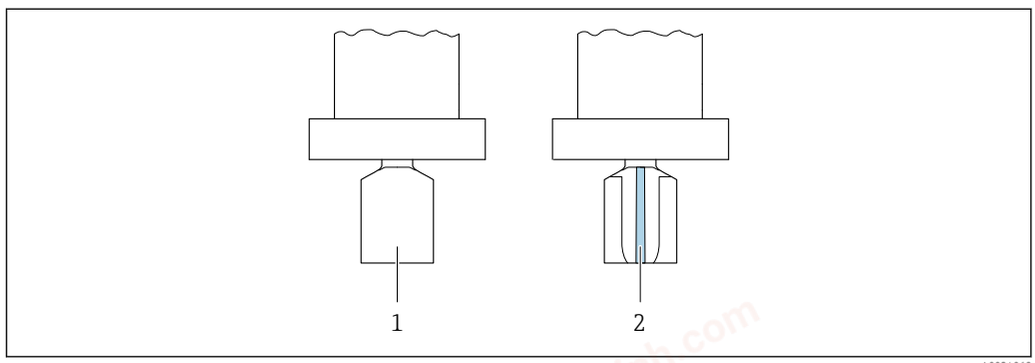

A0034068

1 Order code for "Sensor version", option "volume" or "volume high-temperature"
2 Order code for "Sensor version", option "mass"

Lifelong calibration

Experience has shown that recalibrated measuring devices demonstrate a very high degree of stability compared to their original calibration: The recalibration values were all within the original measuring accuracy specifications of the devices. This applies to the measured volume flow, the device's primary measured variable.

Various tests and simulation have shown that once the radii of the edges on the bluff body are less than 1 mm (0.04 in), the resulting effect does not have a negative impact on accuracy.

If the radii of the edges on the bluff body do not exceed 1 mm (0.04 in), the following general statements apply (in the case of non-abrasive and non-corrosive media, such as in most water and steam applications):
- The measuring device does not display an offset in the calibration and the accuracy is still guaranteed.
- All the edges on the bluff body have a radius that is typically smaller in size. As the measuring devices are naturally also calibrated with these radii, the measuring device remains within the specified accuracy rating provided that the additional radius that is produced as a result of wear and tear does not exceed 1 mm (0.04 in).

Consequently, it can be said that the product line offers lifelong calibration if the measuring device is used in non-abrasive and non-corrosive media.

Air and industrial gases

The measuring device enables users to calculate the density and energy of air and industrial gases. The calculations are based on time-tested standard calculation methods. It is possible to automatically compensate for the effect of pressure and temperature via an external or constant value.

chanhvinh.com

This makes it possible to output the energy flow, standard volume flow and mass flow of the following gases:
- Single gas
- Gas mixture
- Air
- User-specific gas

For detailed information on the parameters, see the Operating Instructions.→ 76

Natural gas

The device enables users to calculate the chemical properties (gross calorific value, net calorific value) of natural gases. The calculations are based on time-tested standard calculation methods. It is possible to automatically compensate for the effect of pressure and temperature via an external or constant value.

This makes it possible to output the energy flow, standard volume flow and mass flow in accordance with the following standard methods:

Energy can be calculated based on the following standards:
- AGA5
- ISO 6976
- GPA 2172

Density can be calculated based on the following standards:
- ISO 12213-2 (AGA8-DC92)
- ISO 12213-3
- AGA NX19
- AGA8 Gross 1
- SGERG 88

For detailed information on the parameters, see the Operating Instructions.→ 76

chanhvinh.com

Measuring system

The device consists of a transmitter and a sensor.

Two device versions are available:
- Compact version – transmitter and sensor form a mechanical unit.
- Remote version - transmitter and sensor are mounted in separate locations.

Transmitter

Proline 200 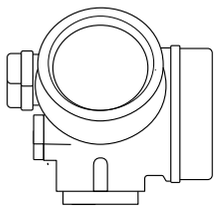 A0013471	Device versions and materials: ▪ Compact or remote version, aluminum coated: Aluminum, AlSi10Mg, coated ▪ Compact or remote version, stainless: For maximum corrosion resistance: stainless steel CF3M Configuration: ▪ Via four-line local display with key operation or via four-line, illuminated local display with touch control and guided menus ("Make-it-run" wizards) for applications ▪ Via operating tools (e.g. FieldCare)

Sensor

Prowirl D 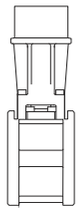 A0009922	Disc (wafer version): ▪ Nominal diameter range: DN 15 to 150 (½ to 6") ▪ Materials: Measuring tubes: stainless steel, CF3M/1.4408

Input

Measured variable

Direct measured variables

Order code for "Sensor version; DSC sensor; measuring tube"		
Option	**Description**	**Measured variable**
AA	Volume; 316L; 316L	Volume flow
BA	Volume high-temperature; 316L; 316L	

Order code for "Sensor version; DSC sensor; measuring tube"		
Option	**Description**	**Measured variable**
CA	Mass; 316L; 316L (integrated temperature measurement)	▪ Volume flow ▪ Temperature

chanhvinh.com

Calculated measured variables

Order code for "Sensor version; DSC sensor; measuring tube"		
Option	**Description**	**Measured variable**
AA	Volume; 316L; 316L	Under constant process conditions: ▪ Mass flow [1] ▪ Corrected volume flow The totalized values for: ▪ Volume flow ▪ Mass flow ▪ Corrected volume flow
BA	Volume high-temperature; 316L; 316L	

1) A fixed density must be entered for calculating the mass flow (**Setup** menu → **Advanced setup** submenu → **External compensation** submenu → **Fixed density** parameter).

Order code for "Sensor version; DSC sensor; measuring tube"		
Option	**Description**	**Measured variable**
CA	Mass; 316L; 316L (integrated temperature measurement)	▪ Corrected volume flow ▪ Mass flow ▪ Calculated saturated steam pressure ▪ Energy flow ▪ Heat flow difference ▪ Specific volume ▪ Degrees of superheat

Measuring range

The measuring range is dependent on the nominal diameter, the fluid and environmental influences.

The following specified values are the largest possible flow measuring ranges (Q_{min} to Q_{max}) for each nominal diameter. Depending on the fluid properties and environmental influences, the measuring range may be subject to additional restrictions. Additional restrictions apply to both the lower range value and the upper range value.

Flow measuring ranges in SI units

DN [mm]	Liquids [m³/h]	Gas/steam [m³/h]
15	0.06 to 4.9	0.3 to 25
25	0.18 to 15	0.9 to 130
40	0.45 to 37	2.3 to 310
50	0.75 to 62	3.8 to 820
80	1.7 to 140	8.5 to 1 800
100	2.9 to 240	15 to 3 200
150	6.7 to 540	33 to 7 300

Flow measuring ranges in US units

DN	Liquids	Gas/steam
[in]	[ft³/min]	[ft³/min]
½	0.035 to 2.9	0.18 to 15
1	0.11 to 8.8	0.54 to 74
1½	0.27 to 22	1.3 to 180
2	0.44 to 36	2.2 to 480
3	1 to 81	5 to 1 100
4	1.7 to 140	8.7 to 1 900
6	3.9 to 320	20 to 4 300

chanhvinh.com

Flow velocity

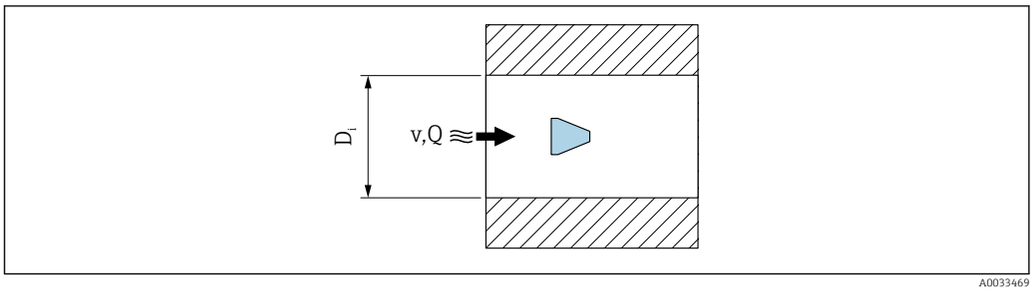

A0033469

D_i *Internal diameter of measuring tube (corresponds to dimension K→ 48)*
v *Velocity in mating pipe*
Q *Flow*

The internal diameter of measuring tube D_i is denoted in the dimensions as dimension K.→ 48.

Calculation of flow velocity:

$$v\ [m/s] = \frac{4 \cdot Q\ [m^3/h]}{\pi \cdot D_i\ [m]^2} \cdot \frac{1}{3600\ [s/h]}$$

$$v\ [ft/s] = \frac{4 \cdot Q\ [ft^3/min]}{\pi \cdot D_i\ [ft]^2} \cdot \frac{1}{60\ [s/min]}$$

A0034301

Lower range value

A restriction applies to the lower range value due to the turbulent flow profile, which only occurs with Reynolds numbers greater than 5 000. The Reynolds number is dimensionless and indicates the ratio of the inertia force of a fluid to its viscous force when flowing and is used as a characteristic variable for pipe flows. In the case of pipe flows with Reynolds numbers less than 5 000, periodic vortices are no longer generated and flow rate measurement is no longer possible.

The Reynolds number is calculated as follows:

$$Re = \frac{4 \cdot Q\ [m^3/s] \cdot \rho\ [kg/m^3]}{\pi \cdot D_i\ [m] \cdot \mu\ [Pa \cdot s]}$$

$$Re = \frac{4 \cdot Q\ [ft^3/s] \cdot \rho\ [lbm/ft^3]}{\pi \cdot D_i\ [ft] \cdot \mu\ [lbf \cdot s/ft^2]}$$

A0034291

Re	*Reynolds number*
Q	*Flow*
D_i	*Internal diameter of measuring tube (corresponds to dimension K→ 48)*
μ	*Dynamic viscosity*
ρ	*Density*

The Reynolds number, 5 000 together with the density and viscosity of the fluid and the nominal diameter, is used to calculate the corresponding flow rate.

chanhvinh.com

$$Q_{Re = 5000}\ [m^3/h] = \frac{5000 \cdot \pi \cdot D_i\ [m] \cdot \mu\ [Pa \cdot s]}{4 \cdot \rho\ [kg/m^3]} \cdot 3600\ [s/h]$$

$$Q_{Re = 5000}\ [ft^3/h] = \frac{5000 \cdot \pi \cdot D_i\ [ft] \cdot \mu\ [lbf \cdot s/ft^2]}{4 \cdot \rho\ [lbm/ft^3]} \cdot 60\ [s/min]$$

A0034302

$Q_{Re = 5000}$	*Flow rate is dependent on the Reynolds number*
D_i	*Internal diameter of measuring tube (corresponds to dimension K→ 48)*
μ	*Dynamic viscosity*
ρ	*Density*

The measuring signal must have a certain minimum signal amplitude so that the signals can be evaluated without any errors. Using the nominal diameter, the corresponding flow can also be derived from this amplitude. The minimum signal amplitude depends on the setting for the sensitivity of the DSC sensor (s), the steam quality (x) and the force of the vibrations present (a). The value mf corresponds to the lowest measurable flow velocity without vibration (no wet steam) at a density of 1 kg/m^3 (0.0624 lbm/ft^3). The value mf can be set in the range from 6 to 20 m/s (1.8 to 6 ft/s) (factory setting 12 m/s (3.7 ft/s)) with the **Sensitivity** parameter (value range 1 to 9, factory setting 5).

$$v_{AmpMin}\ [m/s] = \max \left\{ \frac{mf\ [m/s]}{x^2} \bullet \sqrt{\frac{1\ [kg/m^3]}{\rho\ [kg/m^3]}} \right.$$

$$v_{AmpMin}\ [ft/s] = \max \left\{ \frac{mf\ [ft/s]}{x^2} \bullet \sqrt{\frac{0.062\ [lb/ft^3]}{\rho\ [lb/ft^3]}} \right.$$

A0034303

v_{AmpMin}	*Minimum measurable flow velocity based on signal amplitude*
mf	*Sensitivity*
x	*Steam quality*
ρ	*Density*

$$Q_{AmpMin}\ [m^3/h] = \frac{v_{AmpMin}\ [m/s] \cdot \pi \cdot D_i\ [m]^2}{4 \cdot \sqrt{\frac{\rho\ [kg/m^3]}{1\ [kg/m^3]}}} \cdot 3600\ [s/h]$$

$$Q_{AmpMin}\ [ft^3/min] = \frac{v_{AmpMin}\ [ft/s] \cdot \pi \cdot D_i\ [ft]^2}{4 \cdot \sqrt{\frac{\rho\ [lbm/ft^3]}{0.0624\ [lbm/ft^3]}}} \cdot 60\ [s/min]$$

A0034304

Q_{AmpMin}	*Minimum measurable flow rate based on signal amplitude*
v_{AmpMin}	*Minimum measurable flow velocity based on signal amplitude*
D_i	*Internal diameter of measuring tube (corresponds to dimension K→ 48)*
ρ	*Density*

chanhvinh.com

The effective lower range value Q_{Low} is determined using the largest of the three values Q_{min}, $Q_{Re = 5000}$ and Q_{AmpMin}.

$$Q_{Low}\,[m^3/h] = \max \begin{cases} Q_{min}\,[m^3/h] \\ Q_{Re = 5000}\,[m^3/h] \\ Q_{AmpMin}\,[m^3/h] \end{cases}$$

$$Q_{Low}\,[ft^3/min] = \max \begin{cases} Q_{min}\,[ft^3/min] \\ Q_{Re = 5000}\,[ft^3/min] \\ Q_{AmpMin}\,[ft^3/min] \end{cases}$$

A0034313

Q_{Low}	*Effective lower range value*
Q_{min}	*Minimum measurable flow rate*
$Q_{Re = 5000}$	*Flow rate is dependent on the Reynolds number*
Q_{AmpMin}	*Minimum measurable flow rate based on signal amplitude*

The Applicator is available for calculation purposes.

Upper range value

The measuring signal amplitude must be below a certain limit value to ensure that the signals can be evaluated without error. This results in a maximum permitted flow rate Q_{AmpMax}:

$$Q_{AmpMax}\,[m^3/h] = \frac{350\,[m/s] \cdot \pi \cdot D_i\,[m]^2}{4 \cdot \sqrt{\frac{\rho\,[kg/m^3]}{1\,[kg/m^3]}}} \cdot 3600\,[s/h]$$

$$Q_{AmpMax}\,[ft^3/min] = \frac{1148\,[ft/s] \cdot \pi \cdot D_i\,[ft]^2}{4 \cdot \sqrt{\frac{\rho\,[lbm/ft^3]}{0.0624\,[lbm/ft^3]}}} \cdot 60\,[s/min]$$

A0034316

Q_{AmpMax}	*Maximum measurable flow rate based on signal amplitude*
D_i	*Internal diameter of measuring tube (corresponds to dimension K→ 48)*
ρ	*Density*

For gas applications, an additional restriction applies to the upper range value with regard to the Mach number in the measuring device, which must be less than 0.3. The Mach number Ma describes the ratio of the flow velocity v to the sound velocity c in the fluid.

$$Ma = \frac{v\,[m/s]}{c\,[m/s]}$$

$$Ma = \frac{v\,[ft/s]}{c\,[ft/s]}$$

A0034321

chanhvinh.com

Ma	*Mach number*
v	*Flow velocity*
c	*Sound velocity*

The corresponding flow rate can be derived using the nominal diameter.

$$Q_{Ma=0.3}\ [m^3/h] = \frac{0.3 \cdot c\ [m/s] \cdot \pi \cdot D_i\ [m]^2}{4} \cdot 3600\ [s/h]$$

$$Q_{Ma=0.3}\ [ft^3/min] = \frac{0.3 \cdot c\ [ft/s] \cdot \pi \cdot D_i\ [ft]^2}{4} \cdot 60\ [s/min]$$

A0034337

$Q_{Ma=0.3}$	*Restricted upper range value is dependent on Mach number*
c	*Sound velocity*
D_i	*Internal diameter of measuring tube (corresponds to dimension K→ 48)*
ρ	*Density*

The effective upper range value Q_{High} is determined using the smallest of the three values Q_{max}, Q_{AmpMax} and $Q_{Ma=0.3}$.

$$Q_{High}\ [m^3/h] = \min \begin{cases} Q_{max}\ [m^3/h] \\ Q_{AmpMax}\ [m^3/h] \\ Q_{Ma=0.3}\ [m^3/h] \end{cases}$$

$$Q_{High}\ [ft^3/min] = \min \begin{cases} Q_{max}\ [ft^3/min] \\ Q_{AmpMax}\ [ft^3/min] \\ Q_{Ma=0.3}\ [ft^3/min] \end{cases}$$

A0034338

Q_{High}	*Effective upper range value*
Q_{max}	*Maximum measurable flow rate*
Q_{AmpMax}	*Maximum measurable flow rate based on signal amplitude*
$Q_{Ma=0.3}$	*Restricted upper range value is dependent on Mach number*

For liquids, the occurrence of cavitation may also restrict the upper range value.

The Applicator is available for calculation purposes.

Operable flow range

The value, which is typically up to 49: 1, may vary depending on the operating conditions (ratio between upper range value and lower range value)

Input signal

Current input

Current input	4-20 mA (passive)
Resolution	1 µA
Voltage drop	Typically: 2.2 to 3 V for 3.6 to 22 mA

chanhvinh.com

Maximum voltage	≤ 35 V
Possible input variables	▪ Pressure ▪ Temperature ▪ Density

External measured values

To increase the accuracy of certain measured variables or to calculate the corrected volume flow, the automation system can continuously write different measured values to the measuring device:
- Operating pressure to increase accuracy (Endress+Hauser recommends the use of a pressure measuring device for absolute pressure, e.g. Cerabar M or Cerabar S)
- Medium temperature to increase accuracy (e.g. iTEMP)
- Reference density for calculating the corrected volume flow

- Various pressure measuring devices can be ordered as accessories from Endress+Hauser.
- If using pressure measuring devices, pay attention to outlet runs when installing external devices→ 41.

If the device does not have temperature compensation, it is recommended that external pressure measurement values be read in so that the following measured variables can be calculated:
- Energy flow
- Mass flow
- Corrected volume flow

Current input

The measured values are written from the automation system to the measuring device via the current input → 12.

HART protocol

The measured values are written from the automation system to the measuring device via the HART protocol. The pressure transmitter must support the following protocol-specific functions:
- HART protocol
- Burst mode

Digital communication

The measured values can be written from the automation system to the measuring via:
- FOUNDATION Fieldbus
- PROFIBUS PA

Output

Output signal

Current output

Current output 1	4-20 mA HART (passive)
Current output 2	4-20 mA (passive)
Resolution	< 1 µA
Damping	Adjustable: 0.0 to 999.9 s
Assignable measured variables	▪ Volume flow ▪ Corrected volume flow ▪ Mass flow ▪ Flow velocity ▪ Temperature ▪ Pressure ▪ Calculated saturated steam pressure ▪ Total mass flow ▪ Energy flow ▪ Heat flow difference

chanhvinh.com

Pulse/frequency/switch output

Function	Can be set to pulse, frequency or switch output
Version	Passive, open collector
Maximum input values	▪ DC 35 V ▪ 50 mA For information on the Ex connection values → 17
Voltage drop	▪ For ≤ 2 mA: 2 V ▪ For 10 mA: 8 V
Residual current	≤ 0.05 mA
Pulse output	
Pulse width	Adjustable: 5 to 2 000 ms
Maximum pulse rate	100 Impulse/s
Pulse value	Adjustable
Assignable measured variables	▪ Mass flow ▪ Volume flow ▪ Corrected volume flow ▪ Total mass flow ▪ Energy flow ▪ Heat flow difference
Frequency output	
Output frequency	Adjustable: 0 to 1 000 Hz
Damping	Adjustable: 0 to 999 s
Pulse/pause ratio	1:1
Assignable measured variables	▪ Volume flow ▪ Corrected volume flow ▪ Mass flow ▪ Flow velocity ▪ Temperature ▪ Calculated saturated steam pressure ▪ Total mass flow ▪ Energy flow ▪ Heat flow difference ▪ Pressure
Switch output	
Switching behavior	Binary, conductive or non-conductive
Switching delay	Adjustable: 0 to 100 s
Number of switching cycles	Unlimited

Assignable functions	▪ Off
	▪ On
	▪ Diagnostic behavior
	▪ Limit value
	  ▪ Volume flow
	  ▪ Corrected volume flow
	  ▪ Mass flow
	  ▪ Flow velocity
	  ▪ Temperature
	  ▪ Calculated saturated steam pressure
	  ▪ Total mass flow
	  ▪ Energy flow
	  ▪ Heat flow difference
	  ▪ Pressure
	  ▪ Reynolds number
	  ▪ Totalizer 1-3
	▪ Status
	▪ Status of low flow cut off

chanhvinh.com

FOUNDATION Fieldbus

FOUNDATION Fieldbus	H1, IEC 61158-2, galvanically isolated
Data transfer	31.25 kbit/s
Current consumption	15 mA
Permitted supply voltage	9 to 32 V
Bus connection	With integrated reverse polarity protection

PROFIBUS PA

PROFIBUS PA	In accordance with EN 50170 Volume 2, IEC 61158-2 (MBP), galvanically isolated
Data transmission	31.25 kbit/s
Current consumption	16 mA
Permitted supply voltage	9 to 32 V
Bus connection	With integrated reverse polarity protection

Signal on alarm

Depending on the interface, failure information is displayed as follows:

Current output 4 to 20 mA

4 to 20 mA

Failure mode	Choose from: ▪ 4 to 20 mA in accordance with NAMUR recommendation NE 43 ▪ 4 to 20 mA in accordance with US ▪ Min. value: 3.59 mA ▪ Max. value: 22.5 mA ▪ Freely definable value between: 3.59 to 22.5 mA ▪ Actual value ▪ Last valid value

Pulse/frequency/switch output

Pulse output	
Failure mode	No pulses
Frequency output	
Failure mode	Choose from: ▪ Actual value ▪ 0 Hz ▪ Defined value: 0 to 1250 Hz
Switch output	
Failure mode	Choose from: ▪ Current status ▪ Open ▪ Closed

FOUNDATION Fieldbus

Status and alarm messages	Diagnostics in accordance with FF-891
Failure current FDE (Fault Disconnection Electronic)	0 mA

chanhvinh.com

PROFIBUS PA

Status and alarm messages	Diagnostics in accordance with PROFIBUS PA Profile 3.02
Failure current FDE (Fault Disconnection Electronic)	0 mA

Local display

Plain text display	With information on cause and remedial measures
Backlight	Additionally for device version with SD03 local display: red lighting indicates a device error.

Status signal as per NAMUR recommendation NE 107

Interface/protocol

- Via digital communication:
  - HART protocol
  - FOUNDATION Fieldbus
  - PROFIBUS PA
- Via service interface
  CDI service interface

Plain text display	With information on cause and remedial measures

Additional information on remote operation → 65

Load

Load for current output: 0 to 500 Ω, depending on the external supply voltage of the power supply unit

Calculation of the maximum load

Depending on the supply voltage of the power supply unit (U_S), the maximum load (R_B) including line resistance must be observed to ensure adequate terminal voltage at the device. In doing so, observe the minimum terminal voltage

- For U_S = 17.9 to 18.9 V: $R_B \leq (U_S - 17.9\ V)$: 0.0036 A
- For U_S = 18.9 to 24 V: $R_B \leq (U_S - 13\ V)$: 0.022 A
- For U_S = ≥ 24 V: $R_B \leq 500\ \Omega$

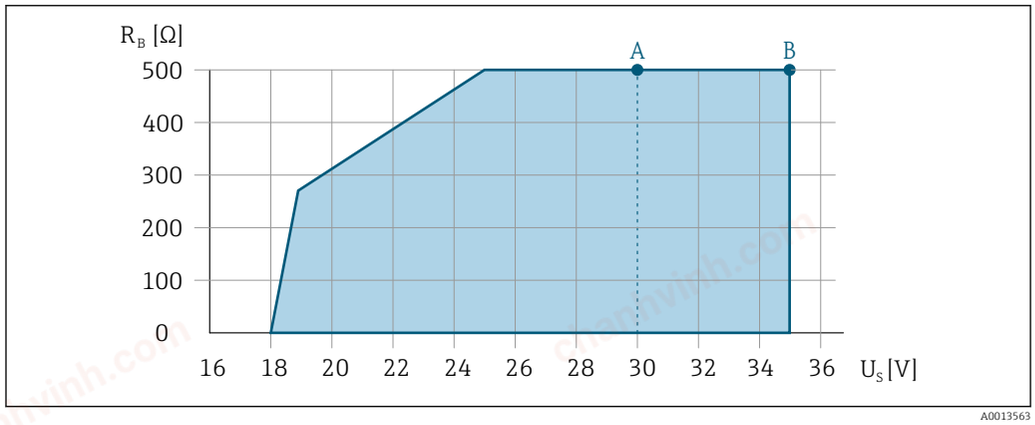

A0013563

A Operating range for order code for "Output", option A "4-20 mA HART"/option B "4-20 mA HART, pulse/frequency/switch output" with Ex i and option C "4-20 mA HART + 4-20 mA analog"

B Operating range for order code for "Output", option A "4-20 mA HART"/option B "4-20 mA HART, pulse/frequency/switch output" with non-Ex and Ex d

chanhvinh.com

Sample calculation
Supply voltage of power supply unit: U_S =19 V
Maximum load: $R_B \leq$ (19 V - 13 V): 0.022 A = 273 Ω

Ex connection data

Safety-related values

Type of protection Ex d

Order code for "Output"	Output type	Safety-related values
Option **A**	4-20mA HART	U_{nom} = DC 35 V U_{max} = 250 V
Option **B**	4-20mA HART	U_{nom} = DC 35 V U_{max} = 250 V
	Pulse/frequency/switch output	U_{nom} = DC 35 V U_{max} = 250 V P_{max} = 1 W [1]
Option **C**	4-20mA HART	U_{nom} = DC 30 V U_{max} = 250 V
	4-20mA analog	
Option **D**	4-20mA HART	U_{nom} = DC 35 V U_{max} = 250 V
	Pulse/frequency/switch output	U_{nom} = DC 35 V U_{max} = 250 V P_{max} = 1 W [1]
	4 to 20 mA current input	U_{nom} = DC 35 V U_{max} = 250 V
Option **E**	FOUNDATION Fieldbus	U_{nom} = DC 32 V U_{max} = 250 V P_{max} = 0.88 W
	Pulse/frequency/switch output	U_{nom} = DC 35 V U_{max} = 250 V P_{max} = 1 W [1]
Option **G**	PROFIBUS PA	U_{nom} = DC 32 V U_{max} = 250 V P_{max} = 0.88 W
	Pulse/frequency/switch output	U_{nom} = DC 35 V U_{max} = 250 V P_{max} = 1 W [1]

1) Internal circuit limited by R_i = 760.5 Ω

Type of protection Ex ec Ex nA

Order code for "Output"	Output type	Safety-related values
Option **A**	4-20mA HART	U_{nom} = DC 35 V U_{max} = 250 V
Option **B**	4-20mA HART	U_{nom} = DC 35 V U_{max} = 250 V
	Pulse/frequency/switch output	U_{nom} = DC 35 V U_{max} = 250 V P_{max} = 1 W [1]
Option **C**	4-20mA HART	U_{nom} = DC 30 V U_{max} = 250 V
	4-20mA analog	
Option **D**	4-20mA HART	U_{nom} = DC 35 V U_{max} = 250 V

chanhvinh.com

Order code for "Output"	Output type	Safety-related values
	Pulse/frequency/switch output	U_{nom} = DC 35 V U_{max} = 250 V P_{max} = 1 W
	4 to 20 mA current input	U_{nom} = DC 35 V U_{max} = 250 V
Option **E**	FOUNDATION Fieldbus	U_{nom} = DC 32 V U_{max} = 250 V P_{max} = 0.88 W
	Pulse/frequency/switch output	U_{nom} = DC 35 V U_{max} = 250 V P_{max} = 1 W
Option **G**	PROFIBUS PA	U_{nom} = DC 32 V U_{max} = 250 V P_{max} = 0.88 W
	Pulse/frequency/switch output	U_{nom} = DC 35 V U_{max} = 250 V P_{max} = 1 W

1) Internal circuit limited by R_i = 760.5 Ω

Type of protection XP

Order code for "Output"	Output type	Safety-related values
Option **A**	4-20mA HART	U_{nom} = DC 35 V U_{max} = 250 V
Option **B**	4-20mA HART	U_{nom} = DC 35 V U_{max} = 250 V
	Pulse/frequency/switch output	U_{nom} = DC 35 V U_{max} = 250 V P_{max} = 1 W [1)]
Option **C**	4-20mA HART	U_{nom} = DC 30 V U_{max} = 250 V
	4-20mA analog	
Option **D**	4-20mA HART	U_{nom} = DC 35 V U_{max} = 250 V
	Pulse/frequency/switch output	U_{nom} = DC 35 V U_{max} = 250 V P_{max} = 1 W [1)]
	4 to 20 mA current input	U_{nom} = DC 35 V U_{max} = 250 V
Option **E**	FOUNDATION Fieldbus	U_{nom} = DC 32 V U_{max} = 250 V P_{max} = 0.88 W
	Pulse/frequency/switch output	U_{nom} = DC 35 V U_{max} = 250 V P_{max} = 1 W [1)]
Option **G**	PROFIBUS PA	U_{nom} = DC 32 V U_{max} = 250 V P_{max} = 0.88 W
	Pulse/frequency/switch output	U_{nom} = DC 35 V U_{max} = 250 V P_{max} = 1 W [1)]

1) Internal circuit limited by R_i = 760.5 Ω

chanhvinh.com

Intrinsically safe values

Type of protection Ex ia

Order code for "Output"	Output type	Intrinsically safe values	
Option **A**	4-20mA HART	U_i = DC 30 V I_i = 300 mA P_i = 1 W L_i = 0 µH C_i = 5 nF	
Option **B**	4-20mA HART	U_i = DC 30 V I_i = 300 mA P_i = 1 W L_i = 0 µH C_i = 5 nF	
	Pulse/frequency/switch output	U_i = DC 30 V I_i = 300 mA P_i = 1 W L_i = 0 µH C_i = 6 nF	
Option **C**	4-20mA HART	U_i = DC 30 V I_i = 300 mA P_i = 1 W L_i = 0 µH C_i = 30 nF	
	4-20mA analog		
Option **D**	4-20mA HART	U_i = DC 30 V I_i = 300 mA P_i = 1 W L_i = 0 µH C_i = 5 nF	
	Pulse/frequency/switch output	U_i = DC 30 V I_i = 300 mA P_i = 1 W L_i = 0 µH C_i = 6 nF	
	4 to 20 mA current input	U_i = DC 30 V I_i = 300 mA P_i = 1 W L_i = 0 µH C_i = 5 nF	
Option **E**	FOUNDATION Fieldbus	STANDARD U_i = 30 V I_i = 300 mA P_i = 1.2 W L_i = 10 µH C_i = 5 nF	FISCO U_i = 17.5 V I_i = 550 mA P_i = 5.5 W L_i = 10 µH C_i = 5 nF
	Pulse/frequency/switch output	U_i = 30 V I_i = 300 mA P_i = 1 W L_i = 0 µH C_i = 6 nF	
Option **G**	PROFIBUS PA	STANDARD U_i = 30 V I_i = 300 mA P_i = 1.2 W L_i = 10 µH C_i = 5 nF	FISCO U_i = 17.5 V I_i = 550 mA P_i = 5.5 W L_i = 10 µH C_i = 5 nF
	Pulse/frequency/switch output	U_i = 30 V I_i = 300 mA P_i = 1 W L_i = 0 µH C_i = 6 nF	

chanhvinh.com

Type of protection Ex ic

Order code for "Output"	Output type	Intrinsically safe values	
Option **A**	4-20mA HART	U_i = DC 35 V I_i = n.a. P_i = 1 W L_i = 0 µH C_i = 5 nF	
Option **B**	4-20mA HART	U_i = DC 35 V I_i = n.a. P_i = 1 W L_i = 0 µH C_i = 5 nF	
	Pulse/frequency/switch output	U_i = DC 35 V I_i = n.a. P_i = 1 W L_i = 0 µH C_i = 6 nF	
Option **C**	4-20mA HART	U_i = DC 30 V I_i = n.a. P_i = 1 W L_i = 0 µH C_i = 30 nF	
	4-20mA analog		
Option **D**	4-20mA HART	U_i = DC 35 V I_i = n.a. P_i = 1 W L_i = 0 µH C_i = 5 nF	
	Pulse/frequency/switch output	U_i = DC 35 V I_i = n.a. P_i = 1 W L_i = 0 µH C_i = 6 nF	
	4 to 20 mA current input	U_i = DC 35 V I_i = n.a. P_i = 1 W L_i = 0 µH C_i = 5 nF	
Option **E**	FOUNDATION Fieldbus	STANDARD U_i = 32 V I_i = 300 mA P_i = n.a. L_i = 10 µH C_i = 5 nF	FISCO U_i = 17.5 V I_i = n.a. P_i = n.a. L_i = 10 µH C_i = 5 nF
	Pulse/frequency/switch output	U_i = 35 V I_i = 300 mA P_i = 1 W L_i = 0 µH C_i = 6 nF	
Option **G**	PROFIBUS PA	STANDARD U_i = 32 V I_i = 300 mA P_i = n.a. L_i = 10 µH C_i = 5 nF	FISCO U_i = 17.5 V I_i = n.a. P_i = n.a. L_i = 10 µH C_i = 5 nF
	Pulse/frequency/switch output	U_i = 35 V I_i = 300 mA P_i = 1 W L_i = 0 µH C_i = 6 nF	

chanhvinh.com

Type of protection IS

Order code for "Output"	Output type	Intrinsically safe values	
Option **A**	4-20mA HART	U_i = DC 30 V I_i = 300 mA P_i = 1 W L_i = 0 µH C_i = 5 nF	
Option **B**	4-20mA HART	U_i = DC 30 V I_i = 300 mA P_i = 1 W L_i = 0 µH C_i = 5 nF	
	Pulse/frequency/switch output	U_i = DC 30 V I_i = 300 mA P_i = 1 W L_i = 0 µH C_i = 6 nF	
Option **C**	4-20mA HART	U_i = DC 30 V I_i = 300 mA P_i = 1 W L_i = 0 µH C_i = 30 nF	
	4-20mA analog		
Option **D**	4-20mA HART	U_i = DC 30 V I_i = 300 mA P_i = 1 W L_i = 0 µH C_i = 5 nF	
	Pulse/frequency/switch output	U_i = DC 30 V I_i = 300 mA P_i = 1 W L_i = 0 µH C_i = 6 nF	
	4 to 20 mA current input	U_i = DC 30 V I_i = 300 mA P_i = 1 W L_i = 0 µH C_i = 5 nF	
Option **E**	FOUNDATION Fieldbus	STANDARD U_i = 30 V l_i = 300 mA P_i = 1.2 W L_i = 10 µH C_i = 5 nF	FISCO U_i = 17.5 V l_i = 550 mA P_i = 5.5 W L_i = 10 µH C_i = 5 nF
	Pulse/frequency/switch output	U_i = 30 V l_i = 300 mA P_i = 1 W L_i = 0 µH C_i = 6 nF	
Option **G**	PROFIBUS PA	STANDARD U_i = 30 V l_i = 300 mA P_i = 1.2 W L_i = 10 µH C_i = 5 nF	FISCO U_i = 17.5 V l_i = 550 mA P_i = 5.5 W L_i = 10 µH C_i = 5 nF
	Pulse/frequency/switch output	U_i = 30 V l_i = 300 mA P_i = 1 W L_i = 0 µH C_i = 6 nF	

Low flow cut off

The switch points for low flow cut off are preset and can be configured.

chanhvinh.com

Galvanic isolation

All inputs and outputs are galvanically isolated from one another.

Protocol-specific data

HART

Manufacturer ID	0x11
Device type ID	0x0038
HART protocol revision	7
Device description files (DTM, DD)	Information and files under: www.endress.com
HART load	▪ Min. 250 Ω ▪ Max. 500 Ω
System integration	For information on system integration, see Operating Instructions.→ 76 ▪ Measured variables via HART protocol ▪ Burst Mode functionality

FOUNDATION Fieldbus

Manufacturer ID	0x452B48
Ident number	0x1038
Device revision	2
DD revision	Information and files under: ▪ www.endress.com ▪ www.fieldbus.org
CFF revision	
Device Tester Version (ITK version)	6.2.0
ITK Test Campaign Number	Information: ▪ www.endress.com ▪ www.fieldbus.org
Link Master capability (LAS)	Yes
Choice of "Link Master" and "Basic Device"	Yes Factory setting: Basic Device
Node address	Factory setting: 247 (0xF7)
Supported functions	The following methods are supported: ▪ Restart ▪ ENP Restart ▪ Diagnostic ▪ Read events ▪ Read trend data
Virtual Communication Relationships (VCRs)	
Number of VCRs	44
Number of link objects in VFD	50
Permanent entries	1
Client VCRs	0
Server VCRs	10
Source VCRs	43
Sink VCRs	0
Subscriber VCRs	43
Publisher VCRs	43
Device Link Capabilities	
Slot time	4

chanhvinh.com

Min. delay between PDU	8
Max. response delay	Min. 5
System integration	For information on system integration, see Operating Instructions.→ 76 ▪ Cyclic data transmission ▪ Description of the modules ▪ Execution times ▪ Methods

PROFIBUS PA

Manufacturer ID	0x11
Ident number	0x1564
Profile version	3.02
Device description files (GSD, DTM, DD)	Information and files under: ▪ www.endress.com ▪ www.profibus.org
Supported functions	▪ Identification & Maintenance Simple device identification via control system and nameplate ▪ PROFIBUS upload/download Reading and writing parameters is up to ten times faster with PROFIBUS upload/download ▪ Condensed status Simplest and self-explanatory diagnostic information by categorizing diagnostic messages that occur
Configuration of the device address	▪ DIP switches on the I/O electronics module ▪ Local display ▪ Via operating tools (e. g. FieldCare)
System integration	For information on system integration, see Operating Instructions.→ 76 ▪ Cyclic data transmission ▪ Block model ▪ Description of the modules

Power supply

Terminal assignment

Transmitter

Connection versions

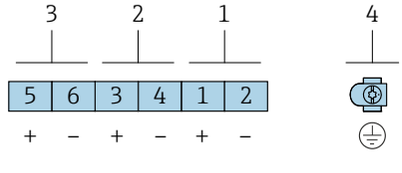

Maximum number of terminals *Terminals 1 to 6:* *Without integrated overvoltage protection*	*Maximum number of terminals for order code for "Accessory mounted", option NA "Overvoltage protection"* ▪ *Terminals 1 to 4:* *With integrated overvoltage protection* ▪ *Terminals 5 to 6:* *Without integrated overvoltage protection*

1	*Output 1 (passive): supply voltage and signal transmission*
2	*Output 2 (passive): supply voltage and signal transmission*
3	*Input (passive): supply voltage and signal transmission*
4	*Ground terminal for cable shield*

chanhvinh.com

Order code for "Output"	Terminal numbers					
	Output 1		Output 2		Input	
	1 (+)	2 (-)	3 (+)	4 (-)	5 (+)	6 (-)
Option **A**	4-20 mA HART (passive)		-		-	
Option **B** [1]	4-20 mA HART (passive)		Pulse/frequency/switch output (passive)		-	
Option **C** [1]	4-20 mA HART (passive)		4-20 mA analog (passive)		-	
Option **D** [1] [2]	4-20 mA HART (passive)		Pulse/frequency/switch output (passive)		4-20 mA current input (passive)	
Option **E** [1] [3]	FOUNDATION Fieldbus		Pulse/frequency/switch output (passive)		-	
Option **G** [1] [4]	PROFIBUS PA		Pulse/frequency/switch output (passive)		-	

1) Output 1 must always be used; output 2 is optional.
2) The integrated overvoltage protection is not used with option D: Terminals 5 and 6 (current input) are not protected against overvoltage.
3) FOUNDATION Fieldbus with integrated reverse polarity protection.
4) PROFIBUS PA with integrated reverse polarity protection.

Connecting cable for remote version

Transmitter and sensor connection housing

In the case of the remote version, the sensor and transmitter are mounted separately from on another and connected by a connecting cable. Connection is performed via the sensor connection housing and the transmitter housing.

How the connecting cable is connected in the transmitter housing depends on the measuring device approval and the version of the connecting cable used.

In the following versions, only terminals can be used for connection in the transmitter housing:
- Order code for "Electrical connection", option B, C, D
- Certain approvals: Ex nA, Ex ec, Ex tb and Division 1
- Use of reinforced connecting cable

In the following versions, an M12 device connector is used for connection in the transmitter housing:
- All other approvals
- Use of connecting cable (standard)

Terminals are always used to connect the connecting cable in the sensor connection housing (tightening torques for screws for cable strain relief: 1.2 to 1.7 Nm).

Connection via terminals

chanhvinh.com

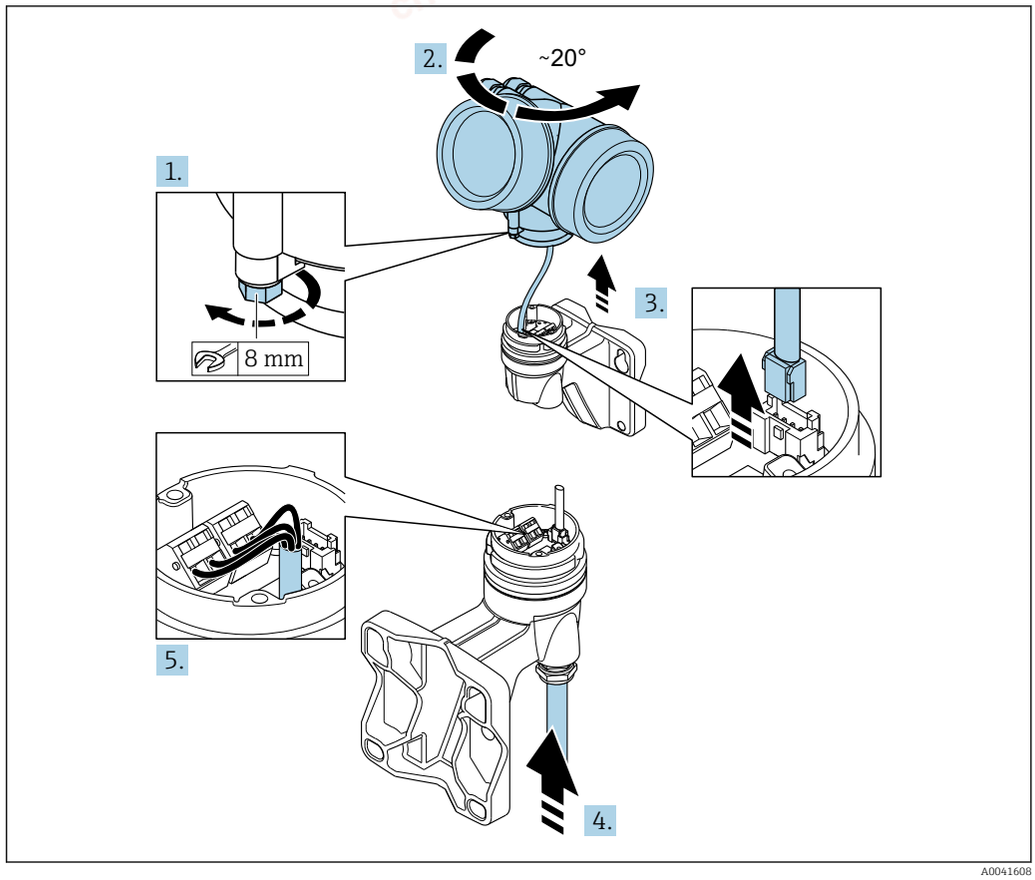

A0041608

1. Loosen the securing clamp of the transmitter housing.
2. Turn the transmitter housing clockwise by approx. 20°.
3. NOTICE

   The connection board of the wall housing is connected to the electronics board of the transmitter via a signal cable!

   ▶ Pay attention to the signal cable when lifting the transmitter housing!

   Lift the transmitter housing, plug the signal cable out of the connection board of the wall holder and remove the transmitter housing.
4. Release the cable gland and insert the connecting cable (use the shorter stripped end of the connecting cable).
5. Wire the connecting cable → 2, 26.
6. Reverse the removal procedure to reassemble the transmitter housing.
7. Firmly tighten the cable gland.

Connecting cable (standard, reinforced)

chanhvinh.com

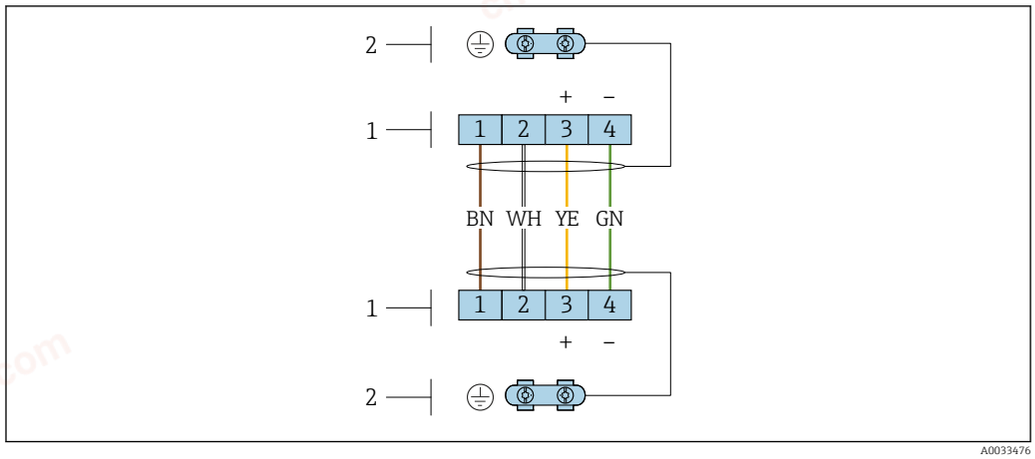

2 *Terminals for connection compartment in the transmitter wall holder and the sensor connection housing*

1 Terminals for connecting cable
2 Grounding via the cable strain relief

Terminal number	Assignment	Cable color Connecting cable
1	Supply voltage	Brown
2	Grounding	White
3	RS485 (+)	Yellow
4	RS485 (–)	Green

Pin assignment, device plug

PROFIBUS PA

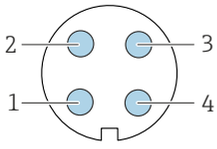

Pin		Assignment	Coding	Plug/socket
1	+	PROFIBUS PA +	A	Plug
2		Grounding		
3	-	PROFIBUS PA –		
4		Not assigned		

FOUNDATION Fieldbus

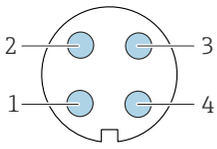

Pin		Assignment	Coding	Plug/socket
1	+	Signal +	A	Plug
2	-	Signal –		
3		Grounding		
4		Not assigned		

Supply voltage

Transmitter

An external power supply is required for each output.

Supply voltage for a compact version without a local display [1)]

Order code for "Output; input"	Minimum terminal voltage [2)]	Maximum terminal voltage
Option **A**: 4-20 mA HART	≥ DC 12 V	DC 35 V
Option **B**: 4-20 mA HART, pulse/ frequency/switch output	≥ DC 12 V	DC 35 V

chanhvinh.com

Order code for "Output; input"	Minimum terminal voltage [2]	Maximum terminal voltage
Option **C**: 4-20 mA HART + 4-20 mA analog	≥ DC 12 V	DC 30 V
Option **D**: 4-20 mA HART, pulse/ frequency/switch output, 4-20 mA current input [3]	≥ DC 12 V	DC 35 V
Option **E**: FOUNDATION Fieldbus, pulse/ frequency/switch output	≥ DC 9 V	DC 32 V
Option **G**: PROFIBUS PA, pulse/frequency/ switch output	≥ DC 9 V	DC 32 V

1) In event of external supply voltage of the power supply unit with load, the PROFIBUS DP/PA coupler or FOUNDATION Fieldbus power conditioners
2) The minimum terminal voltage increases if local operation is used: see the following table
3) Voltage drop 2.2 to 3 V for 3.59 to 22 mA

Increase in minimum terminal voltage

Order code for "Display; operation"	Increase in minimum terminal voltage
Option **C**: Local operation SD02	+ DC 1 V
Option **E**: Local operation SD03 with lighting (**backlighting** not used)	+ DC 1 V
Option **E**: Local operation SD03 with lighting (**backlighting** used)	+ DC 3 V

For information about the load see → 16

Various power supply units can be ordered from Endress+Hauser: → 76

For information on the Ex connection values → 17

Power consumption

Transmitter

Order code for "Output; input"	Maximum power consumption
Option A: 4-20 mA HART	770 mW
Option B: 4-20 mA HART, pulse/ frequency/switch output	▪ Operation with output 1: 770 mW ▪ Operation with output 1 and 2: 2 770 mW
Option C: 4-20 mA HART + 4-20 mA analog	▪ Operation with output 1: 660 mW ▪ Operation with output 1 and 2: 1 320 mW
Option D: 4-20 mA HART, pulse/ frequency/switch output, 4-20 mA current input	▪ Operation with output 1: 770 mW ▪ Operation with output 1 and 2: 2770 mW ▪ Operation with output 1 and input: 840 mW ▪ Operation with output 1, 2 and input: 2840 mW
Option E: FOUNDATION Fieldbus, pulse/ frequency/switch output	▪ Operation with output 1: 512 mW ▪ Operation with output 1 and 2: 2 512 mW
Option G: PROFIBUS PA, pulse/frequency/ switch output	▪ Operation with output 1: 512 mW ▪ Operation with output 1 and 2: 2 512 mW

For information on the Ex connection values → 17

chanhvinh.com

Current consumption

Current output

For every 4-20 mA or 4-20 mA HART current output: 3.6 to 22.5 mA

If the option **Defined value** is selected in the **Failure mode** parameter : 3.59 to 22.5 mA

Current input

3.59 to 22.5 mA

Internal current limiting: max. 26 mA

FOUNDATION Fieldbus

15 mA

PROFIBUS PA

15 mA

Power supply failure

- Totalizers stop at the last value measured.
- Depending on the device version, the configuration is retained in the device memoryor in the pluggable data memory (HistoROM DAT).
- Error messages (incl. total operated hours) are stored.

Electrical connection

Connecting the transmitter

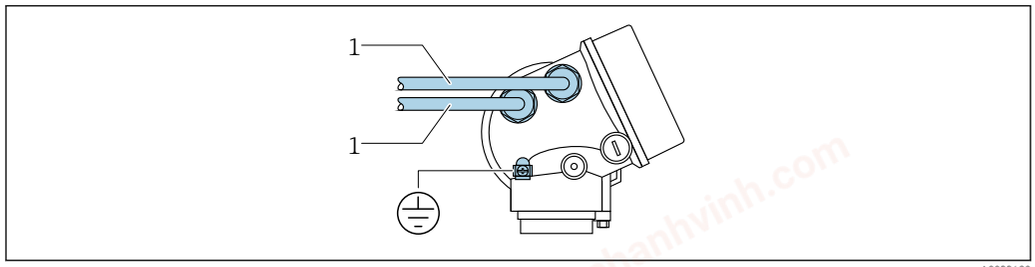

1 Cable entries for inputs/outputs

chanhvinh.com

Remote version connection

Connecting cable

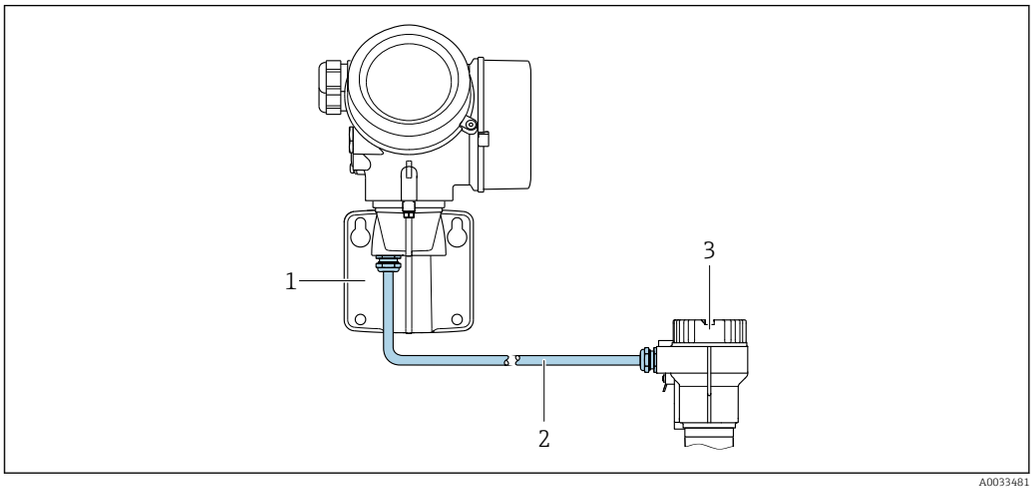

3 *Connecting cable connection*

1 *Wall holder with connection compartment (transmitter)*
2 *Connecting cable*
3 *Sensor connection housing*

How the connecting cable is connected in the transmitter housing depends on the measuring device approval and the version of the connecting cable used.

In the following versions, only terminals can be used for connection in the transmitter housing:
- Order code for "Electrical connection", option B, C, D
- Certain approvals: Ex nA, Ex ec, Ex tb and Division 1
- Use of reinforced connecting cable

In the following versions, an M12 device connector is used for connection in the transmitter housing:
- All other approvals
- Use of connecting cable (standard)

Terminals are always used to connect the connecting cable in the sensor connection housing (tightening torques for screws for cable strain relief: 1.2 to 1.7 Nm).

Connection examples

Current output 4-20 mA HART

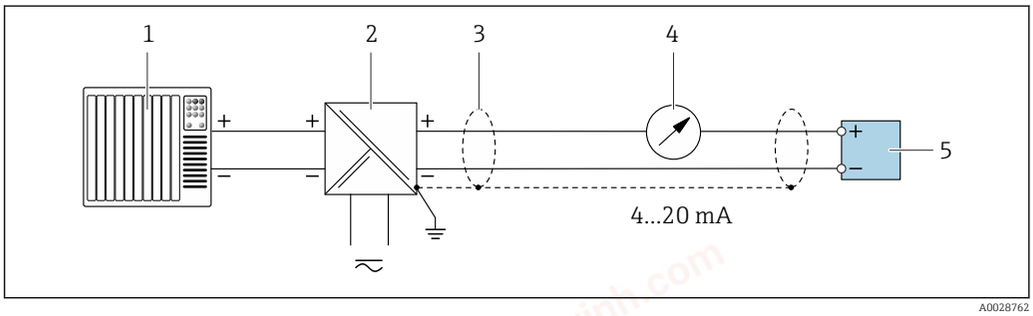

4 *Connection example for 4 to 20 mA HART current output (passive)*

1 *Automation system with current input (e.g. PLC)*
2 *Power supply*
3 *Cable shield provided at one end. The cable shield must be grounded at both ends to comply with EMC requirements; observe cable specifications*
4 *Analog display unit: observe maximum load*
5 *Transmitter*

chanhvinh.com

Pulse/frequency output

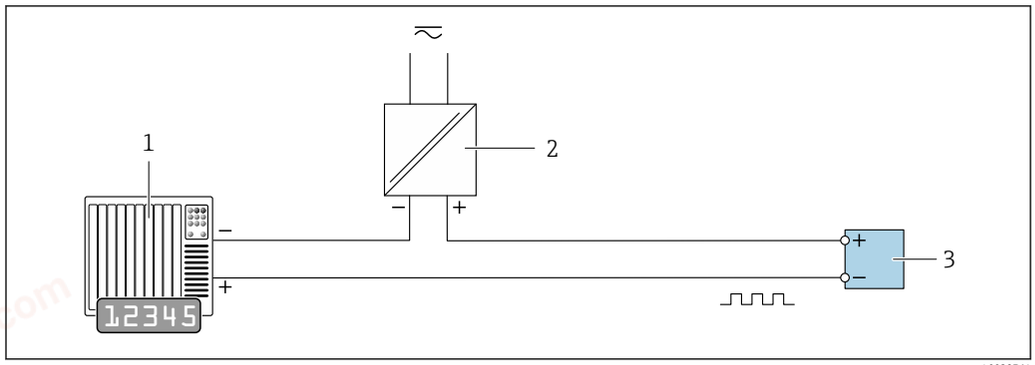

5 *Connection example for pulse/frequency output (passive)*

1 *Automation system with pulse/frequency input (e.g. PLC)*
2 *Power supply*
3 *Transmitter: Observe input values*

Switch output

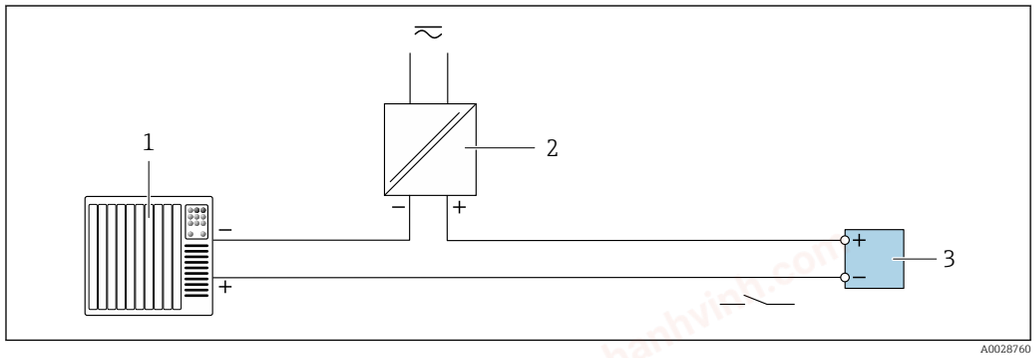

6 *Connection example for switch output (passive)*

1 *Automation system with switch input (e.g. PLC)*
2 *Power supply*
3 *Transmitter: Observe input values*

chanhvinh.com

FOUNDATION Fieldbus

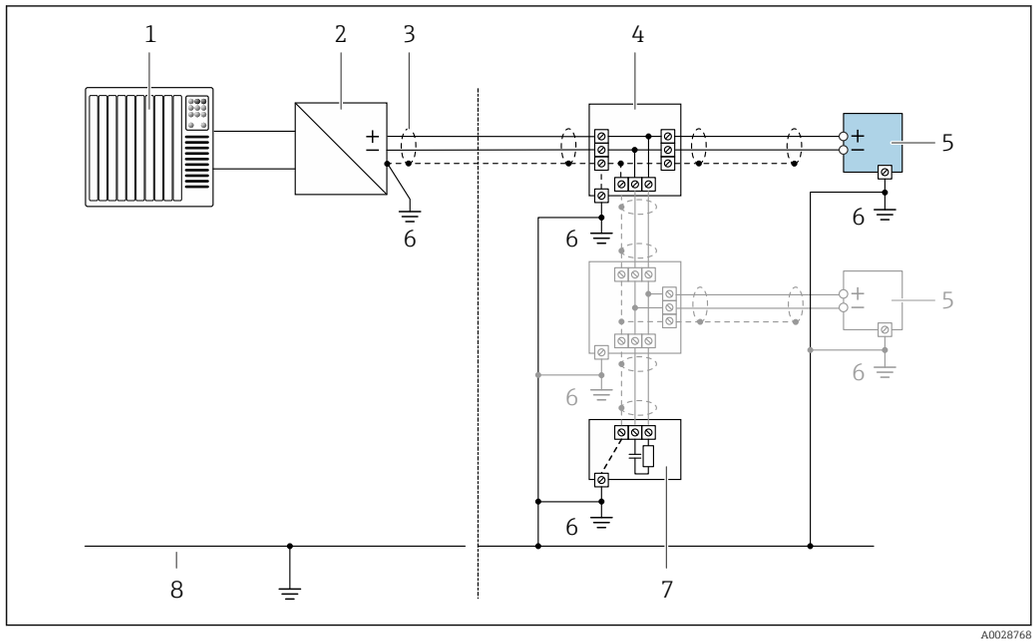

7 Connection example for FOUNDATION Fieldbus

1 Control system (e.g. PLC)
2 Power Conditioner (FOUNDATION Fieldbus)
3 Cable shield provided at one end. The cable shield must be grounded at both ends to comply with EMC requirements; observe cable specifications
4 T-box
5 Measuring device
6 Local grounding
7 Bus terminator
8 Potential matching line

chanhvinh.com

PROFIBUS PA

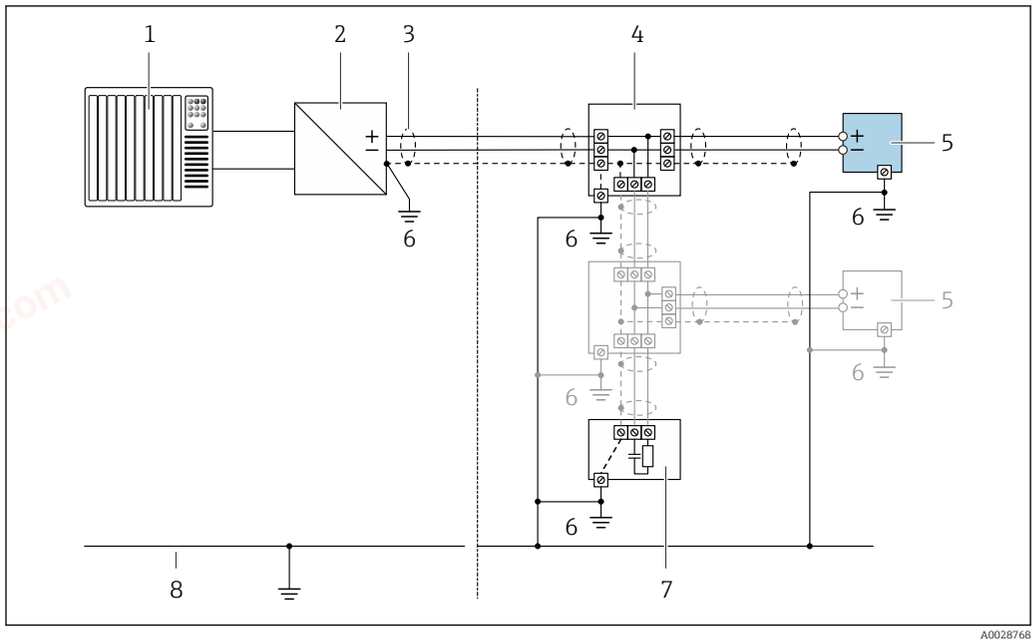

8 Connection example for PROFIBUS PA

1 *Control system (e.g. PLC)*
2 *PROFIBUS PA segment coupler*
3 *Cable shield provided at one end. The cable shield must be grounded at both ends to comply with EMC requirements; observe cable specifications*
4 *T-box*
5 *Measuring device*
6 *Local grounding*
7 *Bus terminator*
8 *Potential matching line*

Current input

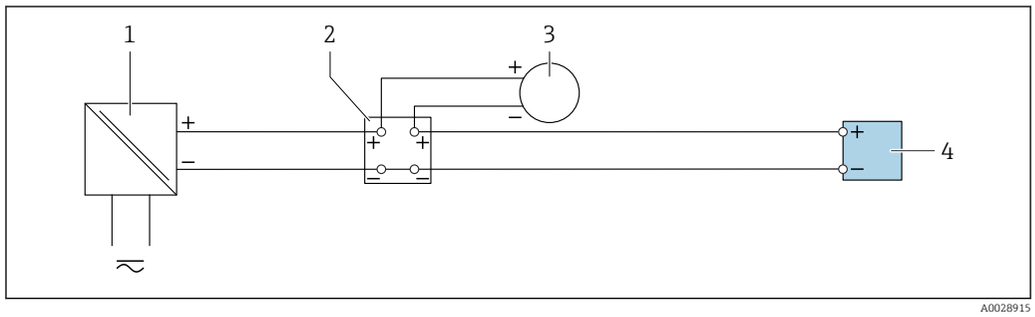

9 Connection example for 4-20 mA current input

1 *Active barrier for power supply (e.g. RN221N)*
2 *Terminal box*
3 *External measuring device (to read in pressure or temperature, for instance)*
4 *Transmitter*

chanhvinh.com

HART input

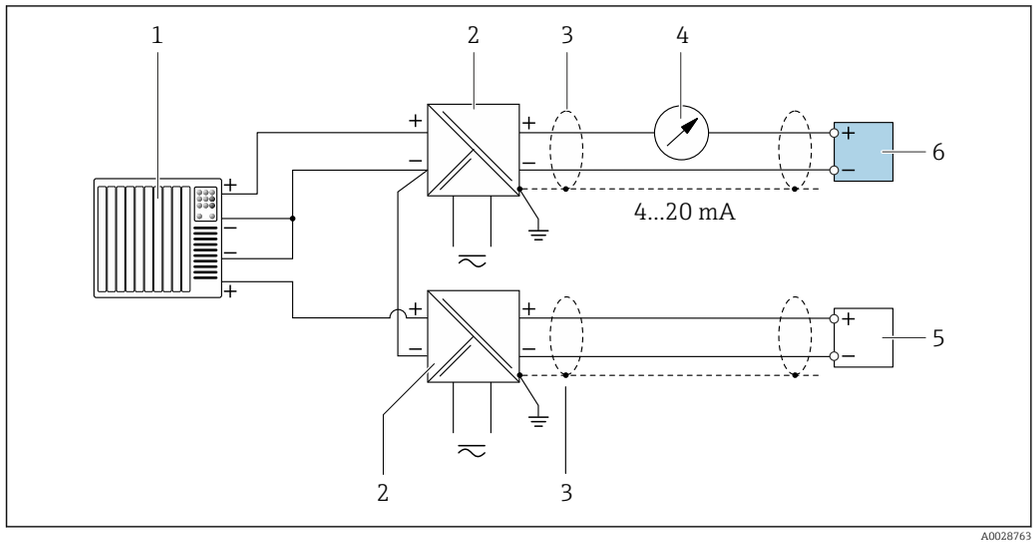

10 Connection example for HART input with a common negative (passive)

1 *Automation system with HART output (e.g. PLC)*
2 *Active barrier for power supply (e.g. RN221N)*
3 *Cable shield provided at one end. The cable shield must be grounded at both ends to comply with EMC requirements; observe cable specifications*
4 *Analog display unit: observe maximum load*
5 *Pressure measuring device (e.g. Cerabar M, Cerabar S): see requirements*
6 *Transmitter*

Potential equalization

Requirements

Please consider the following to ensure correct measurement:
- Same electrical potential for the fluid and sensor
- Remote version: same electrical potential for the sensor and transmitter
- Company-internal grounding concepts
- Pipe material and grounding

Terminals

- For device version without integrated overvoltage protection: plug-in spring terminals for wire cross-sections 0.5 to 2.5 mm² (20 to 14 AWG)
- For device version with integrated overvoltage protection: screw terminals for wire cross-sections 0.2 to 2.5 mm² (24 to 14 AWG)

Cable entries

- Cable gland (not for Ex d): M20 × 1.5 with cable Ø 6 to 12 mm (0.24 to 0.47 in)
- Thread for cable entry:
  - For non-hazardous and hazardous areas: NPT ½"
  - For non-hazardous and hazardous areas (not for XP): G ½"
  - For Ex d: M20 × 1.5

Cable specification

Permitted temperature range

- The installation guidelines that apply in the country of installation must be observed.
- The cables must be suitable for the minimum and maximum temperatures to be expected.

Signal cable

Current output 4 to 20 mA HART

A shielded cable is recommended. Observe grounding concept of the plant.

Current output 4 to 20 mA

Standard installation cable is sufficient.

Pulse/frequency/switch output

Standard installation cable is sufficient.

chanhvinh.com

Current input

Standard installation cable is sufficient.

FOUNDATION Fieldbus

Twisted, shielded two-wire cable.

For further information on planning and installing FOUNDATION Fieldbus networks see:

- Operating Instructions for "FOUNDATION Fieldbus Overview" (BA00013S)
- FOUNDATION Fieldbus Guideline
- IEC 61158-2 (MBP)

PROFIBUS PA

Twisted, shielded two-wire cable. Cable type A is recommended .

For further information on planning and installing PROFIBUS networks see:

- Operating Instructions "PROFIBUS DP/PA: Guidelines for planning and commissioning" (BA00034S)
- PNO Directive 2.092 "PROFIBUS PA User and Installation Guideline"
- IEC 61158-2 (MBP)

Connecting cable for remote version

Connecting cable (standard)

Standard cable	2 × 2 × 0.5 mm² (22 AWG) PVC cable with common shield (2 pairs, pair-stranded) [1]
Flame resistance	According to DIN EN 60332-1-2
Oil-resistance	According to DIN EN 60811-2-1
Shielding	Galvanized copper-braid, opt. density approx.85 %
Cable length	5 m (16 ft), 10 m (32 ft), 20 m (65 ft), 30 m (98 ft)
Operating temperature	When mounted in a fixed position: −50 to +105 °C (−58 to +221 °F); when cable can move freely: −25 to +105 °C (−13 to +221 °F)

1) UV radiation may cause damage to the outer jacket of the cable. Protect the cable from exposure to sun as much as possible.

Connecting cable (armored)

Cable, armored	2 × 2 × 0.34 mm² (22 AWG) PVC cable with common shield (2 pairs, pair-stranded) and additional steel-wire braided sheath [1]
Flame resistance	According to DIN EN 60332-1-2
Oil-resistance	According to DIN EN 60811-2-1
Shielding	Galvanized copper-braid, opt. density approx. 85%
Strain relief and reinforcement	Steel-wire braid, galvanized
Cable length	5 m (16 ft), 10 m (32 ft), 20 m (65 ft), 30 m (98 ft)
Operating temperature	When mounted in a fixed position: −50 to +105 °C (−58 to +221 °F); when cable can move freely: −25 to +105 °C (−13 to +221 °F)

1) UV radiation may cause damage to the outer jacket of the cable. Protect the cable from exposure to sun as much as possible.

Overvoltage protection

The device can be ordered with integrated overvoltage protection for diverse approvals:
Order code for "Accessory mounted", option NA "Overvoltage protection"

chanhvinh.com

Input voltage range	Values correspond to supply voltage specifications → 26 [1)]
Resistance per channel	2 · 0.5 Ω max.
DC sparkover voltage	400 to 700 V
Trip surge voltage	< 800 V
Capacitance at 1 MHz	< 1.5 pF
Nominal discharge current (8/20 µs)	10 kA
Temperature range	–40 to +85 °C (–40 to +185 °F)

1) The voltage is reduced by the amount of the internal resistance $I_{min} \cdot R_i$

Depending on the temperature class, restrictions apply to the ambient temperature for device versions with overvoltage protection .

For detailed information on the temperature tables, see the "Safety Instructions" (XA) for the device.

Performance characteristics

Reference operating conditions

- Error limits following ISO/DIN 11631
- +20 to +30 °C (+68 to +86 °F)
- 2 to 4 bar (29 to 58 psi)
- Calibration system traceable to national standards
- Calibration with the process connection corresponding to the particular standard

To obtain measured errors, use the *Applicator* sizing tool → 75

Maximum measured error

Base accuracy

o.r. = of reading

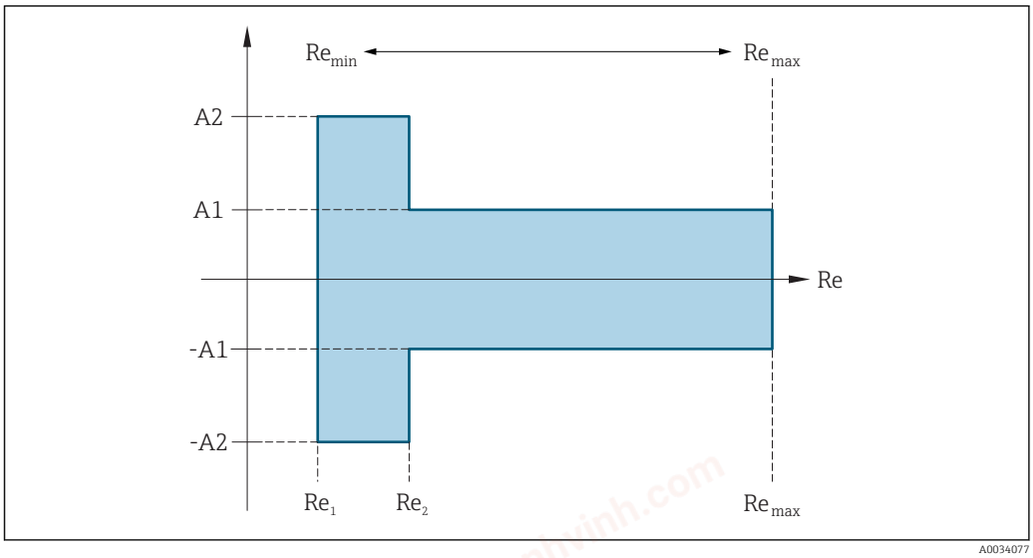

A0034077

Reynolds numbers	Incompressible	Compressible
	Standard	Standard
Re_1	5 000	
Re_2	20 000	

chanhvinh.com

Volume flow

Medium type		Incompressible	Compressible [1]
Reynolds number range	**Measured value deviation**	**Standard**	**Standard**
Re_1 to Re_2	A2	< 10 %	< 10 %
Re_2 to Re_{max}	A1	< 0.75 %	< 1.0 %

1) Accuracy specifications valid up to 75 m/s (246 ft/s)

Temperature

- Saturated steam and liquids at room temperature, if T > 100 °C (212 °F) applies:
  < 1 °C (1.8 °F)
- Gas:
  < 1 % o.r. [K]
- Volume flow if > 70 m/s (230 ft/s):
  2 % o.r.

Rise time 50 % (stirred under water, following IEC 60751): 8 s

Mass flow saturated steam

Flow velocity [m/s (ft/s)]	Temperature [°C (°F)]	Reynolds number range	Maximum measured error	Standard
20 to 50 (66 to 164)	150 (302) or (423 K)	Re_2 to Re_{max}	A1	< 1.7 %
		Re_1 to Re_2	A2	< 10 %
10 to 70 (33 to 210)	> 140 (284) or (413 K)	Re_2 to Re_{max}	A1	< 2 %
		Re_1 to Re_2	A2	< 10 %
< 10 (33)	–	Re > Re_1	A2, A1	5%

Mass flow of superheated steam/gases [1]

Process pressure [bar abs. (psi abs.)]	Reynolds number range	Measured value deviation	Standard [1]
< 40 (580)	Re_2 to Re_{max}	A1	1.7 %
	Re_1 to Re_2	A2	10 %
< 120 (1740)	Re_2 to Re_{max}	A1	2.6 %
	Re_1 to Re_2	A2	10 %

1) The use of a Cerabar S is required for the measured errors listed in the following section. The measured error used to calculate the error in the measured pressure is 0.15 %.

Water mass flow

Reynolds number range	Measured value deviation	Standard
Re = Re_2	A1	< 0.85 %
Re_1 to Re_2	A2	< 10 %

1) single gas, gas mixture, air: NEL40; natural gas: ISO 12213-2 contains AGA8-DC92, AGA NX-19, ISO 12213-3 contains SGERG-88 and AGA8 Gross Method 1

chanhvinh.com

Mass flow (user-specific liquids)

To specify the system accuracy, Endress+Hauser requires information about the type of liquid and its operating temperature or information in table form about the dependency between the liquid density and the temperature.

Example
- Acetone is to be measured at fluid temperatures from +70 to +90 °C (+158 to +194 °F).
- For this purpose, the **Reference temperature** parameter (7703) (here 80 °C (176 °F)), **Reference density** parameter (7700) (here 720.00 kg/m^3) and **Linear expansion coefficient** parameter (7621) (here 18.0298 × 10^{-4} 1/°C) must be entered in the transmitter.
- The overall system uncertainty, which is less than 0.9 % for the example above, is comprised of the following measurement uncertainties: uncertainty of volume flow measurement, uncertainty of temperature measurement, uncertainty of the density-temperature correlation used (including the resulting uncertainty of density).

Mass flow (other media)

Depends on the selected fluid and the pressure value, which is specified in the parameters. Individual error analysis must be performed.

Diameter mismatch correction

The measuring device is calibrated according to the ordered process connection. This calibration takes account of the edge at the transition from the mating pipe to the process connection. If the mating pipe used deviates from the ordered process connection, a diameter mismatch correction can compensate for the effects. The difference between the internal diameter of the ordered process connection and the internal diameter of the mating pipe used must be taken into consideration.

The measuring device can correct shifts in the calibration factor which are caused, for example, by a diameter mismatch between the device flange (e.g. ASME B16.5/Sch. 80, DN 50 (2")) and the mating pipe (e.g. ASME B16.5/Sch. 40, DN 50 (2")). Only apply diameter mismatch correction within the following limit values (listed below) for which test measurements have also been performed.

Disc (wafer flange):
- DN 15 (½"): ±15 % of the internal diameter
- DN 25 (1"): ±12 % of the internal diameter
- DN 40 (1½"): ±9 % of the internal diameter
- DN ≥ 50 (2"): ±8 % of the internal diameter

If the standard internal diameter of the ordered process connection differs from the internal diameter of the mating pipe, an additional measuring uncertainty of approx. 2 % o.r. must be expected.

Example
Influence of the diameter mismatch without using the correction function:
- Mating pipe DN 100 (4"), Schedule 80
- Device flange DN 100 (4"), Schedule 40
- This installation position results in a diameter mismatch of 5 mm (0.2 in). If the correction function is not used, an additional measuring uncertainty of approx. 2 % o.r. must be expected.
- If the basic conditions are met and the feature is enabled, the additional measuring uncertainty is 1 % o.r.

For detailed information on the parameters for diameter mismatch correction, see the Operating Instructions → 76

Accuracy of outputs

The outputs have the following base accuracy specifications.

Current output

Accuracy	±10 µA

Pulse/frequency output

o.r. = of reading

Accuracy	Max. ±100 ppm o.r.

chanhvinh.com

Repeatability

o.r. = of reading

±0.2 % o.r.

Response time

If all the configurable functions for filter times (flow damping, display damping, current output time constant, frequency output time constant, status output time constant) are set to 0, in the event of vortex frequencies of 10 Hz and higher a response time of max(T_v,100 ms) can be expected.

In the event of measuring frequencies < 10 Hz, the response time is > 100 ms and can be up to 10 s. T_v is the average vortex period duration of the flowing fluid.

Influence of ambient temperature

Current output

o.r. = of reading

Additional error, in relation to the span of 16 mA:

Temperature coefficient at zero point (4 mA)	0.02 %/10 K
Temperature coefficient with span (20 mA)	0.05 %/10 K

Pulse/frequency output

o.r. = of reading

Temperature coefficient	Max. ±100 ppm o.r.

Installation

Mounting location

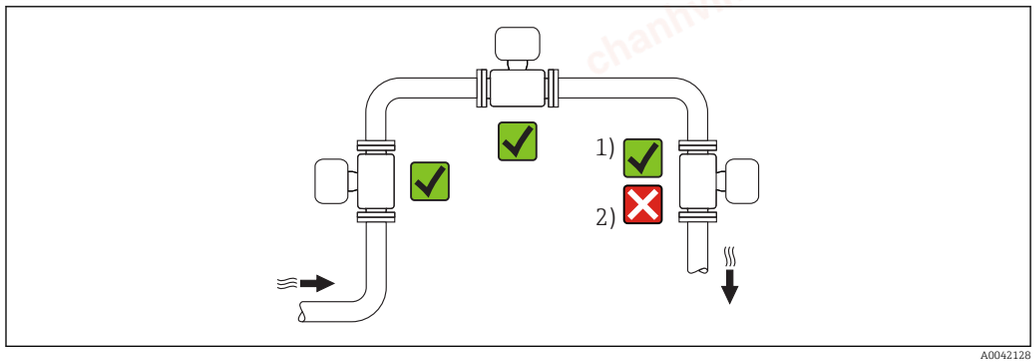

A0042128

1 Installation suitable for gases and steam
2 Installation not suitable for liquids

Orientation

The direction of the arrow on the sensor nameplate helps you to install the sensor according to the flow direction (direction of medium flow through the piping).

chanhvinh.com

Vortex meters require a fully developed flow profile as a prerequisite for correct volume flow measurement. Therefore, please note the following:

Orientation			Recommendation	
			Compact version	Remote version
A	Vertical orientation (liquids)	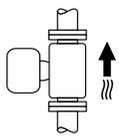 A0015591	✓✓ 1)	✓✓
A	Vertical orientation (dry gases)	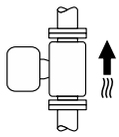 A0015591 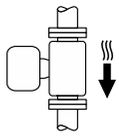 A0041785	✓✓	✓✓
B	Horizontal orientation, transmitter head up	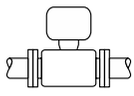 A0015589	✓✓ 2) 3)	✓✓
C	Horizontal orientation, transmitter head down	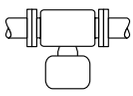 A0015590	✓✓ 4)	✓✓
D	Horizontal orientation, transmitter head at side	 A0015592	✓✓	✓✓

1) In the case of liquids, there should be upward flow in vertical pipes to avoid partial pipe filling (Fig. A). Disruption in flow measurement!
2) Danger of electronics overheating! If the fluid temperature is ≥ 200 °C (392 °F), orientation B is not permitted for the wafer version (Prowirl D) with nominal diameters of DN 100 (4") and DN 150 (6").
3) In the case of hot media (e.g. steam or fluid temperature (TM) ≥ 200 °C (392 °F): orientation C or D
4) In the case of very cold media (e.g. liquid nitrogen): orientation B or D

Inlet and outlet runs

To attain the specified level of accuracy of the measuring device, the inlet and outlet runs mentioned below must be maintained at the very minimum.

chanhvinh.com

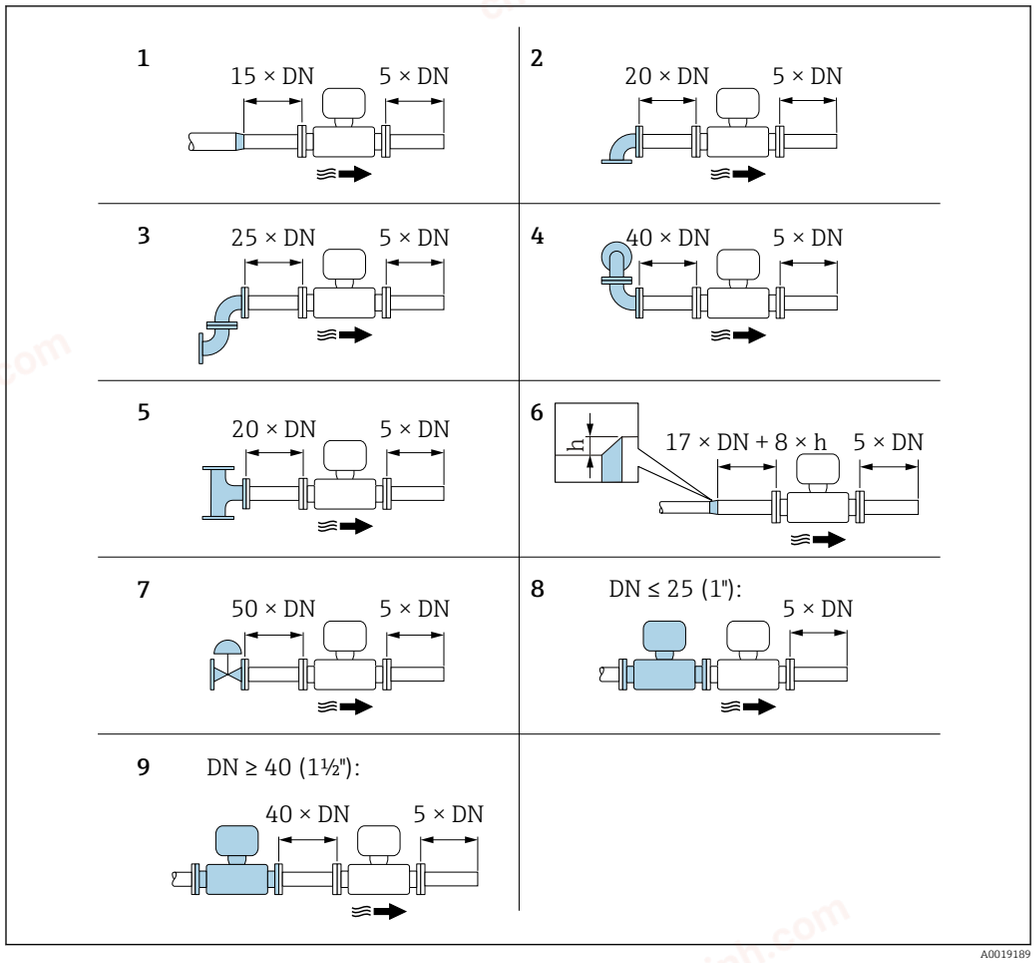

11 *Minimum inlet and outlet runs with various flow obstructions*

h Difference in expansion
1 Reduction by one nominal diameter size
2 Single elbow (90° elbow)
3 Double elbow (2 × 90° elbows, opposite)
4 Double elbow 3D (2 × 90° elbows, opposite, not on one plane)
5 T-piece
6 Expansion
7 Control valve
8 Two measuring devices in a row where DN ≤ 25 (1"): directly flange on flange
9 Two measuring devices in a row where DN ≥ 40 (1½"): for spacing, see graphic

- If there are several flow disturbances present, the longest specified inlet run must be maintained.
- If the required inlet runs cannot be observed, it is possible to install a specially designed flow conditioner → 40.

Flow conditioner

If the inlet runs cannot be observed, the use of a flow conditioner is recommended.

The flow conditioner is fitted between two pipe flanges and centered by the mounting bolts. Generally this reduces the inlet run needed to 10 × DN with full accuracy.

chanhvinh.com

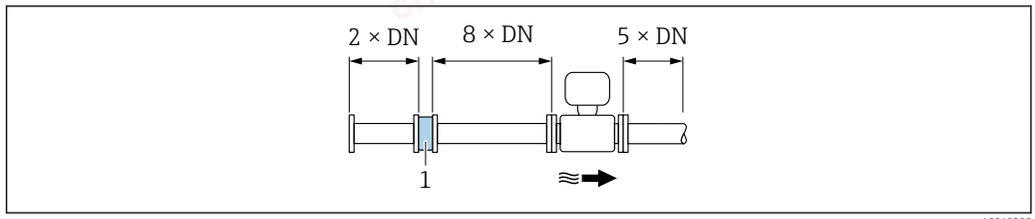

A0019208

1 Flow conditioner

The pressure loss for flow conditioners is calculated as follows: Δp [mbar] = 0.0085 · ρ [kg/m³] · v² [m/s]

Example for steam	Example for H_2O condensate (80 °C)
p = 10 bar abs.	ρ = 965 kg/m³
t = 240 °C → ρ = 4.39 kg/m³	v = 2.5 m/s
v = 40 m/s	$\Delta p = 0.0085 \cdot 965 \cdot 2.5^2$ = 51.3 mbar
$\Delta p = 0.0085 \cdot 4.394.39 \cdot 40^2$ = 59.7 mbar	

ρ : density of the process medium
v: average flow velocity
abs. = absolute

A specially designed flow conditioner is available from Endress+Hauser: → 51

Outlet runs when installing external devices

If installing an external device, observe the specified distance.

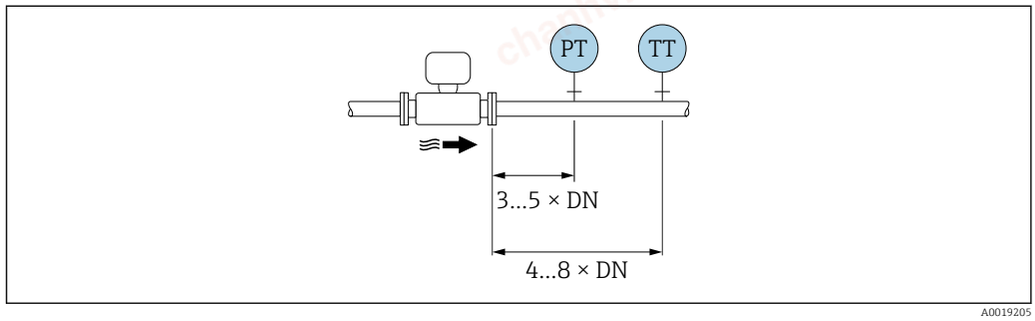

A0019205

PT Pressure
TT Temperature device

Mounting kit for disc (wafer version)

The centering rings supplied are used to mount and center the wafer-style devices.

A mounting kit comprises:
- Tie rods
- Seals
- Nuts
- Washers

chanhvinh.com

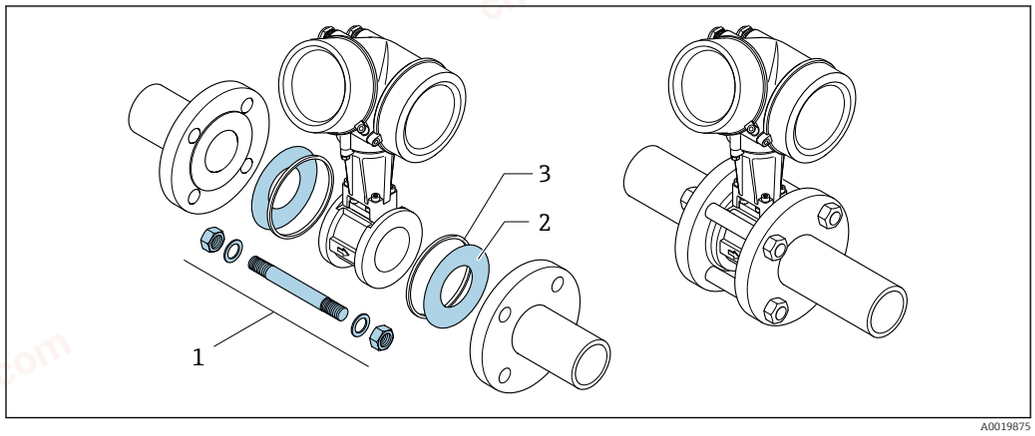

A0019875

12 *Mounting kit for wafer version*

1 *Nut, washer, tie rod*
2 *Seal*
3 *Centering ring (is supplied with the measuring device)*

Length of connecting cable

To ensure correct measuring results when using the remote version,
- observe the maximum permitted cable length: L_{max} = 30 m (90 ft).
- The value for the cable length must be calculated if the cable cross-section differs from the specification.

For detailed information about calculating the length of the connecting cable, refer to the Operating Instructions for the device on the CD-ROM provided

Mounting the transmitter housing

Wall mounting

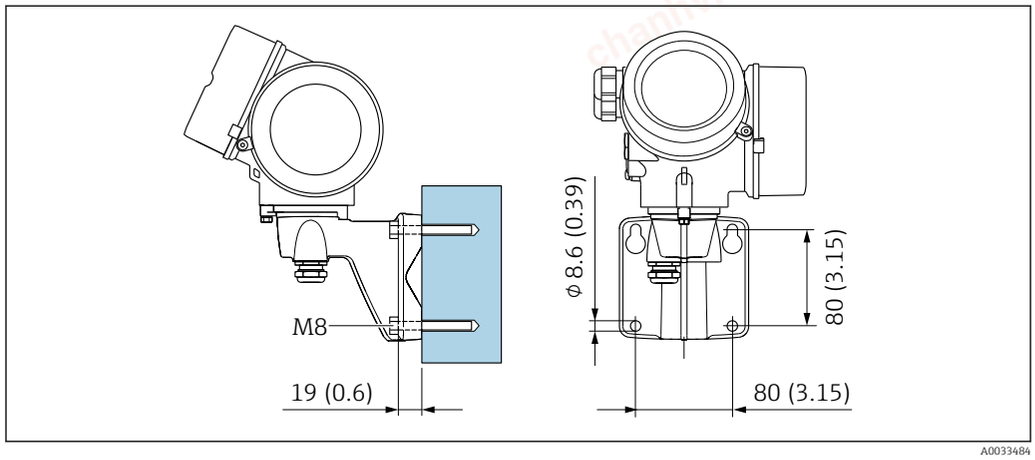

A0033484

13 *mm (in)*

chanhvinh.com

Post mounting

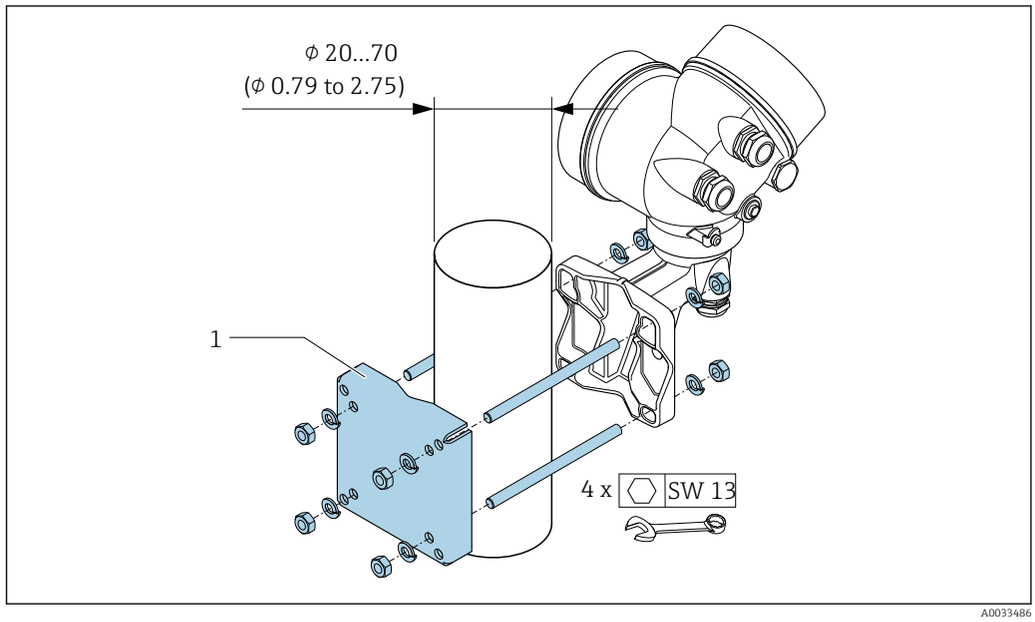

14 *mm (in)*

Special mounting instructions

Installation for delta heat measurements

The second temperature measurement is taken using a separate temperature sensor. The measuring device reads in this value via a communication interface.

- In the case of saturated steam delta heat measurements, the measuring device must be installed on the steam side.
- In the case of water delta heat measurements, the device can be installed on the cold or warm side.

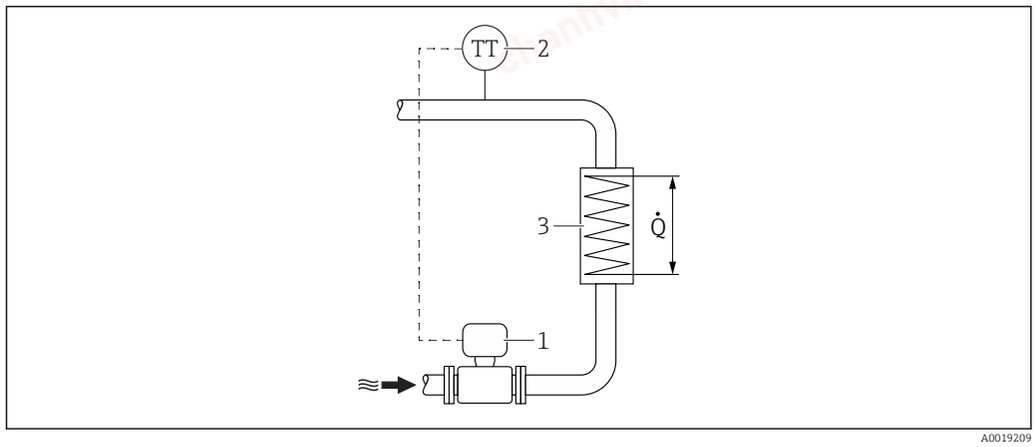

15 *Layout for delta heat measurement of saturated steam and water*

1 *Measuring device*
2 *Temperature sensor*
3 *Heat exchanger*
Q *Heat flow*

Protective cover

Observe the following minimum head clearance: 222 mm (8.74 in)

For information on the weather protection cover, see → 73

chanhvinh.com

Environment

Ambient temperature range

Compact version

Measuring device	Non-hazardous area:	−40 to +80 °C (−40 to +176 °F) [1]
	Ex i, Ex nA, Ex ec:	−40 to +70 °C (−40 to +158 °F) [1]
	Ex d, XP:	−40 to +60 °C (−40 to +140 °F) [1]
	Ex d, Ex ia:	−40 to +60 °C (−40 to +140 °F) [1]
Local display		−40 to +70 °C (−40 to +158 °F) [2] [1]

1) Additionally available as order code for "Test, certificate", option JN "Transmitter ambient temperature −50 °C (−58 °F)".
2) At temperatures < −20 °C (−4 °F), depending on the physical characteristics involved, it may no longer be possible to read the liquid crystal display.

Remote version

Transmitter	Non-hazardous area:	−40 to +80 °C (−40 to +176 °F) [1]
	Ex i, Ex nA, Ex ec:	−40 to +80 °C (−40 to +176 °F) [1]
	Ex d:	−40 to +60 °C (−40 to +140 °F) [1]
	Ex d, Ex ia:	−40 to +60 °C (−40 to +140 °F) [1]
Sensor	Non-hazardous area:	−40 to +85 °C (−40 to +185 °F) [1]
	Ex i, Ex nA, Ex ec:	−40 to +85 °C (−40 to +185 °F) [1]
	Ex d:	−40 to +85 °C (−40 to +185 °F) [1]
	Ex d, Ex ia:	−40 to +85 °C (−40 to +185 °F) [1]
Local display		−40 to +70 °C (−40 to +158 °F) [2] [1]

1) Additionally available as order code for "Test, certificate", option JN "Transmitter ambient temperature −50 °C (−58 °F)".
2) At temperatures < −20 °C (−4 °F), depending on the physical characteristics involved, it may no longer be possible to read the liquid crystal display.

▶ If operating outdoors:
Avoid direct sunlight, particularly in warm climatic regions.

You can order a weather protection cover from Endress+Hauser. → 73.

Storage temperature

All components apart from the display modules:
−50 to +80 °C (−58 to +176 °F)

Display modules

All components apart from the display modules:
−50 to +80 °C (−58 to +176 °F)

Remote display FHX50:
−50 to +80 °C (−58 to +176 °F)

Climate class

DIN EN 60068-2-38 (test Z/AD)

Degree of protection

Transmitter
- As standard: IP66/67, type 4X enclosure
- When housing is open: IP20, type 1 enclosure
- Display module: IP20, type 1 enclosure

Sensor
IP66/67, type 4X enclosure

chanhvinh.com

Connector
IP67, only in screwed situation

Vibration- and shock-resistance

Vibration sinusoidal, according to IEC 60068-2-6

Order code for "Housing", option B "GT18 dual compartment, 316L, compact"
- 2 to 8.4 Hz, 3.5 mm peak
- 8.4 to 500 Hz, 1 g peak

Order code for "Housing", option C "GT20 dual compartment, alu, coated, compact" or option J "GT20 dual compartment, alu, coated, remote" or option K "GT18 dual compartment, 316L, remote"
- 2 to 8.4 Hz, 7.5 mm peak
- 8.4 to 500 Hz, 2 g peak

Vibration broad-band random, according to IEC 60068-2-64

Order code for "Housing", option B "GT18 dual compartment, 316L, compact"
- 10 to 200 Hz, 0.003 g^2/Hz
- 200 to 500 Hz, 0.001 g^2/Hz
- Total: 0.93 g rms

Order code for "Housing", option C "GT20 dual compartment, alu, coated, compact" or option J "GT20 dual compartment, alu, coated, remote" or option K "GT18 dual compartment, 316L, remote")
- 10 to 200 Hz, 0.01 g^2/Hz
- 200 to 500 Hz, 0.003 g^2/Hz
- Total: 1.67 g rms

Shock half-sine, according to IEC 60068-2-27

- Order code for "Housing", option B "GT18 dual compartment, 316L, compact"
  6 ms 30 g
- Order code for "Housing", option C "GT20 dual compartment, alu, coated, compact" or option J "GT20 dual compartment, alu, coated, remote" or option K "GT18 dual compartment, 316L, remote")
  6 ms 50 g

Rough handling shocks according to IEC 60068-2-31

Electromagnetic compatibility (EMC)

As per IEC/EN 61326 and NAMUR Recommendation 21 (NE 21)

Details are provided in the Declaration of Conformity.

Process

Medium temperature range

DSC sensor [1)]

Order code for "Sensor version; DSC sensor; measuring tube"		
Option	**Description**	**Medium temperature range**
AA	Volume; 316L; 316L	−40 to +260 °C (−40 to +500 °F), stainless steel
BA	Volume high-temperature; 316L; 316L	−200 to +400 °C (−328 to +750 °F), stainless steel
CA	Mass; 316L; 316L	−200 to +400 °C (−328 to +750 °F), stainless steel

1) Capacitance sensor

Seals

Order code for "DSC sensor seal"		
Option	**Description**	**Medium temperature range**
A	Graphite (standard)	−200 to +400 °C (−328 to +752 °F)
B	Viton	−15 to +175 °C (+5 to +347 °F)

chanhvinh.com

Order code for "DSC sensor seal"		
Option	**Description**	**Medium temperature range**
C	Gylon	−200 to +260 °C (−328 to +500 °F)
D	Kalrez	−20 to +275 °C (−4 to +527 °F)

Pressure-temperature ratings

The following pressure/temperature diagrams apply to all pressure-bearing parts of the device and not just the process connection. The diagrams show the maximum permissible medium pressure depending on the specific medium temperature.

The pressure-temperature rating for the specific measuring device is programmed into the software. If values exceed the curve range a warning is displayed. Depending on the system configuration and sensor version, the pressure and temperature are determined by entering, reading in or calculating values.

Wafer flange for pressure ratings according to EN 1092-1, material group 13E0

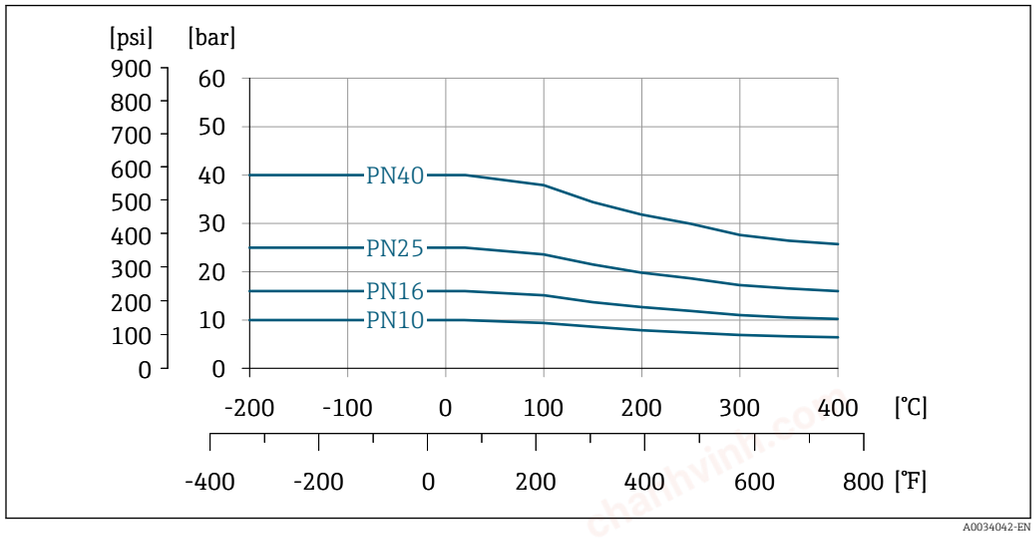

16 *Material: stainless steel, CF3M/1.4408*

Wafer flange for pressure ratings according to ASME B16.5, material group 2.2

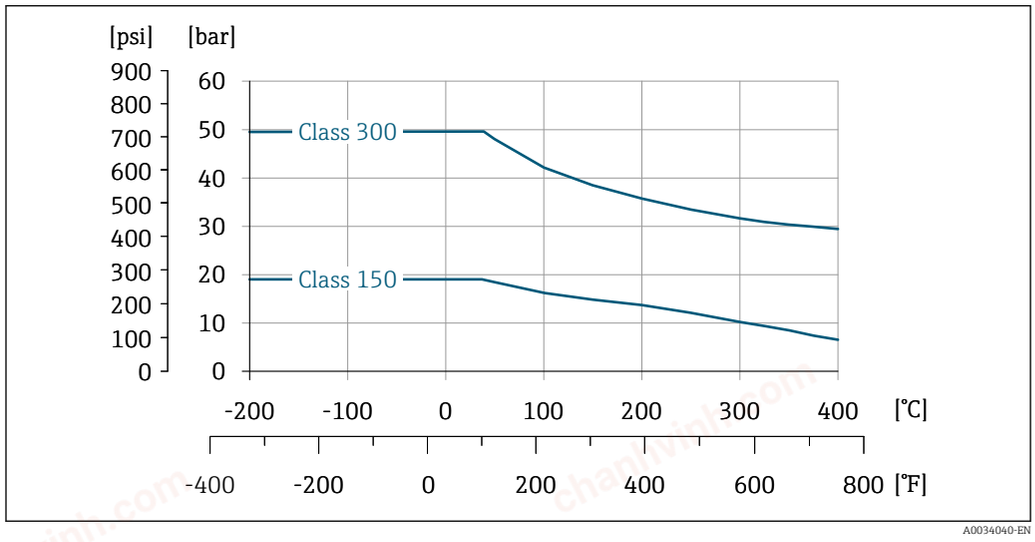

17 *Material: stainless steel, CF3M/1.4408*

chanhvinh.com

Wafer flange for connection to flanges according to JIS B2220

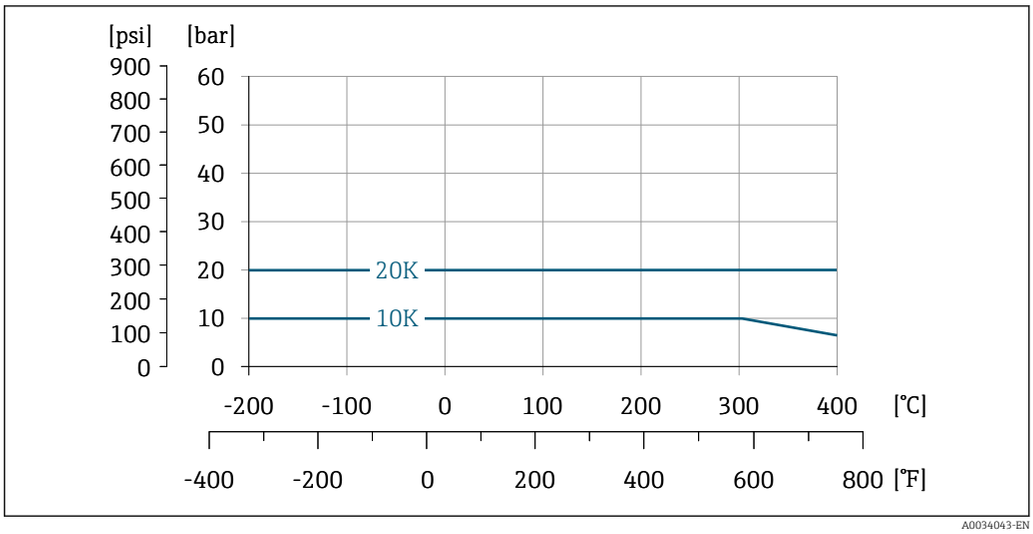

A0034043-EN

18 *Material: stainless steel, CF3M/1.4408*

Nominal pressure of sensor

The following overpressure resistance values apply to the sensor shaft in the event of a membrane rupture:

Sensor version; DSC sensor; measuring tube	Overpressure, sensor shaft in [bar a]
Volume	200
Volume high-temperature	200
Mass (integrated temperature measurement)	200

Pressure loss

For a precise calculation, use the Applicator→ 75.

Thermal insulation

For optimum temperature measurement and mass calculation, heat transfer at the sensor must be avoided for some fluids. This can be ensured by installing thermal insulation. A wide range of materials can be used for the required insulation.

This applies for:
- Compact version
- Remote sensor version

The maximum insulation height permitted is illustrated in the diagram:

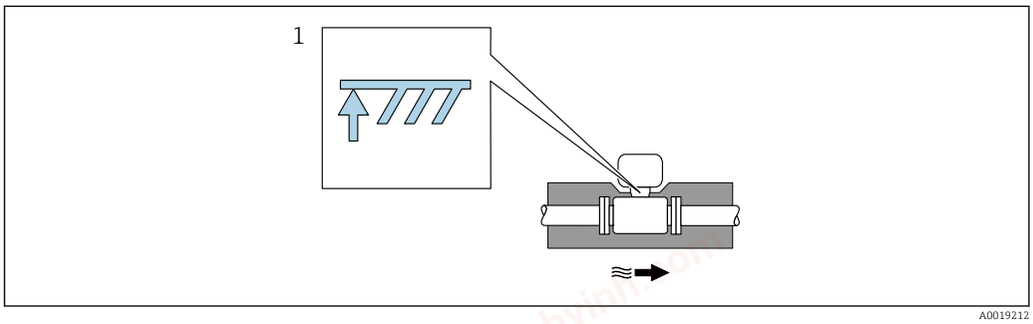

A0019212

1 *Maximum insulation height*

▶ When insulating, ensure that a sufficiently large area of the housing support remains exposed.

The uncovered part serves as a radiator and protects the electronics from overheating and excessive cooling.

chanhvinh.com

Mechanical construction

Dimensions in SI units

Pay attention to the information on diameter mismatch correction→ 37.

Compact version

Order code for "Housing", option J "GT20 two-chamber, aluminum, coated, remote"; option K "GT18 two-chamber, 316L, remote"

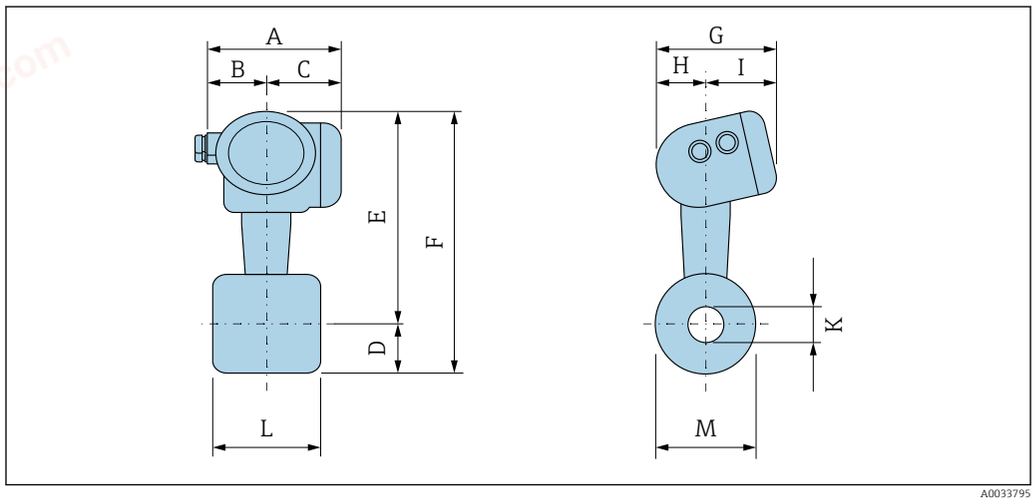

A0033795

Wafer flange according to:
- **EN 1092-1-B1 (DIN 2501): PN 10/16/25/40**
- **ASME B16.5: Class 150/300, Schedule 40**
- **JIS B2220: 10/20K, Schedule 40**

1.4404/F316/F316L
Order code for "Process connection", option DDS/DES/D1S/D2S/AAS/ABS/NDS/NES

DN [mm]	A [1] [mm]	B [mm]	C [1] [mm]	D [mm]	E [2] [3] [mm]	F [2] [3] [mm]	G [mm]	H [mm]	I [4] [mm]	K (D_i) [mm]	L [5] [mm]	M [mm]
15 [6]	140.2	51.7	88.5	23.4	252.5	275.9	159.9	58.2	101.7	16.5	65	45
25 [6]	140.2	51.7	88.5	32.4	262.0	294.4	159.9	58.2	101.7	27.6	65	64
40 [6]	140.2	51.7	88.5	41.5	270.5	312.0	159.9	58.2	101.7	42	65	82
50	140.2	51.7	88.5	46.5	277.5	324.0	159.9	58.2	101.7	53.5	65	92
80	140.2	51.7	88.5	64.0	291.5	355.5	159.9	58.2	101.7	80.3	65	127
100 [7]	140.2	51.7	88.5	79.1	304.0	383.1	159.9	58.2	101.7	104.8	65	157.2
100 [8]	140.2	51.7	88.5	79.1	303.2	382.3	159.9	58.2	101.7	102.3	65	157.2
150	140.2	51.7	88.5	108.5	330.0	438.5	159.9	58.2	101.7	156.8	65	215.9

1) For version with overvoltage protection: values + 8 mm
2) For version without local display: values - 10 mm
3) For high-temperature/low-temperature version: values + 29 mm
4) For version without local display: values - 7 mm
5) ±0.5 mm
6) Not available for JIS B2220, 10K
7) EN (DIN), ASME
8) JIS

chanhvinh.com

Wafer flange according to: ▪ ASME B16.5: Class 150/300, Schedule 80 ▪ JIS B2220: 10/20K, Schedule 80 1.4404/F316/F316L Order code for "Process connection", option AFS/AGS/NFS/NGS												
DN [mm]	A [1] [mm]	B [mm]	C [mm]	D [mm]	E [2] [3] [mm]	F [mm]	G [mm]	H [mm]	I [4] [mm]	K (D_i) [mm]	L [5] [mm]	M [mm]
15 [6] [7]	140.2	51.7	88.5	23.4	252.5	275.9	159.9	58.2	101.7	13.9	65	45
25 [6]	140.2	51.7	88.5	32.4	262.0	294.4	159.9	58.2	101.7	24.3	65	64
40	140.2	51.7	88.5	41.5	270.5	312.0	159.9	58.2	101.7	38.1	65	82
50	140.2	51.7	88.5	46.5	277.5	324.0	159.9	58.2	101.7	49.3	65	92
80	140.2	51.7	88.5	64.0	291.5	355.5	159.9	58.2	101.7	73.7	65	127
100 [8]	140.2	51.7	88.5	79.1	304.0	383.1	159.9	58.2	101.7	97.2	65	157.2
100 [9]	140.2	51.7	88.5	79.1	303.2	382.3	159.9	58.2	101.7	97.2	65	157.2
150	140.2	51.7	88.5	108.5	330.0	438.5	159.9	58.2	101.7	146.3	65	215.9

1) For version with overvoltage protection: values + 8 mm
2) For version without local display: values - 10 mm
3) For high-temperature/low-temperature version: values + 29 mm
4) For version without local display: values - 7 mm
5) ±0.5 mm
6) Not available for JIS B2220, 10K
7)
8) EN (DIN), ASME
9) JIS

Transmitter remote version

Order code for "Housing", option J "GT20 two-chamber, aluminum, coated, remote"; option K "GT18 two-chamber, 316L, remote"

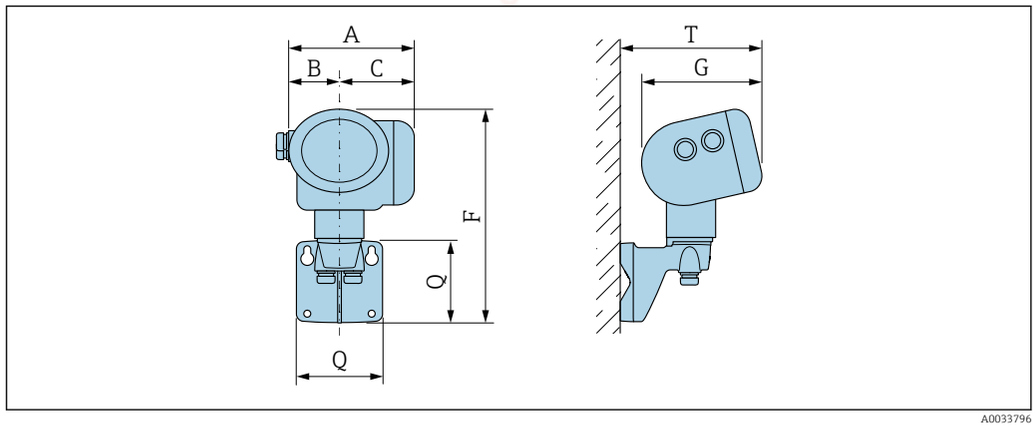

A0033796

A [1] [mm]	B [mm]	C [1] [mm]	F [2] [mm]	G [3] [mm]	Q [mm]	T [3] [mm]
140.2	51.7	88.5	254	159.9	107	191

1) For version with overvoltage protection: value + 8 mm
2) For version without local display: value - 10 mm
3) For version without local display: value - 7 mm

chanhvinh.com

Sensor remote version

Order code for "Housing", option J "GT20 two-chamber, aluminum, coated, remote"; option K "GT18 two-chamber, 316L, remote"

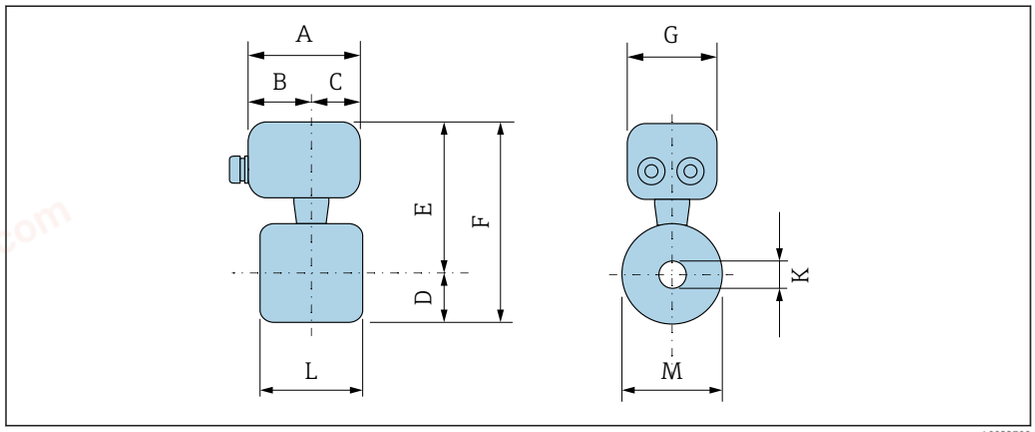

A0033798

Wafer flange according to:
- **EN 1092-1-B1 (DIN 2501): PN 10/16/25/40**
- **ASME B16.5: Class 150/300, Schedule 40**
- **JIS B2220: 10/20K, Schedule 40**

1.4404/F316/F316L
Order code for "Process connection", option DDS/DES/D1S/D2S/AAS/ABS/NDS/NES

DN [mm]	A [mm]	B [mm]	C [mm]	D [mm]	E [1] [mm]	F [1] [mm]	G [mm]	K (D_i) [mm]	L [2] [mm]	M [mm]
15 [3]	107.3	60	47.3	23.4	222.8	246.2	94.5	16.5	65	45
25 [3]	107.3	60	47.3	32.4	232.3	264.7	94.5	27.6	65	64
40 [3]	107.3	60	47.3	41.5	240.8	282.3	94.5	42	65	82
50	107.3	60	47.3	46.5	247.8	294.3	94.5	53.5	65	92
80	107.3	60	47.3	64.0	261.8	325.8	94.5	80.3	65	127
100 [4]	107.3	60	47.3	79.1	274.3	353.4	94.5	104.8	65	157.2
100 [5]	107.3	60	47.3	79.1	273.5	352.6	94.5	102.3	65	157.2
150	107.3	60	47.3	108.5	300.3	408.8	94.5	156.8	65	215.9

1) For high-temperature/low-temperature version: values +29 mm
2) ±0.5 mm
3) Not available for JIS B2220, 10K
4) EN (DIN), ASME
5) JIS

Wafer flange according to:
- **ASME B16.5: Class 150/300, Schedule 80**
- **JIS B2220: 10/20K, Schedule 80**

1.4404/F316/F316L
Order code for "Process connection", option AFS/AGS/NFS/NGS

DN [mm]	A [mm]	B [mm]	C [mm]	D [mm]	E [1] [mm]	F [mm]	G [mm]	K (D_i) [mm]	L [2] [mm]	M [mm]
15 [3]	107.3	60	47.3	23.4	222.8	246.2	94.5	13.9	65	45
25 [3]	107.3	60	47.3	32.4	232.3	264.7	94.5	24.3	65	64
40 [3]	107.3	60	47.3	41.5	240.8	282.3	94.5	38.1	65	82
50	107.3	60	47.3	46.5	247.8	294.3	94.5	49.3	65	92

chanhvinh.com

Wafer flange according to: ▪ ASME B16.5: Class 150/300, Schedule 80 ▪ JIS B2220: 10/20K, Schedule 80 1.4404/F316/F316L Order code for "Process connection", option AFS/AGS/NFS/NGS										
DN [mm]	A [mm]	B [mm]	C [mm]	D [mm]	E [1] [mm]	F [mm]	G [mm]	K (D_i) [mm]	L [2] [mm]	M [mm]
80	107.3	60	47.3	64.0	261.8	325.8	94.5	73.7	65	127
100 [4]	107.3	60	47.3	79.1	274.3	353.4	94.5	97.2	65	157.2
100 [5]	107.3	60	47.3	79.1	273.5	352.6	94.5	97.2	65	157.2
150	107.3	60	47.3	108.5	300.3	408.8	94.5	146.3	65	215.9

1) For high-temperature/low-temperature version: values + 29 mm
2) ±0.5 mm
3) Not available for JIS B2220, 10K
4) EN (DIN), ASME
5) JIS

Accessories

Flow conditioner

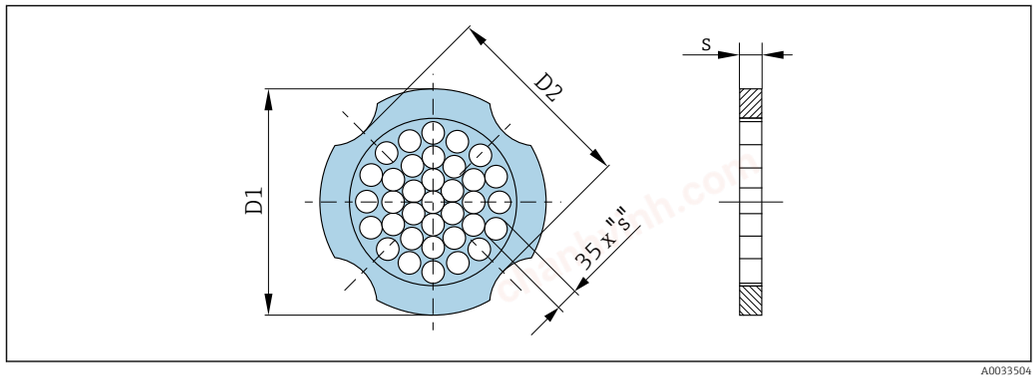

A0033504

Used in combination with flanges according to DIN EN 1092-1: PN 10 1.4404 (316, 316L) Order code for "Accessory enclosed", option PF			
DN [mm]	Centering diameter [mm]	D1 [1] / D2 [2]	s [mm]
15	54.3	D2	2.0
25	74.3	D1	3.5
40	95.3	D1	5.3
50	110.0	D2	6.8
80	145.3	D2	10.1
100	165.3	D2	13.3
150	221.0	D2	20.0

1) The flow conditioner is fitted at the outer diameter between the bolts.
2) The flow conditioner is fitted at the indentations between the bolts.

chanhvinh.com

Used in combination with flanges according to DIN EN 1092-1: PN 16 1.4404 (316, 316L) Order code for "Accessory enclosed", option PF			
DN [mm]	**Centering diameter [mm]**	**D1 [1] / D2 [2]**	**s [mm]**
15	54.3	D2	2.0
25	74.3	D1	3.5
40	95.3	D1	5.3
50	110.0	D2	6.8
80	145.3	D2	10.1
100	165.3	D2	13.3
150	221.0	D2	20.0

1) The flow conditioner is fitted at the outer diameter between the bolts.
2) The flow conditioner is fitted at the indentations between the bolts.

Used in combination with flanges according to DIN EN 1092-1: PN 25 1.4404 (316, 316L) Order code for "Accessory enclosed", option PF			
DN [mm]	**Centering diameter [mm]**	**D1 [1] / D2 [2]**	**s [mm]**
15	54.3	D2	2.0
25	74.3	D1	3.5
40	95.3	D1	5.3
50	110.0	D2	6.8
80	145.3	D2	10.1
100	171.3	D1	13.3
150	227.0	D2	20.0

1) The flow conditioner is fitted at the outer diameter between the bolts.
2) The flow conditioner is fitted at the indentations between the bolts.

Used in combination with flanges according to DIN EN 1092-1: PN 40 1.4404 (316, 316L) Order code for "Accessory enclosed", option PF			
DN [mm]	**Centering diameter [mm]**	**D1 [1] / D2 [2]**	**s [mm]**
15	54.3	D2	2.0
25	74.3	D1	3.5
40	95.3	D1	5.3
50	110.0	D2	6.8
80	145.3	D2	10.1
100	171.3	D1	13.3
150	227.0	D2	20.0

1) The flow conditioner is fitted at the outer diameter between the bolts.
2) The flow conditioner is fitted at the indentations between the bolts.

chanhvinh.com

Used in combination with flanges according to ASME B16.5: Class 150 1.4404 (316, 316L) Order code for "Accessory enclosed", option PF			
DN [mm]	**Centering diameter [mm]**	**D1 [1] / D2 [2]**	**s [mm]**
15	50.1	D1	2.0
25	69.2	D2	3.5
40	88.2	D2	5.3
50	106.6	D2	6.8
80	138.4	D1	10.1
100	176.5	D2	13.3
150	223.5	D1	20.0

1) The flow conditioner is fitted at the outer diameter between the bolts.
2) The flow conditioner is fitted at the indentations between the bolts.

Used in combination with flanges according to ASME B16.5: Class 300 1.4404 (316, 316L) Order code for "Accessory enclosed", option PF			
DN [mm]	**Centering diameter [mm]**	**D1 [1] / D2 [2]**	**s [mm]**
15	56.5	D1	2.0
25	74.3	D1	3.5
40	97.7	D2	5.3
50	113.0	D1	6.8
80	151.3	D1	10.1
100	182.6	D1	13.3
150	252.0	D1	20.0

1) The flow conditioner is fitted at the outer diameter between the bolts.
2) The flow conditioner is fitted at the indentations between the bolts.

Used in combination with flanges according to JIS B2220: 10K 1.4404 (316, 316L) Order code for "Accessory enclosed", option PF			
DN [mm]	**Centering diameter [mm]**	**D1 [1] / D2 [2]**	**s [mm]**
15	60.3	D2	2.0
25	76.3	D2	3.5
40	91.3	D2	5.3
50	106.6	D2	6.8
80	136.3	D2	10.1
100	161.3	D2	13.3
150	221.0	D2	20.0

1) The flow conditioner is fitted at the outer diameter between the bolts.
2) The flow conditioner is fitted at the indentations between the bolts.

chanhvinh.com

Used in combination with flanges according to JIS B2220: 20K 1.4404 (316, 316L) Order code for "Accessory enclosed", option PF			
DN [mm]	**Centering diameter [mm]**	**D1 [1] / D2 [2]**	**s [mm]**
15	60.3	D2	2.0
25	76.3	D2	3.5
40	91.3	D2	5.3
50	106.6	D2	6.8
80	142.3	D1	10.1
100	167.3	D1	13.3
150	240.0	D1	20.0

1) The flow conditioner is fitted at the outer diameter between the bolts.
2) The flow conditioner is fitted at the indentations between the bolts.

Dimensions in US units

Pay attention to the information on diameter mismatch correction→ 37.

Compact version

Order code for "Housing", option B "GT18, two-chamber, 316L, compact"; option C "GT20, two-chamber, aluminum, coated, compact"

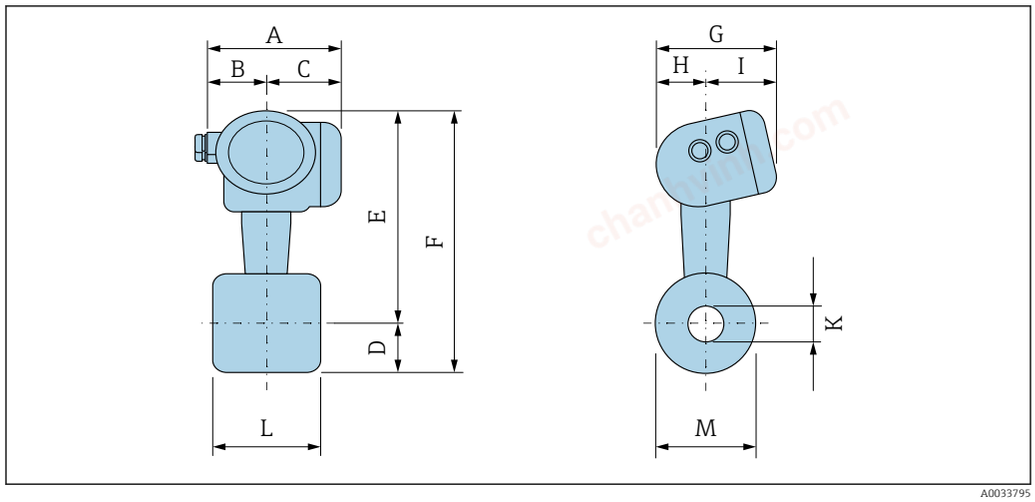

A0033795

Wafer flange according to: ▪ EN 1092-1-B1 (DIN 2501): PN 10/16/25/40 ▪ ASME B16.5: Class 150/300, Schedule 40 ▪ JIS B2220: 10/20K, Schedule 40 1.4404/F316/F316L Order code for "Process connection", option DDS/DES/D1S/D2S/AAS/ABS/NDS/NES												
DN [in]	**A [1] [in]**	**B [in]**	**C [1] [in]**	**D [in]**	**E [2] [3] [in]**	**F [2] [3] [in]**	**G [in]**	**H [in]**	**[4] [in]**	**K (D_i) [in]**	**L [5] [in]**	**M [in]**
½	5.52	2.04	3.48	0.92	9.94	10.9	6.3	2.29	4	0.65	2.56	1.77
1	5.52	2.04	3.48	1.28	10.3	11.6	6.3	2.29	4	1.09	2.56	2.52
1 ½	5.52	2.04	3.48	1.63	10.6	12.3	6.3	2.29	4	1.65	2.56	3.23
2	5.52	2.04	3.48	1.83	10.9	12.8	6.3	2.29	4	2.11	2.56	3.62
3	5.52	2.04	3.48	2.52	11.5	14	6.3	2.29	4	3.16	2.56	5

chanhvinh.com

Wafer flange according to:
- **EN 1092-1-B1 (DIN 2501): PN 10/16/25/40**
- **ASME B16.5: Class 150/300, Schedule 40**
- **JIS B2220: 10/20K, Schedule 40**

1.4404/F316/F316L
Order code for "Process connection", option DDS/DES/D1S/D2S/AAS/ABS/NDS/NES

DN [in]	A [1] [in]	B [in]	C [1] [in]	D [in]	E [2] [3] [in]	F [2] [3] [in]	G [in]	H [in]	[4] [in]	K (D_i) [in]	L [5] [in]	M [in]
4	5.52	2.04	3.48	3.11	12	15.1	6.3	2.29	4	4.13	2.56	6.19
6	5.52	2.04	3.48	4.27	13	17.3	6.3	2.29	4	6.17	2.56	8.5

1) For version with overvoltage protection: values + 0.31 in
2) For version without local display: values - 0.39 in
3) For high-temperature/low-temperature version: values + 1.14 in
4) For version without local display: values - 0.28 in
5) ±0.02 in

Wafer flange according to:
- **ASME B16.5: Class 150/300, Schedule 80**
- **JIS B2220: 10/20K, Schedule 80**

1.4404/F316/F316L
Order code for "Process connection", option AFS/AGS/NFS/NGS

DN [in]	A [1] [in]	B [in]	C [in]	D [in]	E [2] [3] [in]	F [in]	G [in]	H [in]	[4] [in]	K (D_i) [in]	L [5] [in]	M [in]
½	5.52	2.04	3.48	0.92	9.94	10.9	6.3	2.29	4	0.55	2.56	1.77
1	5.52	2.04	3.48	1.28	10.3	11.6	6.3	2.29	4	0.96	2.56	2.52
1 ½	5.52	2.04	3.48	1.63	10.6	12.3	6.3	2.29	4	1.5	2.56	3.23
2	5.52	2.04	3.48	1.83	10.9	12.8	6.3	2.29	4	1.94	2.56	3.62
3	5.52	2.04	3.48	2.52	11.5	14	6.3	2.29	4	2.9	2.56	5
4	5.52	2.04	3.48	3.11	12	15.1	6.3	2.29	4	3.83	2.56	6.19
6	5.52	2.04	3.48	4.27	13	17.3	6.3	2.29	4	5.76	2.56	8.5

1) For version with overvoltage protection: values + 0.31 in
2) For version without local display: values - 0.39 in
3) For high-temperature/low-temperature version: values + 1.14 in
4) For version without local display: values - 0.28 in
5) ±0.02 in

Transmitter remote version

Order code for "Housing", option J "GT20 two-chamber, aluminum, coated, remote"; option K "GT18 two-chamber, 316L, remote"

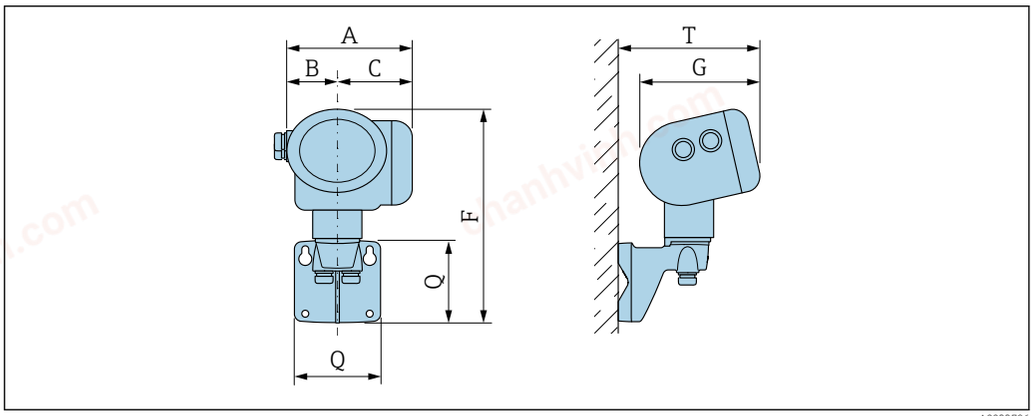

A0033796

chanhvinh.com

A [1] [in]	B [in]	C [1] [in]	F [2] [in]	G [3] [in]	Q [in]	T [3] [in]
5.52	2.04	3.48	10	6.3	4.21	7.52

1) For version with overvoltage protection: value + 0.31 in
2) For version without local display: value - 0.39 in
3) For version without local display: value - 0.28 in

Sensor remote version

Order code for "Housing", option J "GT20 two-chamber, aluminum, coated, remote"; option K "GT18 two-chamber, 316L, remote"

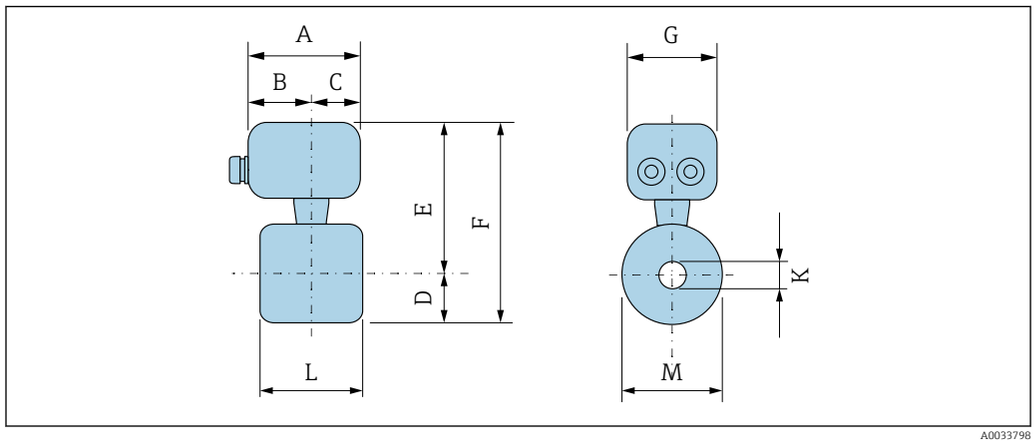

A0033798

Wafer flange according to:
- **EN 1092-1-B1 (DIN 2501): PN 10/16/25/40**
- **ASME B16.5: Class 150/300, Schedule 40**
- **JIS B2220: 10/20K, Schedule 40**

1.4404/F316/F316L
Order code for "Process connection", option DDS/DES/D1S/D2S/AAS/ABS/NDS/NES

DN [in]	A [in]	B [in]	C [in]	D [in]	E [1] [in]	F [1] [in]	G [in]	K (D_i) [in]	L [2] [in]	M [in]
½	4.22	2.36	1.86	0.92	8.77	9.69	3.72	0.65	2.56	1.77
1	4.22	2.36	1.86	1.28	9.15	10.4	3.72	1.09	2.56	2.52
1 ½	4.22	2.36	1.86	1.63	9.48	11.1	3.72	1.65	2.56	3.23
2	4.22	2.36	1.86	1.83	9.76	11.6	3.72	2.11	2.56	3.62
3	4.22	2.36	1.86	2.52	10.3	12.8	3.72	3.16	2.56	5
4	4.22	2.36	1.86	3.11	10.8	13.9	3.72	4.13	2.56	6.19
6	4.22	2.36	1.86	4.27	11.8	16.1	3.72	6.17	2.56	8.5

1) For high-temperature/low-temperature version: values + 1.14 in
2) ±0.02 in

chanhvinh.com

Wafer flange according to: ▪ ASME B16.5: Class 150/300, Schedule 80 ▪ JIS B2220: 10/20K, Schedule 80 1.4404/F316/F316L Order code for "Process connection", option AFS/AGS/NFS/NGS										
DN [in]	A [in]	B [in]	C [in]	D [in]	E [1] [in]	F [in]	G [in]	K (D_i) [in]	L [2] [in]	M [in]
½	4.22	2.36	1.86	0.92	8.77	9.69	3.72	0.55	2.56	1.77
1	4.22	2.36	1.86	1.28	9.15	10.4	3.72	0.96	2.56	2.52
1 ½	4.22	2.36	1.86	1.63	9.48	11.1	3.72	1.5	2.56	3.23
2	4.22	2.36	1.86	1.83	9.76	11.6	3.72	1.94	2.56	3.62
3	4.22	2.36	1.86	2.52	10.3	12.8	3.72	2.9	2.56	5
4	4.22	2.36	1.86	3.11	10.8	13.9	3.72	3.83	2.56	6.19
6	4.22	2.36	1.86	4.27	11.8	16.1	3.72	5.76	2.56	8.5

1) For high-temperature/low-temperature version: values + 1.14 in
2) ±0.02 in

Accessories

Flow conditioner

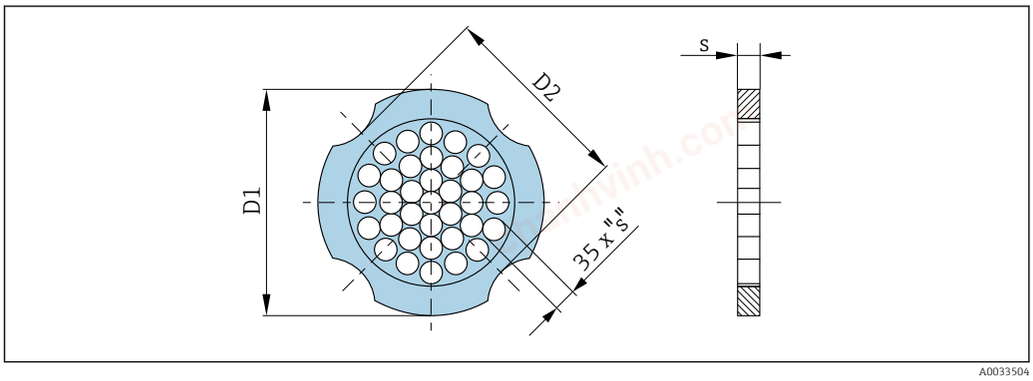

A0033504

Used in combination with flanges according to ASME B16.5: Class 150 1.4404 (316, 316L) Order code for "Accessory enclosed", option PF			
DN [in]	Centering diameter [in]	D1 [1] / D2 [2]	s [in]
½	1.97	D1	0.08
1	2.72	D2	0.14
1½	3.47	D2	0.21
2	4.09	D2	0.27
3	5.45	D1	0.40
4	6.95	D2	0.52
6	8.81	D1	0.79

1) The flow conditioner is fitted at the outer diameter between the bolts.
2) The flow conditioner is fitted at the indentations between the bolts.

chanhvinh.com

Used in combination with flanges according to ASME B16.5: Class 300 1.4404 (316, 316L) Order code for "Accessory enclosed", option PF			
DN [in]	**Centering diameter [in]**	**D1 [1] / D2 [2]**	**s [in]**
½	2.22	D1	0.08
1	2.93	D1	0.14
1½	3.85	D2	0.21
2	4.45	D1	0.27
3	5.96	D1	0.40
4	7.19	D1	0.52
6	9.92	D1	0.79

1) The flow conditioner is fitted at the outer diameter between the bolts.
2) The flow conditioner is fitted at the indentations between the bolts.

Weight

Compact version

Weight data:
- Including the transmitter:
  - Order code for "Housing", option C "GT20, two-chamber, aluminum, coated, compact" 1.8 kg (4.0 lb):
  - Order code for "Housing", option B "GT18 two-chamber, 316L, compact"4.5 kg (9.9 lb):
- Excluding packaging material

Weight in SI units

DN [mm]	Weight [kg]	
	Order code for "Housing", option C "GT20 two-chamber, aluminum, coated, compact" [1]	**Order code for "Housing", option B "GT18 two-chamber, 316L, compact" [1]**
15	3.1	5.8
25	3.3	6.0
40	3.9	6.6
50	4.2	6.9
80	5.6	8.3
100	6.6	9.3
150	9.1	11.8

1) For high-temperature/low-temperature version: values + 0.2 kg

Weight in US units

DN [in]	Weight [lbs]	
	Order code for "Housing", option C "GT20 two-chamber, aluminum, coated, compact" [1]	**Order code for "Housing", option B "GT18 two-chamber, 316L, compact" [1]**
½	6.9	12.9
1	7.4	13.3
1½	8.7	14.6
2	9.4	15.3
3	12.4	18.4

chanhvinh.com

DN [in]	Weight [lbs]	
	Order code for "Housing", option C "GT20 two-chamber, aluminum, coated, compact" 1)	Order code for "Housing", option B "GT18 two-chamber, 316L, compact" 1)
4	14.6	20.6
6	20.2	26.1

1) For high-temperature/low-temperature version: values +0.4 lbs

Transmitter remote version

Wall-mount housing

Dependent on the material of wall-mount housing:
- Order code for "Housing" option J "GT20 two-chamber, aluminum, coated, remote"2.4 kg (5.2 lb):
- Order code for "Housing", option K "GT18 two-chamber, 316L, remote"6.0 kg (13.2 lb):

Sensor remote version

Weight data:
- Including sensor connection housing:
  - Order code for "Housing" option J "GT20 two-chamber, aluminum, coated, remote"0.8 kg (1.8 lb):
  - Order code for "Housing", option K "GT18 two-chamber, 316L, remote"2.0 kg (4.4 lb):
- Excluding the connecting cable
- Excluding packaging material

Weight in SI units

DN [mm]	Weight [kg]	
	sensor connection housing Order code for "Housing", option J "GT20 two-chamber, aluminum, coated, remote" 1)	sensor connection housing Order code for "Housing", option K "GT18 two-chamber, 316L, remote" 1)
15	2.1	3.3
25	2.3	3.5
40	2.9	4.1
50	3.2	4.4
80	4.6	5.8
100	5.6	6.8
150	8.1	9.3

1) For high-temperature/low-temperature version: values + 0.2 kg

Weight in US units

DN [in]	Weight [lbs]	
	sensor connection housing Order code for "Housing", option J "GT20 two-chamber, aluminum, coated, remote" 1)	sensor connection housing Order code for "Housing", option K "GT18 two-chamber, 316L, remote" 1)
½	4.5	7.3
1	5.0	7.8
1½	6.3	9.1
2	7.0	9.7
3	10.0	12.8

chanhvinh.com

DN [in]	Weight [lbs]	
	sensor connection housing Order code for "Housing", option J "GT20 two-chamber, aluminum, coated, remote" 1)	sensor connection housing Order code for "Housing", option K "GT18 two-chamber, 316L, remote" 1)
4	12.3	15.0
6	17.3	20.5

1) For high-temperature/low-temperature version: values +0.4 lbs

Accessories

Flow conditioner

Weight in SI units

DN 1) [mm]	Pressure rating	Weight [kg]
15	PN 10 to 40	0.04
25	PN 10 to 40	0.1
40	PN 10 to 40	0.3
50	PN 10 to 40	0.5
80	PN 10 to 40	1.4
100	PN10 to 40	2.4
150	PN 10/16 PN 25/40	6.3 7.8

1) EN (DIN)

DN 1) [mm]	Pressure rating	Weight [kg]
15	Class 150 Class 300	0.03 0.04
25	Class 150 Class 300	0.1
40	Class 150 Class 300	0.3
50	Class 150 Class 300	0.5
80	Class 150 Class 300	1.2 1.4
100	Class 150 Class 300	2.7
150	Class 150 Class 300	6.3 7.8

1) ASME

DN 1) [mm]	Pressure rating	Weight [kg]
15	20K	0.06
25	20K	0.1
40	20K	0.3

chanhvinh.com

DN [1] [mm]	Pressure rating	Weight [kg]
50	10K 20K	0.5
80	10K 20K	1.1
100	10K 20K	1.80
150	10K 20K	4.5 5.5

1) JIS

Weight in US units

DN [1] [in]	Pressure rating	Weight [lbs]
½	Class 150 Class 300	0.07 0.09
1	Class 150 Class 300	0.3
1½	Class 150 Class 300	0.7
2	Class 150 Class 300	1.1
3	Class 150 Class 300	2.6 3.1
4	Class 150 Class 300	6.0
6	Class 150 Class 300	14.0 16.0

1) ASME

Materials

Transmitter housing

Compact version

- Order code for "Housing", option B "GT18 two-chamber, 316L, compact":
  Stainless steel, CF3M
- Order code for "Housing", option C "GT20, two-chamber, aluminum, coated, compact":
  Aluminum, AlSi10Mg, coated
- Window material: glass

Remote version

- Order code for "Housing" option J "GT20 two-chamber, aluminum, coated, remote":
  Aluminum, AlSi10Mg, coated
- Order code for "Housing", option K "GT18 two-chamber, 316L, remote":
  For maximum corrosion resistance: Stainless steel, CF3M
- Window material: glass

chanhvinh.com

Cable entries/cable glands

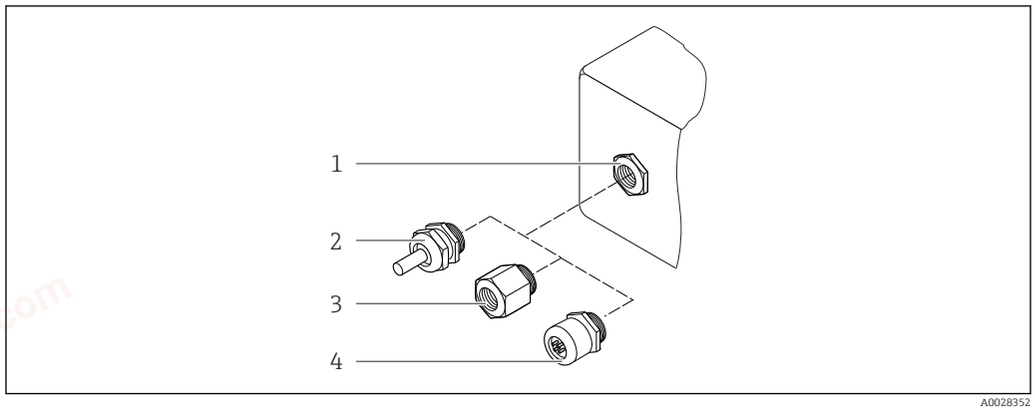

19 *Possible cable entries/cable glands*

1 *Female thread M20 × 1.5*
2 *Cable gland M20 × 1.5*
3 *Adapter for cable entry with female thread G ½" or NPT ½"*
4 *Device plugs*

Order code for "Housing", option B "GT18 dual compartment, 316L, compact" option K "GT18 dual compartment, 316L, remote"

Cable entry/cable gland	Type of protection	Material
Cable gland M20 × 1.5	▪ Non-hazardous area ▪ Ex ia ▪ Ex ic ▪ Ex nA, Ex ec ▪ Ex tb	Stainless steel ,1.4404
Adapter for cable entry with female thread G ½"	Non-hazardous area and hazardous area (except for XP)	Stainless steel, 1.4404 (316L)
Adapter for cable entry with female thread NPT ½"	Non-hazardous area and hazardous area	

Order code for "Housing": option C "GT20 dual compartment, aluminum, coated, compact", option J "GT20 dual compartment, aluminum, coated remote"

Cable entry/cable gland	Type of protection	Material
Cable gland M20 × 1.5	▪ Non-hazardous area ▪ Ex ia ▪ Ex ic	Plastic
	Adapter for cable entry with female thread G ½"	Nickel-plated brass
Adapter for cable entry with female thread NPT ½"	Non-hazardous area and hazardous area (except for XP)	Nickel-plated brass
Thread NPT ½" via adapter	Non-hazardous area and hazardous area	

Connecting cable for remote version

- Standard cable: PVC cable with copper shield
- Reinforced cable: PVC cable with copper shield and additional steel wire braided jacket

chanhvinh.com

Sensor connection housing

The material of the sensor connection housing is dependent on the material selected for the transmitter housing.

- Order code for "Housing" option J "GT20 two-chamber, aluminum, coated, remote":
  Coated aluminum AlSi10Mg
- Order code for "Housing", option K "GT18 two-chamber, 316L, remote":
  Stainless cast steel, 1.4408 (CF3M)
  Compliant with:
  - NACE MR0175
  - NACE MR0103

Measuring tubes

DN 15 to 150 (½ to 6"), pressure ratings PN 10/16/25/40, Class 150/300 , as well as JIS 10K/20K:
Stainless cast steel, CF3M/1.4408
Compliant with:
- NACE MR0175
- NACE MR0103

DSC sensor

Order code for "Sensor version; DSC sensor; measuring tube", option **AA, BA, CA**

Pressure ratings PN 10/16/25/40, Class 150/300, as well as JIS 10K/20K:
Parts in contact with medium (marked as "wet" on the DSC sensor flange):
- Stainless steel 1.4404 and 316 and 316L
- Compliant with:
  - NACE MR0175/ISO 15156-2015
  - NACE MR0103/ISO 17945-2015

Parts not in contact with medium:
Stainless steel 1.4301 (304)

Seals

- Graphite (standard)
  Sigraflex foil™ (BAM-tested for oxygen applications, "high-grade in the context of TA-Luft Clean Air Guidelines")
- FPM (Viton™)
- Kalrez 6375™
- Gylon 3504™ (BAM-tested for oxygen applications, "high-grade in the context of TA-Luft clean air guidelines")

Housing support

Stainless steel, 1.4408 (CF3M)

Screws for DSC sensor

Order code for "Sensor version", option AA, BA, CA
Stainless steel, A2-80 according to ISO 3506-1 (304)

Accessories

Protective cover

Stainless steel, 1.4404 (316L)

Flow conditioner

- Stainless steel, multiple certifications, 1.4404 (316, 316L)
- Compliant with:
  - NACE MR0175-2003
  - NACE MR0103-2003

chanhvinh.com

Operability

Operating concept

Operator-oriented menu structure for user-specific tasks
- Commissioning
- Operation
- Diagnostics
- Expert level

Quick and safe commissioning
- Guided menus ("Make-it-run" wizards) for applications
- Menu guidance with brief explanations of the individual parameter functions

Reliable operation
- Operation in the following languages:
  - Via local display:
    English, German, French, Spanish, Italian, Dutch, Portuguese, Polish, Russian, Swedish, Turkish, Chinese, Japanese, Korean, Bahasa (Indonesian), Vietnamese, Czech
  - Via "FieldCare" operating tool:
    English, German, French, Spanish, Italian, Chinese, Japanese
- Uniform operating philosophy applied to device and operating tools
- If replacing the electronic module, transfer the device configuration via the integrated memory (integrated HistoROM) which contains the process and measuring device data and the event logbook. No need to reconfigure.

Efficient diagnostics increase measurement availability
- Troubleshooting measures can be called up via the device and in the operating tools
- Diverse simulation options, logbook for events that occur and optional line recorder functions

Languages

Can be operated in the following languages:
- Via local display:
  English, German, French, Spanish, Italian, Dutch, Portuguese, Polish, Russian, Swedish, Turkish, Chinese, Japanese, Korean, Bahasa (Indonesian), Vietnamese, Czech
- Via "FieldCare" operating tool:
  English, German, French, Spanish, Italian, Chinese, Japanese

Local operation

Via display module

Two display modules are available:

Order code for "Display; Operation", option C "SD02"	Order code for "Display; Operation", option E "SD03"
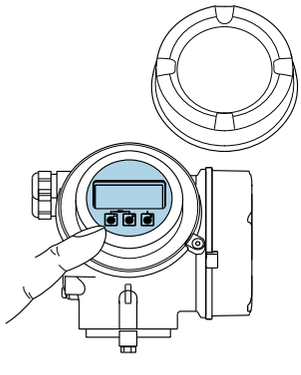 A0032219	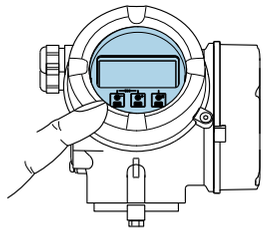 A0032221
1 Operation with pushbuttons	*1 Operation with touch control*

Display elements
- 4-line, illuminated, graphic display
- White background lighting; switches to red in event of device errors
- Format for displaying measured variables and status variables can be individually configured
- Permitted ambient temperature for the display: −20 to +60 °C (−4 to +140 °F)
  The readability of the display may be impaired at temperatures outside the temperature range.

chanhvinh.com

Operating elements

- Operation with 3 push buttons with open housing: ⊞, ⊟, Ⓔ
  or
- External operation via touch control (3 optical keys) without opening the housing: ⊞, ⊟, Ⓔ
- Operating elements also accessible in the various zones of the hazardous area

Additional functionality

- Data backup function
  The device configuration can be saved in the display module.
- Data comparison function
  The device configuration saved in the display module can be compared to the current device configuration.
- Data transfer function
  The transmitter configuration can be transmitted to another device using the display module.

Via remote display FHX50

The remote display FHX50 can be ordered as an optional extra→ 🖹 73.

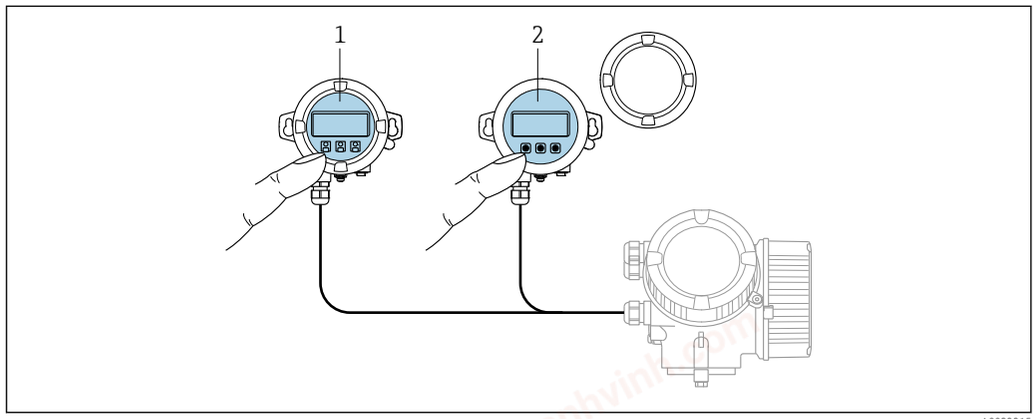

20 *FHX50 operating options*

1 *SD02 display and operating module, push buttons: cover must be opened for operation*
2 *SD03 display and operating module, optical buttons: operation possible through cover glass*

Display and operating elements

The display and operating elements correspond to those of the display module .

Remote operation

Via HART protocol

This communication interface is available in device versions with a HART output.

chanhvinh.com

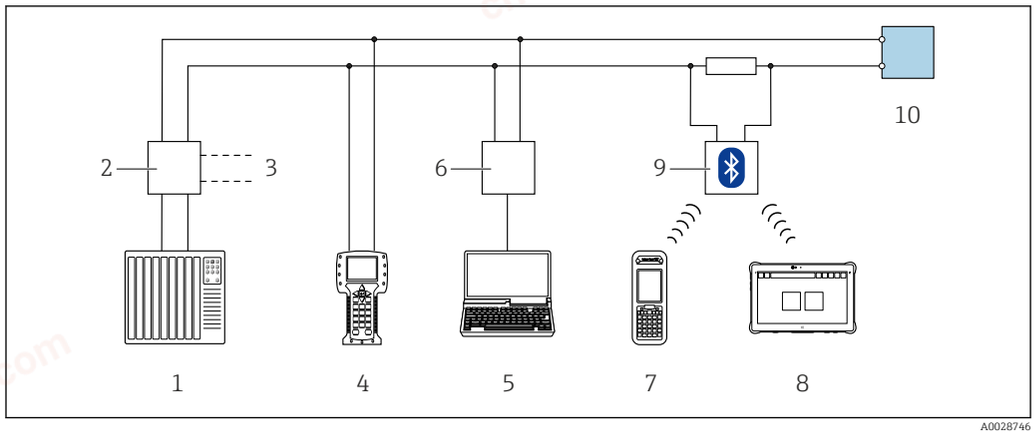

21 *Options for remote operation via HART protocol (passive)*

1 *Control system (e.g. PLC)*
2 *Transmitter power supply unit, e.g. RN221N (with communication resistor)*
3 *Connection for Commubox FXA195 and Field Communicator 475*
4 *Field Communicator 475*
5 *Computer with web browser (e.g. Internet Explorer) for accessing computers with operating tool (e.g. FieldCare, DeviceCare, AMS Device Manager, SIMATIC PDM) with COM DTM "CDI Communication TCP/IP"*
6 *Commubox FXA195 (USB)*
7 *Field Xpert SFX350 or SFX370*
8 *VIATOR Bluetooth modem with connecting cable*
9 *Transmitter*

Via PROFIBUS PA network

This communication interface is available in device versions with PROFIBUS PA.

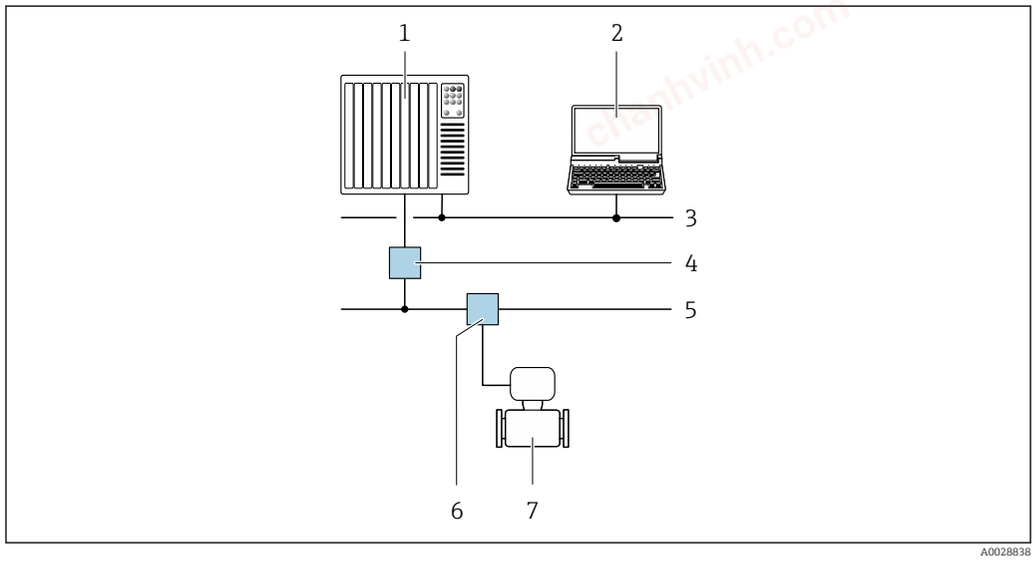

22 *Options for remote operation via PROFIBUS PA network*

1 *Automation system*
2 *Computer with PROFIBUS network card*
3 *PROFIBUS DP network*
4 *Segment coupler PROFIBUS DP/PA*
5 *PROFIBUS PA network*
6 *T-box*
7 *Measuring device*

Via FOUNDATION Fieldbus network

This communication interface is available in device versions with FOUNDATION Fieldbus.

chanhvinh.com

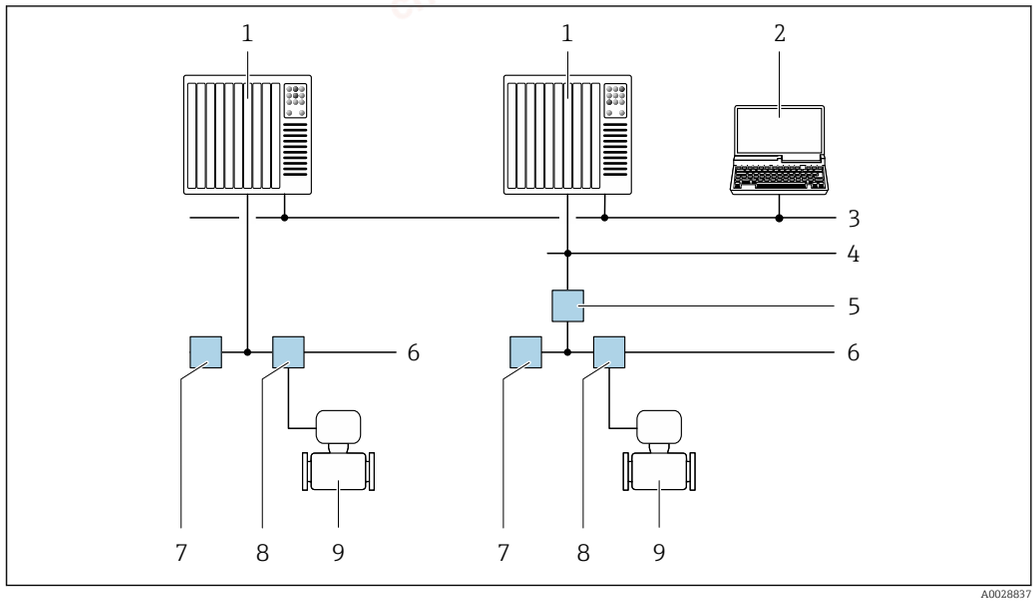

A0028837

23 Options for remote operation via FOUNDATION Fieldbus network

1 *Automation system*
2 *Computer with FOUNDATION Fieldbus network card*
3 *Industry network*
4 *High Speed Ethernet FF-HSE network*
5 *Segment coupler FF-HSE/FF-H1*
6 *FOUNDATION Fieldbus FF-H1 network*
7 *Power supply FF-H1 network*
8 *T-box*
9 *Measuring device*

Service interface

Via service interface (CDI)

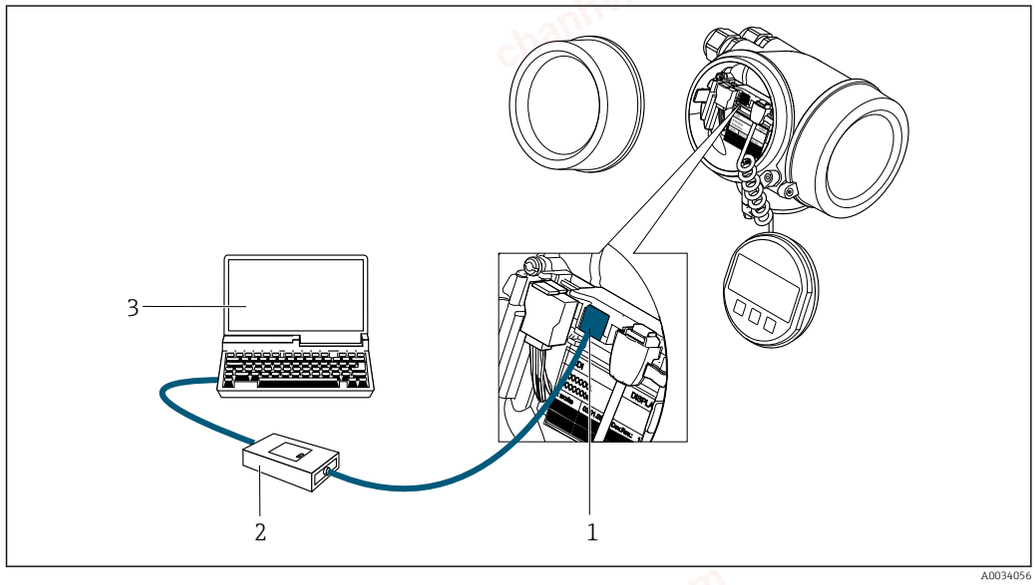

A0034056

1 *Service interface (CDI = Endress+Hauser Common Data Interface) of the measuring device*
2 *Commubox FXA291*
3 *Computer with FieldCare operating tool with COM DTM CDI Communication FXA291*

Certificates and approvals

Currently available certificates and approvals can be called up via the product configurator.

chanhvinh.com

CE mark

The device meets the legal requirements of the applicable EU Directives. These are listed in the corresponding EU Declaration of Conformity along with the standards applied.

Endress+Hauser confirms successful testing of the device by affixing to it the CE mark.

RCM-tick symbol

The measuring system meets the EMC requirements of the "Australian Communications and Media Authority (ACMA)".

Ex approval

The measuring device is certified for use in hazardous areas and the relevant safety instructions are provided in the separate "Safety Instructions" (XA) document. Reference is made to this document on the nameplate.

The separate Ex documentation (XA) containing all the relevant explosion protection data is available from your Endress+Hauser sales center.

ATEX, IECEx

Currently, the following versions for use in hazardous areas are available:

Ex d

Category	Type of protection
II2G/Zone 1	Ex d[ia] IIC T6 ... T1
II1/2G/Zone 0/1	Ex d[ia] IIC T6 ... T1

Ex ia

Category	Type of protection
II2G/Zone 1	Ex ia IIC T6 ... T1
II1G/Zone 0	Ex ia IIC T6 ... T1
II1/2G/Zone 0/1	Ex ia IIC T6 ... T1

Ex ic

Category	Type of protection
II3G/Zone 2	Ex ic IIC T6 ... T1
II1/3G/Zone 0/2	Ex ic[ia] IIC T6 ... T1

Ex Ec

Category	Type of protection
II3G/Zone 2	Ex ec IIC T6 ... T1

Ex tb

Category	Type of protection
II2D/Zone 21	Ex tb IIIC Txxx

cCSAus

Currently, the following versions for use in hazardous areas are available:

XP

Category	Type of protection
Class I, II, III, Division 1 for Group A-G	XP (Ex d Flameproof version)

chanhvinh.com

IS

Category	Type of protection
Class I, II, III, Division 1 for Group A-G	IS (Ex i Intrinsically safe version)

NI

Category	Type of protection
Class I, Division 2 for Group ABCD	NI (Non-incendive version), NIFW-Parameter*

*= Entity and NIFW parameters according to control drawings

NEPSI

Currently, the following versions for use in hazardous areas are available:

Ex d

Category	Type of protection
Zone 1	Ex d[ia] IIC T1 ~ T6 Ex d[ia Ga] IIC T1 ~ T6
Zone 0/1	Ex d[ia] IIC T1 ~ T6 DIP A21 Ex d[ia Ga] IIC T1 ~ T6 DIP A21

Ex ia

Category	Type of protection
Zone 1	Ex ia IIC T1 ~ T6
Zone 0/1	Ex ia IIC T1 ~ T6 DIP A21

Ex ic

Category	Type of protection
II3G/Zone 2	Ex ic IIC T1 ~ T6
II1/3G/Zone 0/2	Ex ic[ia Ga] IIC T1 ~ T6

Ex nA

Category	Type of protection
Zone 2	Ex nA IIC T1 ~ T6 Ex nA[ia Ga] IIC T1 ~ T6

INMETRO

Currently, the following versions for use in hazardous areas are available:

Ex d

Category	Type of protection
–	Ex d[ia] IIC T6 ... T1

Ex ia

Category	Type of protection
–	Ex ia IIC T6 ... T1

chanhvinh.com

Ex nA

Category	Type of protection
II3G/Zone 2	Ex nA IIC T6 ... T1

EAC

Ex d

Category	Type of protection
Zone 1	1Ex d [ia Ga] IIC T6 ... T1 Gb
	Ga/Gb Ex d [ia Ga] IIC T6 ... T1

Ex nA

Category	Type of protection
Zone 2	2Ex nA [ia Ga] IIC T6 ... T1 Gc

Functional safety

The measuring device can be used for flow monitoring systems (min., max., range) up to SIL 2 (single-channel architecture; order code for "Additional approval", option LA) and SIL 3 (multichannel architecture with homogeneous redundancy) and is evaluated and certified in accordance with IEC 61508.

The following types of monitoring in safety equipment are possible:

Functional Safety Manual with information on the SIL device → 77

HART certification

HART interface

The measuring device is certified and registered by the FieldComm Group. The measuring system meets all the requirements of the following specifications:
- Certified according to HART
- The device can also be operated with certified devices of other manufacturers (interoperability)

FOUNDATION Fieldbus certification

FOUNDATION Fieldbus interface

The measuring device is certified and registered by the FieldComm Group. The measuring system meets all the requirements of the following specifications:
- Certified in accordance with FOUNDATION Fieldbus H1
- Interoperability Test Kit (ITK), revision version 6.2.0 (certificate available on request)
- Physical Layer Conformance Test
- The device can also be operated with certified devices of other manufacturers (interoperability)

Certification PROFIBUS

PROFIBUS interface

The measuring device is certified and registered by the PNO (PROFIBUS User Organization Organization). The measuring system meets all the requirements of the following specifications:
- Certified in accordance with PROFIBUS PA Profile 3.02
- The device can also be operated with certified devices of other manufacturers (interoperability)

Pressure Equipment Directive

The devices can be ordered with or without a PED approval. If a device with a PED approval is required, this must be explicitly stated in the order.

- With the identification PED/G1/x (x = category) on the sensor nameplate, Endress+Hauser confirms conformity with the "Essential Safety Requirements" specified in Appendix I of the Pressure Equipment Directive 2014/68/EU.
- Devices bearing this marking (PED) are suitable for the following types of medium: Media in Group 1 and 2 with a vapor pressure greater than, or smaller and equal to0.5 bar (7.3 psi)
- Devices not bearing this marking (PED) are designed and manufactured according to good engineering practice. They meet the requirements of Article 4 paragraph 3 of the Pressure Equipment Directive 2014/68/EU. The range of application is indicated in tables 6 to 9 in Annex II of the Pressure Equipment Directive 2014/68/EU.

chanhvinh.com

Experience

The Prowirl 200 measuring system is the official successor to Prowirl 72 and Prowirl 73.

Other standards and guidelines

- EN 60529
  Degrees of protection provided by enclosures (IP code)
- DIN ISO 13359
  Measurement of conductive liquid flow in closed conduits - Flanged-type electromagnetic flowmeters - Overall length
- EN 61010-1
  Safety requirements for electrical equipment for measurement, control and laboratory use - general requirements
- IEC/EN 61326
  Emission in accordance with Class A requirements. Electromagnetic compatibility (EMC requirements).
- NAMUR NE 21
  Electromagnetic compatibility (EMC) of industrial process and laboratory control equipment
- NAMUR NE 32
  Data retention in the event of a power failure in field and control instruments with microprocessors
- NAMUR NE 43
  Standardization of the signal level for the breakdown information of digital transmitters with analog output signal.
- NAMUR NE 53
  Software of field devices and signal-processing devices with digital electronics
- NAMUR NE 105
  Specifications for integrating fieldbus devices in engineering tools for field devices
- NAMUR NE 107
  Self-monitoring and diagnosis of field devices
- NAMUR NE 131
  Requirements for field devices for standard applications

Ordering information

Detailed ordering information is available as follows:

- In the Product Configurator on the Endress+Hauser website: www.endress.com -> Click "Corporate" -> Select your country -> Click "Products" -> Select the product using the filters and search field -> Open product page -> The "Configure" button to the right of the product image opens the Product Configurator.
- From your Endress+Hauser Sales Center:www.addresses.endress.com

Product Configurator - the tool for individual product configuration

- Up-to-the-minute configuration data
- Depending on the device: Direct input of measuring point-specific information such as measuring range or operating language
- Automatic verification of exclusion criteria
- Automatic creation of the order code and its breakdown in PDF or Excel output format
- Ability to order directly in the Endress+Hauser Online Shop

Product generation index

Release date	Product root	On change
01.09.2013	7D2B	TI01083D
01.11.2017	7D2C	TI01332D

More information is available from your Sales Center or at:
www.service.endress.com → Downloads

Application packages

Many different application packages are available to enhance the functionality of the device. Such packages might be needed to address safety aspects or specific application requirements.

chanhvinh.com

The application packages can be ordered with the device or subsequently from Endress+Hauser. Detailed information on the order code in question is available from your local Endress+Hauser sales center or on the product page of the Endress+Hauser website: www.endress.com.

Detailed information on the application packages:
Special Documentation for the device

Diagnostics functions

Package	Description
Extended HistoROM	Comprises extended functions concerning the event log and the activation of the measured value memory. Event log: Memory volume is extended from 20 message entries (standard version) to up to 100 entries. Data logging (line recorder): ▪ Memory capacity for up to 1000 measured values is activated. ▪ 250 measured values can be output via each of the 4 memory channels. The recording interval can be defined and configured by the user. ▪ Measured value logs can be accessed via the local display or operating tool e.g. FieldCare, DeviceCare or Web server.

Heartbeat Technology

Package	Description
Heartbeat Verification	**Heartbeat Verification** Meets the requirement for traceable verification to DIN ISO 9001:2008 Chapter 7.6 a) "Control of monitoring and measuring equipment". ▪ Functional testing in the installed state without interrupting the process. ▪ Traceable verification results on request, including a report. ▪ Simple testing process via local operation or other operating interfaces. ▪ Clear measuring point assessment (pass/fail) with high test coverage within the framework of manufacturer specifications. ▪ Extension of calibration intervals according to operator's risk assessment.

Accessories

Various accessories, which can be ordered with the device or subsequently from Endress+Hauser, are available for the device. Detailed information on the order code in question is available from your local Endress+Hauser sales center or on the product page of the Endress+Hauser website: www.endress.com.

chanhvinh.com

Device-specific accessories

For the transmitter

Accessories	Description
Prowirl 200 transmitter	Transmitter for replacement or storage. Use the order code to define the following specifications: ▪ Approvals ▪ Output, Input ▪ Display/operation ▪ Housing ▪ Software Installation Instructions EA01056D (Order number: 7X2CXX)

Remote display FHX50	FHX50 housing for accommodating a display module .
	▪ FHX50 housing suitable for:
	  ▪ SD02 display module (push buttons)
	  ▪ SD03 display module (touch control)
	▪ Length of connecting cable: up to max. 60 m (196 ft) (cable lengths available for order: 5 m (16 ft), 10 m (32 ft), 20 m (65 ft), 30 m (98 ft))
	The measuring device can be ordered with the FHX50 housing and a display module. The following options must be selected in the separate order codes:
	▪ Order code for measuring device, feature 030: Option L or M "Prepared for FHX50 display"
	▪ Order code for FHX50 housing, feature 050 (device version): Option A "Prepared for FHX50 display"
	▪ Order code for FHX50 housing, depends on the desired display module in feature 020 (display, operation):
	  ▪ Option C: for an SD02 display module (push buttons)
	  ▪ Option E: for an SD03 display module (touch control)
	The FHX50 housing can also be ordered as a retrofit kit. The measuring device display module is used in the FHX50 housing. The following options must be selected in the order code for the FHX50 housing:
	▪ Feature 050 (measuring device version): option B "Not prepared for FHX50 display"
	▪ Feature 020 (display, operation): option A "None, existing displayed used"
	Special Documentation SD01007F
	(Order number: FHX50)

Overvoltage protection for 2-wire devices	Ideally, the overvoltage protection module should be ordered directly with the device. See product structure, feature 610 "Accessory mounted", option NA "Overvoltage protection". Separate order necessary only if retrofitting. ▪ OVP10: For 1-channel devices (feature 020, option A): ▪ OVP20: For 2-channel devices (feature 020, options B, C, E or G) Special Documentation SD01090F (Order number OVP10: 71128617) (Order number OVP20: 71128619)
Protective cover	Is used to protect the measuring device from the effects of the weather: e.g. rainwater, excess heating from direct sunlight or extreme cold in winter. Special Documentation SD00333F (Order number: 71162242)

chanhvinh.com

Accessories	Description
Connecting cable for remote version	▪ Connecting cable available in various lengths: ▪ 5 m (16 ft) ▪ 10 m (32 ft) ▪ 20 m (65 ft) ▪ 30 m (98 ft) ▪ Armored cables available on request. Standard length: 5 m (16 ft) Is always supplied if no other cable length has been ordered.
Post mounting kit	Post mounting kit for transmitter. The post mounting kit can only be ordered together with a transmitter. (Order number: DK8WM-B)

For the sensor

Accessories	Description
Mounting kit	Mounting set for disc (wafer version) comprising: ▪ Tie rods ▪ Seals ▪ Nuts ▪ Washers Installation Instructions EA00075D (Order number: DK7D)
Flow conditioner	Is used to shorten the necessary inlet run. (Order number: DK7ST)

Communication-specific accessories

Accessories	Description
Commubox FXA195 HART	For intrinsically safe HART communication with FieldCare via the USB interface. Technical Information TI00404F
Commubox FXA291	Connects Endress+Hauser field devices with a CDI interface (= Endress+Hauser Common Data Interface) and the USB port of a computer or laptop. Technical Information TI405C/07
HART Loop Converter HMX50	Is used to evaluate and convert dynamic HART process variables to analog current signals or limit values. ▪ Technical Information TI00429F ▪ Operating Instructions BA00371F
Wireless HART adapter SWA70	Is used for the wireless connection of field devices. The WirelessHART adapter can be easily integrated into field devices and existing infrastructures, offers data protection and transmission safety and can be operated in parallel with other wireless networks with minimum cabling complexity. Operating Instructions BA00061S
Fieldgate FXA42	Is used to transmit the measured values of connected 4 to 20 mA analog measuring devices, as well as digital measuring devices ▪ Technical Information TI01297S ▪ Operating Instructions BA01778S ▪ Product page: www.endress.com/fxa42

chanhvinh.com

Field Xpert SMT70	The Field Xpert SMT70 tablet PC for device configuration enables mobile plant asset management in hazardous and non-hazardous areas. It is suitable for commissioning and maintenance staff to manage field instruments with a digital communication interface and to record progress. This tablet PC is designed as an all-in-one solution with a preinstalled driver library and is an easy-to-use, touch-sensitive tool which can be used to manage field instruments throughout their entire life cycle. ▪ Technical Information TI01342S ▪ Operating Instructions BA01709S ▪ Product page: www.endress.com/smt70
Field Xpert SMT77	The Field Xpert SMT77 tablet PC for device configuration enables mobile plant asset management in areas categorized as Ex Zone 1. ▪ Technical Information TI01418S ▪ Operating Instructions BA01923S ▪ Product page: www.endress.com/smt77

Service-specific accessories

Accessories	Description
Applicator	Software for selecting and sizing Endress+Hauser measuring devices: ▪ Choice of measuring devices for industrial requirements ▪ Calculation of all the necessary data for identifying the optimum flowmeter: e.g. nominal diameter, pressure loss, flow velocity and accuracy. ▪ Graphic illustration of the calculation results ▪ Determination of the partial order code, administration, documentation and access to all project-related data and parameters over the entire life cycle of a project. Applicator is available: ▪ Via the Internet: https://portal.endress.com/webapp/applicator ▪ As a downloadable DVD for local PC installation.
W@M	W@M Life Cycle Management Improved productivity with information at your fingertips. Data relevant to a plant and its components is generated from the first stages of planning and during the asset's complete life cycle. W@M Life Cycle Management is an open and flexible information platform with online and on-site tools. Instant access for your staff to current, in-depth data shortens your plant's engineering time, speeds up procurement processes and increases plant uptime. Combined with the right services, W@M Life Cycle Management boosts productivity in every phase. For more information, visit www.endress.com/lifecyclemanagement
FieldCare	FDT-based plant asset management tool from Endress+Hauser. It can configure all smart field units in your system and helps you manage them. By using the status information, it is also a simple but effective way of checking their status and condition. Operating Instructions BA00027S and BA00059S
DeviceCare	Tool to connect and configure Endress+Hauser field devices. Innovation brochure IN01047S

chanhvinh.com

System components

Accessories	Description
Memograph M graphic data manager	The Memograph M graphic data manager provides information on all the relevant measured variables. Measured values are recorded correctly, limit values are monitored and measuring points analyzed. The data are stored in the 256 MB internal memory and also on a SD card or USB stick. ▪ Technical Information TI00133R ▪ Operating Instructions BA00247R
RN221N	Active barrier with power supply for safe separation of 4-20 mA standard signal circuits. Offers bidirectional HART transmission. ▪ Technical Information TI00073R ▪ Operating Instructions BA00202R
RNS221	Supply unit for powering two 2-wire measuring devices solely in the non-hazardous area. Bidirectional communication is possible via the HART communication jacks. ▪ Technical Information TI00081R ▪ Brief Operating Instructions KA00110R

Supplementary documentation

For an overview of the scope of the associated Technical Documentation, refer to the following:
- *W@M Device Viewer* (www.endress.com/deviceviewer): Enter the serial number from nameplate
- *Endress+Hauser Operations App*: Enter the serial number from the nameplate or scan the 2D matrix code (QR code) on the nameplate

Standard documentation

Brief Operating Instructions

Brief Operating Instructions for the sensor

Measuring device	Documentation code
Prowirl D 200	KA01322D

Brief Operating Instructions for transmitter

Measuring device	Documentation code		
	HART	FOUNDATION Fieldbus	PROFIBUS PA
Proline 200	KA01326D	KA01327D	KA01328D

Operating Instructions

Measuring device	Documentation code		
	HART	FOUNDATION Fieldbus	PROFIBUS PA
Prowirl D 200	BA01685D	BA01693D	BA01689D

Description of Device Parameters

Measuring device	Documentation code		
	HART	FOUNDATION Fieldbus	PROFIBUS PA
Prowirl 200	GP01109D	GP01111D	GP01110D

chanhvinh.com

Supplementary device-dependent documentation

Safety instructions

Content	Documentation code
ATEX/IECEx Ex d, Ex tb	XA01635D
ATEX/IECEx Ex ia, Ex tb	XA01636D
ATEX/IECEx Ex ic, Ex ec	XA01637D
$_{C}CSA_{US}$ XP	XA01638D
$_{C}CSA_{US}$ IS	XA01639D
NEPSI Ex d	XA01643D
NEPSI Ex i	XA01644D
NEPSI Ex ic, Ex nA	XA01645D
INMETRO Ex d	XA01642D
INMETRO Ex i	XA01640D
INMETRO Ex nA	XA01641D
EAC Ex d	XA01684D
EAC Ex nA	XA01685D
JPN Ex d	XA01766D

Special documentation

Contents	Documentation code
Information on the Pressure Equipment Directive	SD01614D
Functional Safety Manual	SD02025D

Contents	Documentation code		
	HART	FOUNDATION Fieldbus	PROFIBUS PA
Heartbeat Technology	SD02029D	SD02030D	SD02031D

Installation Instructions

Contents	Comment
Installation instructions for spare part sets and accessories	Documentation code: specified for each individual accessory → 73.

Registered trademarks

HART®
Registered trademark of the FieldComm Group, Austin, Texas, USA

PROFIBUS®
Registered trademark of the PROFIBUS User Organization, Karlsruhe, Germany

FOUNDATION™ Fieldbus
Registration-pending trademark of the FieldComm Group, Austin, Texas, USA

KALREZ®, VITON®
Registered trademarks of DuPont Performance Elastomers L.L.C., Wilmington, DE USA

GYLON®
Registered trademark of Garlock Sealing Technologies, Palmyar, NY, USA

chanhvinh.com

chanhvinh.com

chanhvinh.com

www.addresses.endress.com

Endress+Hauser

People for Process Automation