chanhvinh.com

Level | Pressure | Flow | Temperature | Liquid Analysis | Registration | Systems Components | Services | Solutions

Technical Information

Proline t-mass B 150

Thermal Mass Flow Measuring System
For easy and cost-effective measurement of utility gases



Area of application

- Cost-effective measuring device for different utility gas applications
- System optimization due to targeted monitoring of utility gases
- Leakage detection in gas networks
- Suitable for in-house consumption accountancy

Device properties

- Direct mass flow measurement (kg/h, lbs/h, Scf/min, Nm^3, etc.)
- Selection of gases: air, carbon dioxide, nitrogen and argon
- Nominal diameters: DN 80 to 1500 (3 to 60")
- ¾"- and 1" compression fittings
- Process temperature up to +100 °C (+212 °F)
- Process pressure: 500 mbar a to 20 bar g (7.25 psi a to 290 psi g)
- Calibration accuracy up to 3% o.r. and operable flow range up to 150:1
- 4-20 mA HART, pulse/frequency/status
- cCSAus Cl. 1 Div. 2, CRN
- IP 66/67

Your benefits

The device enables direct measurement of the mass flow of utility gases. Minimum maintenance and negligible pressure loss drive down operating costs.

Sizing – correct product selection
Applicator - the reliable, easy-to-use tool for selecting measuring devices for every application

Installation – simple and efficient
"Hot tap" mounting tool for installation and removal of device under operating conditions

Commissioning – reliable and intuitive
- Intuitive configuration and simple operation
- Preconfigured in accordance with individual requirements

Operation
Multivariable output values measured: mass flow, corrected volume flow, FAD volume flow and temperature

Life Cycle Management (W@M) for your plant

TI01020D/06/EN/02.12
71187194

Endress+Hauser
People for Process Automation

chanhvinh.com

Table of contents

Document information 3
Document conventions 3

Function and system design 4
Measuring principle 4
Measuring system 4

Characteristic values 5
Measured variable 5
Measuring range 5
Operable flow range 7

Output 7
Output signal 7
Signal on alarm 8
Low flow cut off 9
Galvanic isolation 9
Protocol-specific data 9

Power supply 10
Terminal assignment 10
Power consumption 10
Current consumption 11
Power supply failure 11
Electrical connection 11
Potential equalization 12
Terminals 12
Cable entries 12
Cable specification 13

Performance characteristics 13
Reference operating conditions 13
Maximum measured error 13
Repeatability 14
Response time 14
Influence of medium pressure 14

Installation 15
Mounting location 15
Orientation 15
Requirement for pipework 15
Choosing the sensor length 16
Mounting conditions for mounting boss 17
Align the insertion version with the direction of flow. 17
Inlet and outlet runs 17

Environment 18
Ambient temperature range 18
Storage temperature 18
Degree of protection 18
Shock resistance 18
Vibration resistance 19
Electromagnetic compatibility (EMC) 19

Process 19
Medium temperature range 19
Flow limit 19
Pressure loss 19
System pressure 19
Thermal insulation 19

Mechanical construction 20
Design, dimensions 20
Weight 22
Materials 23

Operability 24
Operating concept 24
Local operation 24
Remote operation 25
Languages 26

Certificates and approvals 26
CE mark 26
C-Tick symbol 26
Ex approval 26
Other standards and guidelines 26

Ordering information 27

Application packages 27

Accessories 27
Device-specific accessories 27
Communication-specific accessories 28
Service-specific accessories 28
System components 29

Documentation 29
Standard documentation 29
Supplementary device-dependent documentation 29

Registered trademarks 29

chanhvinh.com

Document information

Document conventions

Electrical symbols

Symbol	Meaning
 A0011197	**Direct current** A terminal to which DC voltage is applied or through which direct current flows.
A0011198	**Alternating current** A terminal to which alternating voltage (sine-wave) is applied or through which alternating current flows.
 A0011200	**Ground connection** A grounded terminal which, as far as the operator is concerned, is grounded via a grounding system.
 A0011199	**Protective ground connection** A terminal which must be connected to ground prior to establishing any other connections.
 A0011201	**Equipotential connection** A connection that has to be connected to the plant grounding system: This may be a potential equalization line or a star grounding system depending on national or company codes of practice.

Tool symbols

Symbol	Meaning
 A0013442	Torx screwdriver
 A0011220	Flat blade screwdriver
 A0011219	Phillips head screwdriver
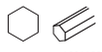 A0011221	Allen key
 A0011222	Hexagon wrench

Symbols for certain types of information

Symbol	Meaning
 A0011182	**Allowed** Indicates procedures, processes or actions that are allowed.
 A0011183	**Preferred** Indicates procedures, processes or actions that are preferred.
 A0011184	**Forbidden** Indicates procedures, processes or actions that are forbidden.
 A0011193	**Tip** Indicates additional information.
 A0011194	**Reference to documentation** Refers to the corresponding device documentation.
 A0011195	**Reference to page** Refers to the corresponding page number.
 A0011196	**Reference to graphic** Refers to the corresponding graphic number and page number.

chanhvinh.com

Symbols in graphics

Symbol	Meaning
1, 2, 3,...	Item numbers
1. , 2. , 3. ...	Series of steps
A, B, C, ...	Views
A-A, B-B, C-C, ...	Sections
 A0013441	Flow direction
 A0011187	**Hazardous area** Indicates a hazardous area.
 A0011188	**Safe area (non-hazardous area)** Indicates a non-hazardous location.

Function and system design

Measuring principle

The thermal measuring principle is based on the cooling of a heated resistance thermometer (PT100), from which heat is extracted by the passing gas. The gas passes two PT100 resistance thermometers in the measurement section. One of these is used in the conventional way as a temperature probe, while the other serves as a heating element. The temperature probe monitors and records the effective process temperature while the heated resistance thermometer is kept at a constant differential temperature (compared to the measured gas temperature) by controlling the electrical current used by the heating element. The greater the mass current passing over the heated resistance thermometer, the greater the extent to which cooling takes place and therefore the stronger the current required to maintain a constant differential temperature. This means that the heat current measured is an indicator of the mass flow rate of the gas.

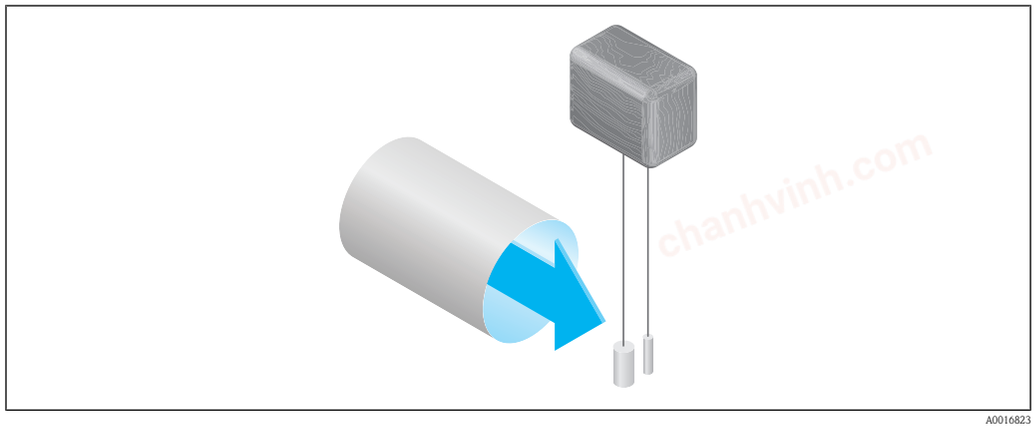

A0016823

Measuring system

The device consists of a transmitter and a sensor.

One device version is available: compact version comprising transmitter and sensor.

Transmitter

t-mass 150 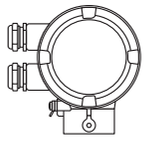 A0015480	Materials: Aluminum coating AlSi10Mg Configuration: ■ Four-line local display with key operation and guided menu ("Setup") for applications ■ Operating tools (e.g. FieldCare) Other special features: May also be ordered without local display

chanhvinh.com

Sensor

t-mass B	
 A0015601	■ Insertion version ■ Nominal diameter range: DN 80 to 1500 (3 to 60") ■ Sensor lengths: 235 mm (9.25 in), 335 mm (13.2 in), 435 mm (17.1 in), 608 mm (24.0 in) ■ Transducer: Stainless steel 1.4404/1.4435/316L

Characteristic values

Measured variable

Direct measured variables

- Mass flow
- Gas temperature

Calculated measured variables

- Corrected volume flow
- FAD (free air delivery) volume flow

Measuring range

The available measuring range depends on the choice of gas and the size of the pipe. The measuring device is calibrated individually with air (under ambient conditions) and the value is converted in order to adapt it to the customer's gas if necessary.

To obtain information on other gases and process conditions, please contact your Endress+Hauser sales office.

To calculate the measuring range, use the *Applicator* sizing tool (→ 28)

The following tables list the ranges available for air.

Measuring range "Calibration flow", option G and H (→ 13)

SI units for insertion version

DN	[kg/h]		[Nm³/h] at 0 °C (1.013 bar a)		[Nm³/h at 15 °C (1.013 bar a)	
[mm]	min.	Max.	min.	Max.	min.	Max.
80	20	2030	16	1570	17	1660
100	38	3750	29	2900	31	3070
150	75	7500	58	5800	61	6130
200	125	12500	97	9700	102	10200
250	200	20000	155	15500	164	16400
300	280	28000	217	21700	229	22900
400	500	50000	387	38700	409	40900
500	800	80000	620	62000	655	65500
600	1150	115000	890	89000	941	94100
700	1590	159000	1230	123000	1300	130000
1000	3200	320000	2480	248000	2620	262000
1500	7200	720000	5568	556800	5886	588600

chanhvinh.com

US units for insertion version

DN	[lb/h]		[Scf/min] at 32 °F (14.7 psi a)		[Scf/min] at 59 °F (14.7 psi a)	
[in]	min.	Max.	min.	Max.	min.	Max.
3	45	4476	9	924	10	977
4	83	8269	17	1710	18	1810
6	165	16540	34	3420	36	3610
8	276	27560	57	5680	60	6000
10	441	44100	91	9130	97	9650
12	617	61740	128	12800	135	13500
16	1103	110300	228	22800	241	24100
20	1764	176400	365	36500	386	38600
24	2536	253600	524	52400	554	55400
28	3506	350600	724	72400	765	76500
40	7056	705600	1460	146000	1542	154200
60	15876	1587600	3280	328000	3465	346500

Measuring range "Calibration flow" option K (→ 🖹 13)

SI units for insertion version

DN	[kg/h]		[Nm³/h] at 0 °C (1.013 bar a)		[Nm³/h at 15 °C (1.013 bar a)	
[mm]	min.	Max.	min.	Max.	min.	Max.
80	20	3045	16	2355	17	2490
100	38	5625	29	4350	31	4605
150	75	11250	58	8700	61	9195
200	125	18750	97	14550	102	15300
250	200	30000	155	23250	164	24600
300	280	42000	217	32550	229	34350
400	500	75000	387	58050	409	61350
500	800	120000	620	93000	655	98250
600	1150	172500	890	133500	941	141150
700	1590	238500	1230	184500	1300	195000
1000	3200	480000	2480	372000	2620	393000
1500	7200	1080000	5568	835200	5886	882900

US units for insertion version

DN	[lb/h]		[Scf/min] at 32 °F (14.7 psi a)		[Scf/min] at 59 °F (14.7 psi a)	
[in]	min.	Max.	min.	Max.	min.	Max.
3	45	6714	9	1386	10	1466
4	83	12403.5	17	2565	18	2715
6	165	24807	34	5130	36	5415
8	276	41344.5	57	8520	60	9000
10	441	66150	91	13695	97	14475
12	617	92610	128	19200	135	20250
16	1103	165375	228	34200	241	36150

chanhvinh.com

DN	[lb/h]		[Scf/min] at 32 °F (14.7 psi a)		[Scf/min] at 59 °F (14.7 psi a)	
[in]	min.	Max.	min.	Max.	min.	Max.
20	1 764	264 600	365	54 750	386	57 900
24	2 536	380 362.5	524	78 600	554	81 300
28	3 506	525 892.5	724	108 600	765	114 750
40	7 056	1 058 400	1 460	219 000	1 542	231 300
60	15 876	2 381 400	3 280	492 000	3 465	519 750

Operable flow range

Over 100:1 (over 150:1 for calibration option code K).

Even in the extended measuring range (above the calibrated end value), the flow rate is captured and provided as an output signal. However, the extended range is not subject to the specified measuring uncertainty.

Output

Output signal

Current output

Current output	4-20 mA HART, active
Maximum output values	▪ DC 24 V (no flow) ▪ 22 mA If the option **Defined value** is selected in the **Failure mode** parameter : 22.5 mA
Load	0 to 750 Ω
Resolution	16 Bit or 0.38 µA
Damping	Adjustable: 0 to 999 s
Assignable measured variables	▪ Mass flow ▪ Corrected volume flow ▪ FAD volume flow ▪ Temperature

Pulse/frequency/switch output

Function	Can be set to pulse, frequency or switching output
Version	Passive, open collector
Maximum input values	▪ DC 30 V ▪ 25 mA
Voltage drop	For 25 mA: ≤ DC 2 V
Pulse output	
Pulse width	Adjustable: 0.5 to 2 000 ms → pulse rate: 0 to 1 000 Pulse/s
Pulse value	Adjustable
Assignable measured variables	▪ Mass flow ▪ Corrected volume flow ▪ FAD volume flow
Frequency output	
Maximum frequency	Adjustable: 0 to 1 000 Hz
Damping	Adjustable: 0 to 999 s
Pulse/pause ratio	1:1

chanhvinh.com

Assignable measured variables	■ Mass flow ■ Corrected volume flow ■ FAD volume flow ■ Temperature
Switching output	
Switching behavior	Binary, conductive or non-conductive
Switching delay	Adjustable: 0 to 100 s
Number of switching cycles	Unlimited
Assignable functions	■ Off ■ On ■ Diagnostic behavior ■ Limit value ■ Status

Signal on alarm

Depending on the interface, failure information is displayed as follows:

Current output

Failure mode	Can be selected (as per NAMUR recommendation NE 43)
Minimum alarm	3.6 mA
Maximum alarm	22 mA
Adjustable value	3.59 to 22.5 mA

Pulse/frequency/switch output

Pulse output	
Failure mode	Choose from: ■ Actual value ■ No pulses
Frequency output	
Failure mode	Choose from: ■ Actual value ■ Defined value: 0 to 1250 Hz ■ 0 Hz
Switching output	
Failure mode	Choose from: ■ Current status ■ Open ■ Closed

Local display

Plain text display	With information on cause and corrective action

Status signal as per NAMUR recommendation NE 107

Operating tool

- Via digital communication: HART protocol
- Via service interface

Plain text display	With information on cause and corrective action

chanhvinh.com

Additional information on remote operation(→ 25)

Low flow cut off

The switch point for low flow cut off is programmable.

Galvanic isolation

The following connections are galvanically isolated from each other:
- Outputs
- Voltage supply

Protocol-specific data

HART

Manufacturer ID	0x11
Device type ID	0x66
HART protocol revision	6.0
Device description files (DTM, DD)	Information and files under: www.endress.com
HART load	Min. 250 Ω
Dynamic variables	The measured variables can be freely assigned to the dynamic variables. **Measured variables for PV (primary dynamic variable)** ■ Mass flow ■ Corrected volume flow ■ FAD volume flow ■ Temperature **Measured variables for SV, TV, QV (secondary, tertiary and quaternary dynamic variable)** ■ Mass flow ■ Corrected volume flow ■ FAD volume flow ■ Temperature ■ Totalizer

chanhvinh.com

Power supply

Terminal assignment

Transmitter

Connection version 4-20 mA HART, pulse/frequency/switching output

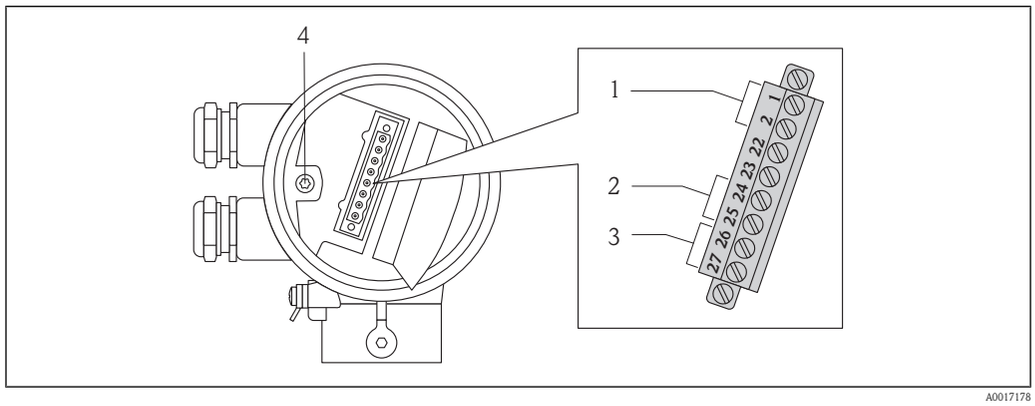

1 Supply voltage
2 Signal transmission: Pulse/frequency/switching output
3 Signal transmission: 4-20 mA HART
4 Ground terminal for cable shield

Supply voltage

Order characteristic for "Power supply"	Terminal numbers	
	1 (L+)	2 (L-)
Option **D**	DC 24 V (18 to 30 V)	

Signal transmission

Order characteristic for "Output"	Terminal numbers			
	Output 1		Output 2	
	26 (+)	27 (-)	24 (+)	25 (-)
Option **A**	4-20 mA HART active		-	
Option **B**	4-20 mA HART active		Pulse/frequency/switch output	
Option **K**	-		Pulse/frequency/switch output	

Supply voltage

DC 24 V (18 to 30 V)

The power supply circuit must comply with SELV/PELV requirements.

Power consumption

Order characteristic for "Output"	Maximum power consumption
■ Option **A**: 4-20mA HART ■ Option **B**: 4-20mA HART, pulse/frequency/switching output ■ Option **K**: Pulse/frequency/switching output	3.1 W

chanhvinh.com

Current consumption

Order characteristic for "Output"	Maximum current consumption	Maximum switch-on current
■ Option **A**: 4-20mA HART ■ Option **B**: 4-20mA HART, pulse/frequency/switching output ■ Option **K**: Pulse/frequency/switching output	185 mA	< 2.5 A

Power supply failure

- Totalizers stop at the last value measured.
- Configuration is retained in the device memory.
- Error messages (incl. total operated hours) are stored.

Electrical connection

Connecting the transmitter

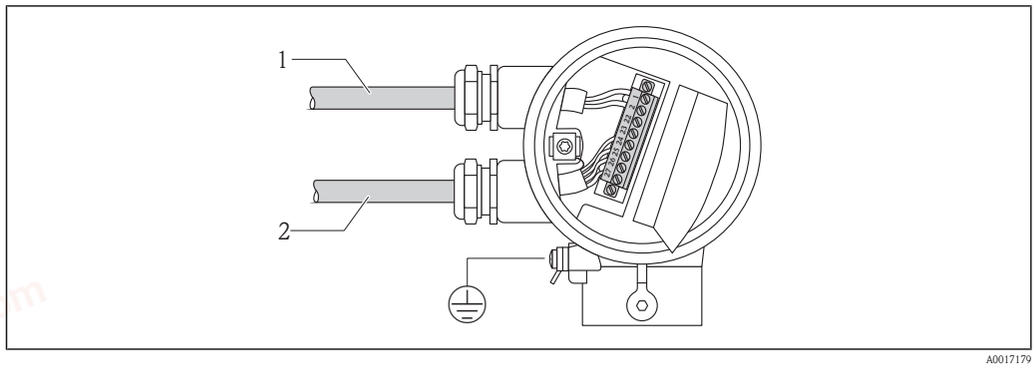

A0017179

1 Cable entry for supply voltage
2 Cable entry for signal transmission

Connection examples

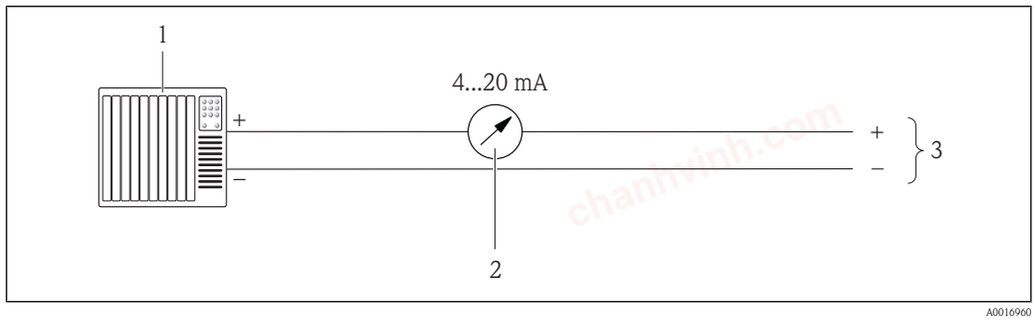

A0016960

1 Connection example for current output, 4-20 mA active

1 Control system (e.g. PLC)
2 Analog display unit: observe maximum load (→ 7)

chanhvinh.com

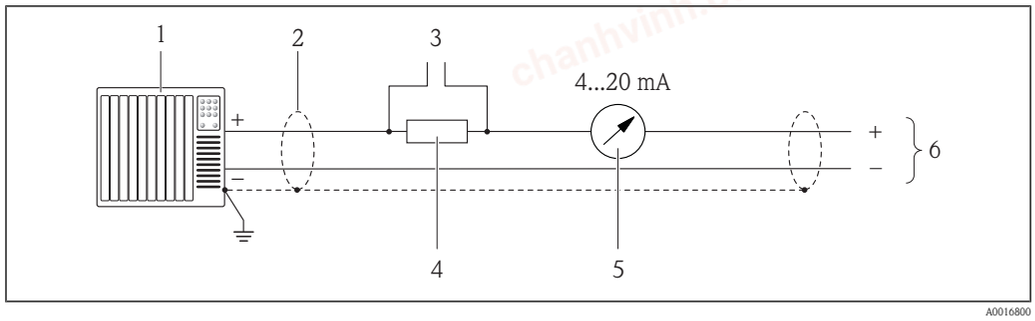

2 Connection example for current output, 4-20 mA HART active

1 Control system (e.g. PLC)
2 Observe cable specification (→ 13)
3 Connection for Field Communicator 375/475 or Commubox FXA191/195
4 Resistor for HART communication (≥ 250 Ω): observe maximum load (→ 7)
5 Analog display unit: observe maximum load (→ 7)

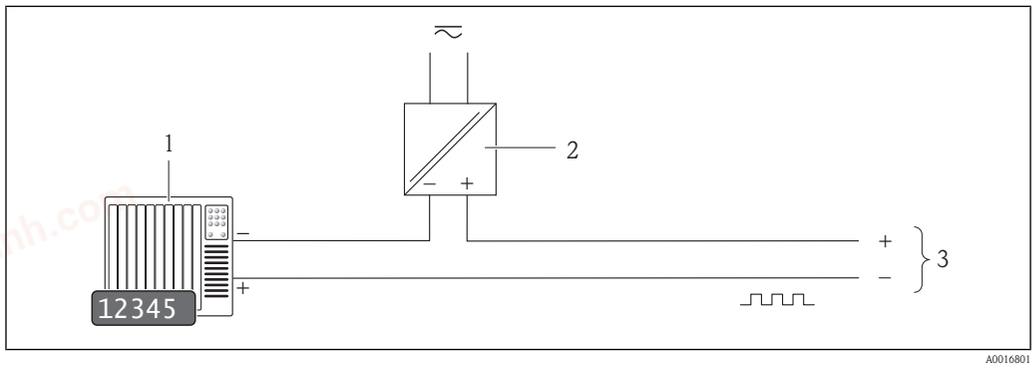

3 Connection example for pulse/frequency output (passive)

1 Automation system with pulse/frequency input (e.g. PLC)
2 Power supply (→ 13)
3 Transmitter: Observe input values (→ 7)

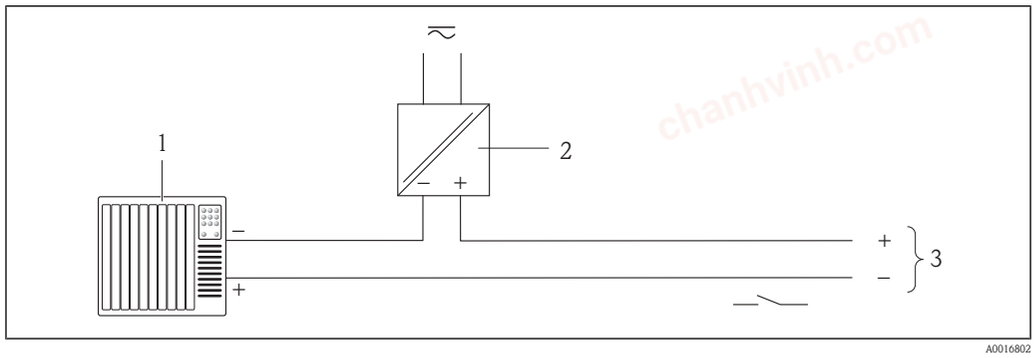

4 Connection example for switching output (passive)

1 Control system with switch input (e.g. PLC)
2 Power supply (→ 13)
3 Transmitter: Observe input values (→ 7)

Potential equalization

No special measures for potential equalization are required.

Terminals

Plug-in screw terminals for specified wire cross-sections

Cable entries

- Cable gland: M20 × 1.5 with cable ∅ 6 to 12 mm (0.24 to 0.47 in)
- Thread for cable entry:
  - NPT ½"
  - G ½"

chanhvinh.com

Cable specification

Wire cross-sectional area

0.5 to 1.5 mm² (21 to 16 AWG)

Permitted temperature range

- –40 °C (–40 °F)...≥ 80 °C (176 °F)
- Minimum requirement: cable temperature range ≥ ambient temperature + 20 K

Signal cable

Current output

For 4-20 mA HART: Shielded cable recommended. Observe grounding concept of the plant.

Pulse/frequency/switch output

Standard installation cable is sufficient.

Supply voltage cable

Standard installation cable is sufficient.

Performance characteristics

Reference operating conditions

- Calibration systems traceable to national standards
- Accredited in accordance with ISO/IEC 17025
- Air controlled to 24 °C ± 0.5 °C (75.2 °F ± 0.9 °F) at atmospheric pressure
- Humidity controlled < 40 % RH

Maximum measured error

o.r. = of reading; o.f.s. = of full scale value

- The full scale value depends upon the nominal diameter of the measuring device and the max. flow of the calibration rig.
- Full scale values of the calibrated measuring range.(→ 5)

chanhvinh.com

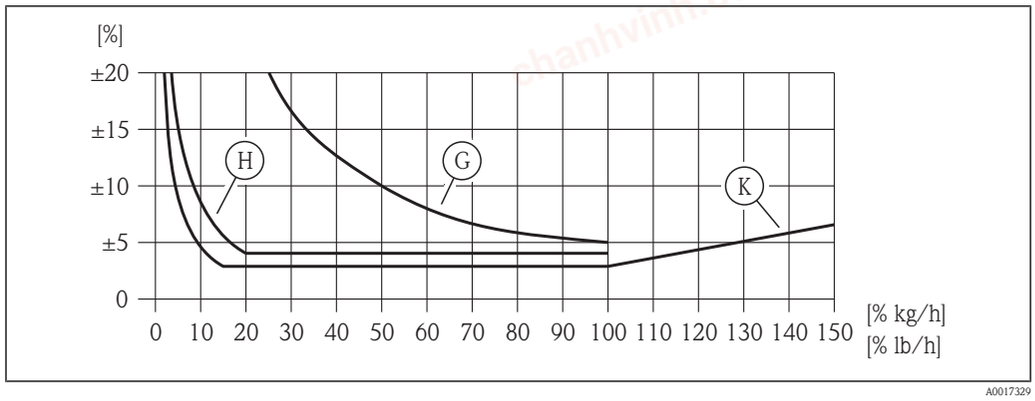

5 *Maximum measured error (% mass flow) as % of measured value/full scale value. G, H, K: Order code options for "Calibration flow", see the following table*

Order code option for "Calibration flow"	Accuracy	Description
K	▪ Q = 100 to 150 %: from ±3 %to ±6.5 % of the current measured value increasing linearly as expressed in the following equation: $\pm 3 \pm (X_n - 100) \times 0.07$[% o.r.] (100 %< $X_n \leq$150 %; X_n = current flow as a % o.f.s.) ▪ Q = 15 to 100 %: ±3 % of current measured value ▪ Q = 1 to 15 % ±0.45 % o.f.s. (all data under reference conditions)	The measuring device is calibrated and adjusted on an accredited and traceable calibration rig . The accuracy is certified with a calibration protocol.
H	▪ Q = 20 to 100 % ±4 % of current measured value ▪ Q = 1 to 20 % ±0.8 % o.f.s. (all data under reference conditions)	The measuring performance of the device is tested, and a verification protocol confirms that the device measures within the specified tolerance.
G	Q = 1 to 100 % ±5 % o.f.s. (under reference conditions)	This version is subject to neither a calibration nor a verification of measuring performance.

Accuracy of outputs

Current output

Accuracy	Max. ±0.05 % o.f.s. or ±10 µA

Repeatability ±0.5 % of value for velocities > 1.0 m/s (3.3 ft/s)

Response time Typically < 3 s for 63 % of a given step change (in both directions)

Influence of medium pressure Air: 0.35 % of value per bar (0.02 % per psi) of process pressure change

chanhvinh.com

Installation

Mounting location

Thermal measuring devices require a fully developed flow profile as a prerequisite for correct flow measurement. For this reason, please pay attention to the following points and document sections when installing the device:

- Avoid flow disturbances, as the thermal measuring principle reacts sensitively to them.
- Take measures to avoid condensation (e.g. condensation trap, thermal insulation etc.).
- For mechanical reasons and to protect the pipe, support is recommended for heavy sensors (e.g. when installing a Hot tap extraction assembly).

Orientation

The direction of the arrow on the sensor helps you to install the sensor according to the flow direction (direction of medium flow through the piping).

	Orientation	Recommendation
Vertical orientation	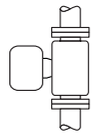 A0017337	✓ 1) 2)
Horizontal orientation, transmitter head up	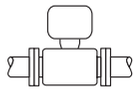 A0015589	✓✓
Horizontal orientation, transmitter head down	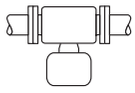 A0015590	✓✓ 3)
Inclined mounting position, transmitter head down	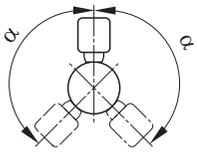 A0015773	✓ 4)

1) In the case of saturated or unclean gases, upward flow in a vertical pipe section is preferred to minimize condensation or contamination.
2) Not recommended in the case of extreme vibrations or unstable installations.
3) Suitable only for clean and dry gases. If buildup or condensate are always present: Mount the sensor in an inclined position.
4) Select inclined mounting position (α = approx. 135°) if the gas is very wet or saturated with water.

Requirement for pipework

The measuring device must be professionally installed, and the following points must be observed:

- Piping must be professionally welded.
- Seals must be sized correctly.
- Flanges and seals must be correctly aligned.
- The internal diameter of the pipe must be known. The maximum permitted deviation from the input value is:
  - 1 mm (0.04 in) at DN < 200 mm (8 in)
  - 3 mm (0.12 in) at DN ≥ 200 mm (8 in)
- Following installation, the pipe must be free from dirt and particles in order to avoid damage to the sensors.

Further information → ISO standard 14511

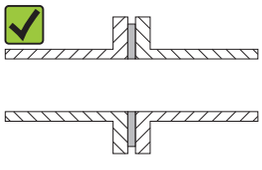

A0005103

Correctly aligned flanges and seals

chanhvinh.com

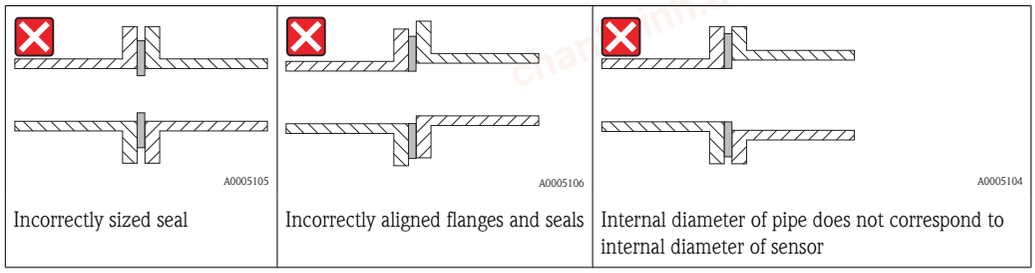

Incorrectly sized seal	Incorrectly aligned flanges and seals	Internal diameter of pipe does not correspond to internal diameter of sensor

Choosing the sensor length

The minimum length of the senor can be calculated using the Endress+Hauser calculation program Applicator (from version 10.00 (→ 28)) or using the following calculation.

The minimum length of the sensor is determined by the required insertion depth. The required insertion depth that is calculated must be within the adjusting range of the selected insertion version.

► Determining the dimensions A, B, C1 and C2

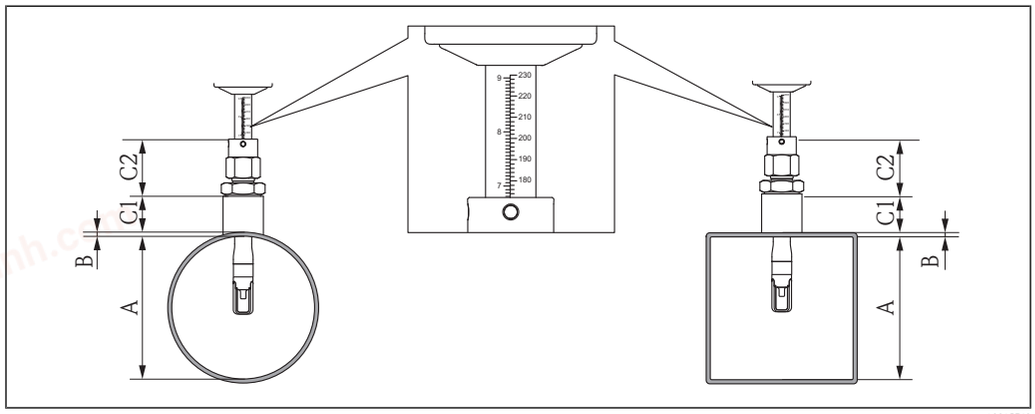

A *Internal pipe diameter DN (circular pipe) or internal dimension (rectangular duct)*
B *Thickness of pipe wall or of duct wall*
C1 *Length of mounting set*
C2 *Length of sensor compression fitting*

Determining C1 and C2 (Endress+Hauser original parts only)

DK6MB-BXA mounting boss G1A	C1 + C2 = 99 mm (3.90 in)
DK6MB-DXA mounting boss G3/4A	C1 + C2 = 99 mm (3.90 in)
DK6MB-AXA mounting boss 1" NPT	C1 + C2 = 107 mm (4.21 in)
DK6MB-CXA mounting boss 3/4" NPT	C1 + C2 = 102 mm (4.02 in)

Determining C1 and C2 (not limited to Endress+Hauser original parts)

C1	Length of pipe connection used
C2 (compression fitting with G1A thread)	39 mm (1.54 in)
C2 (compression fitting with G3/4A thread)	39 mm (1.54 in)
C2 (compression fitting with 1" NPT thread)	47 mm (1.85 in)
C2 (compression fitting with 3/4" NPT thread)	42 mm (1.65 in)

► Calculating insertion depth

$(0.3 \cdot A) + B + (C1 + C2)$

► Choosing the length of the insertion version

chanhvinh.com

Using the insertion depth calculated in this way, the length of the insertion version can be selected with the help of the following table.

The calculated insertion depth must be within the adjusting range of the insertion version!

Length of insertion tube		Adjusting range (insertion depth)			
		GA thread		NPT thread	
mm	in	mm	in	mm	in
235	9	120 to 230	4.7 to 9.0	126 to 230	4.96 to 9.0
335	13	120 to 330	4.7 to 13.0	126 to 330	4.96 to 13.0
435	17	120 to 430	4.7 to 17.0	126 to 430	4.96 to 17.0
608	24	120 to 604	4.7 to 23.8	126 to 604	4.96 to 23.8

Mounting conditions for mounting boss

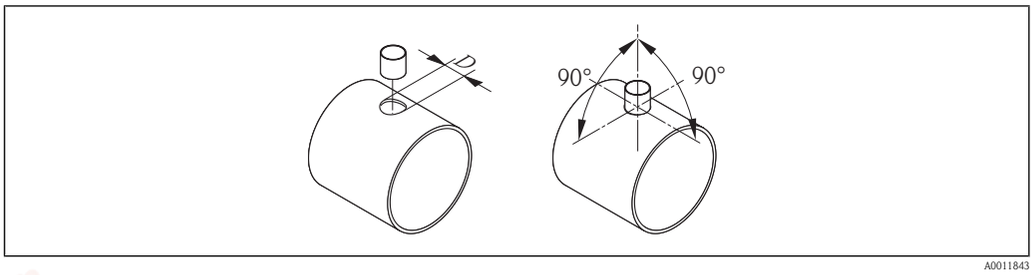

A0011843

D = 31.0 mm ± 0.05 mm (1.22 in ± 0.02 in)

▶ When installing in rectangular ducts with thin walls:
✔ Use suitable support brackets.

Align the insertion version with the direction of flow.

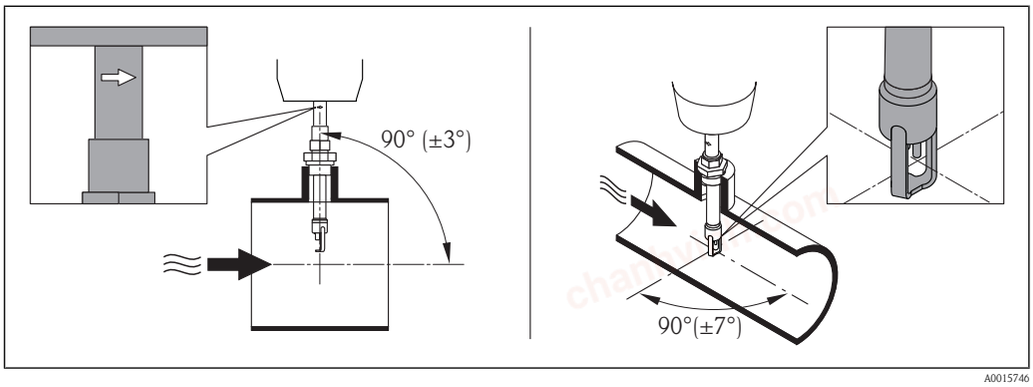

A0015746

Check and ensure that the sensor on the pipe/duct is aligned at a 90° angle to the direction of flow. Rotate the sensor so that the arrow marking on the sensor body corresponds to the direction of flow. The line marking on the body used to adjust the insertion depth must be aligned with the direction of flow.

Inlet and outlet runs

The thermal measuring principle is sensitive to disturbed flow conditions.

- As a general rule, the measuring device should always be installed as far away as possible from any flow disturbances. For further information, please refer to → ISO 14511.
- If possible, the sensor should be installed upstream from valves, T-pieces, elbows etc. To attain the specified level of accuracy of the measuring device, the below mentioned inlet and outlet runs must be maintained at minimum. If there are several flow disturbances present, the longest specified inlet run must be maintained.

chanhvinh.com

Recommended inlet and outlet runs

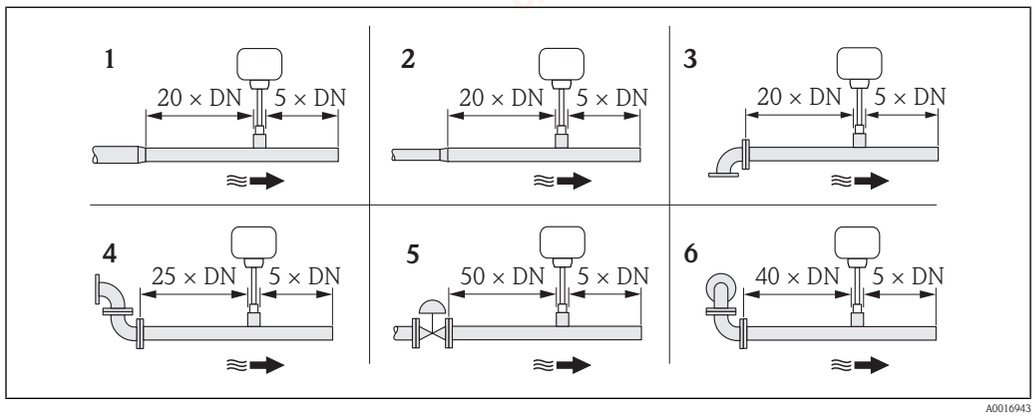

1 reduction
2 expansion
3 90° elbow or T-piece
4 2 × 90° elbow
5 Control valve
6 2 × 90° elbow (3-dimensional)

Outlet run for pressure or temperature transmitter

If a pressure or temperature measuring device is installed downstream of the measuring device, make sure there is sufficient distance between the two devices.

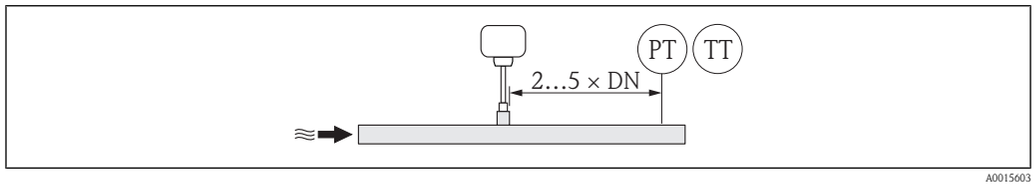

PT Pressure measuring device
TT Temperature measuring device

Environment

Ambient temperature range

Measuring device	–40 to +60 °C (–40 to +140 °F)
Local display	–20 to +60 °C (–4 to +140 °F), the readability of the display may be impaired at temperatures outside the temperature range.

► If operating outdoors:
Avoid direct sunlight, particularly in warm climatic regions.

Storage temperature

–40 to +80 °C (–40 to +176 °F), preferably at +20 °C (+68 °F)

Degree of protection

Transmitter
- As standard: IP66/67, type 4X enclosure
- When housing is open: IP20, type 1 enclosure
- Display module: IP20, type 1 enclosure

Sensor
IP66/67, type 4X enclosure

Shock resistance

As per IEC/EN 60068-2-31

chanhvinh.com

Vibration resistance	Acceleration up to 2 g, 10 to 150 Hz, as per IEC/EN 60068-2-6
Electromagnetic compatibility (EMC)	As per IEC/EN 61326 and NAMUR Recommendation 21 (NE 21). Details are provided in the Declaration of Conformity.

Process

Medium temperature range	**Sensor** –40 to +100 °C (–40 to +212 °F) **Seals (G thread only)** ■ HNBR: –40 to +100 °C (–40 to +212 °F) ■ EPDM: –35 to +100 °C (–31 to +212 °F) **Clamping ring** PEEK: –40 to +100 °C (–40 to +212 °F)
Flow limit	See "Measuring range"(→ 5) section The velocity in the measuring tube should not exceed 70 m/s (230 ft/s).
Pressure loss	Negligible. For a precise calculation, use the Applicator.
System pressure	**Sensor** Depending on the version, please note the details on the name plate . Max. 20 bar g (290 psi g)
Thermal insulation	If the gas is very humid or saturated with water, the pipe and the sensor housing should be insulated to prevent water droplets condensing on the transducer.

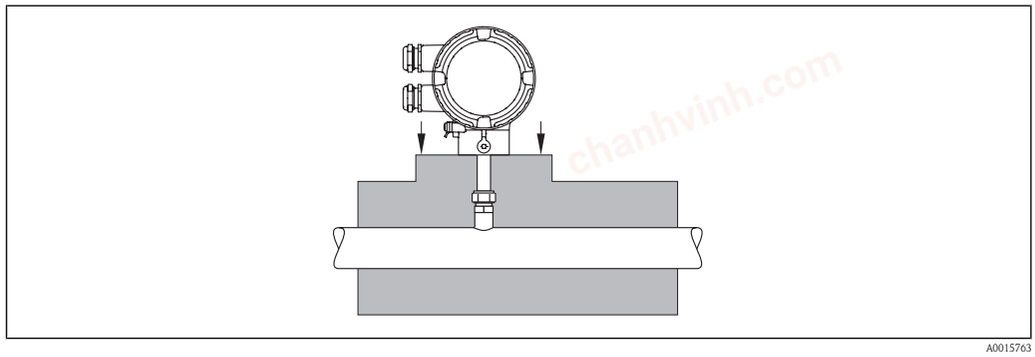

A0015763

chanhvinh.com

Mechanical construction

Design, dimensions

Compact version

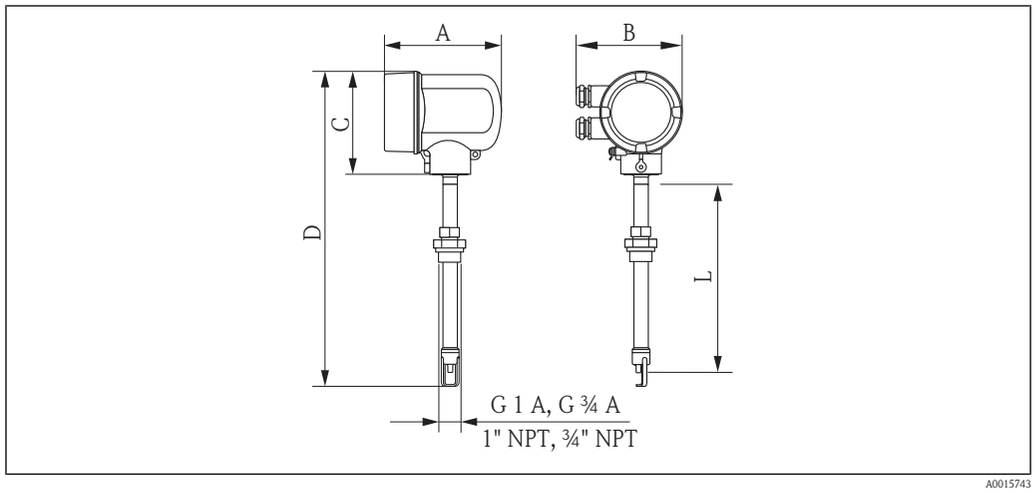

A0015743

Dimensions in SI units

L [mm]	A [1] [mm]	B [mm]	C [mm]	D [mm]
235	146	133	129	407
335	146	133	129	507
435	146	133	129	597.4
608	146	133	129	770.4

1) For version without local display values - 7 mm

Dimensions in US units

L [in]	A [1] [in]	B [in]	C [in]	D [in]
9	5.75	5.24	5.08	16.02
13	5.75	5.24	5.08	19.96
17	5.75	5.24	5.08	23.52
24	5.75	5.24	5.08	30.33

1) For version without local display values - 0.28 in

chanhvinh.com

Hot tap

Low pressure version (up to 4.5 bar g (65 psi g))

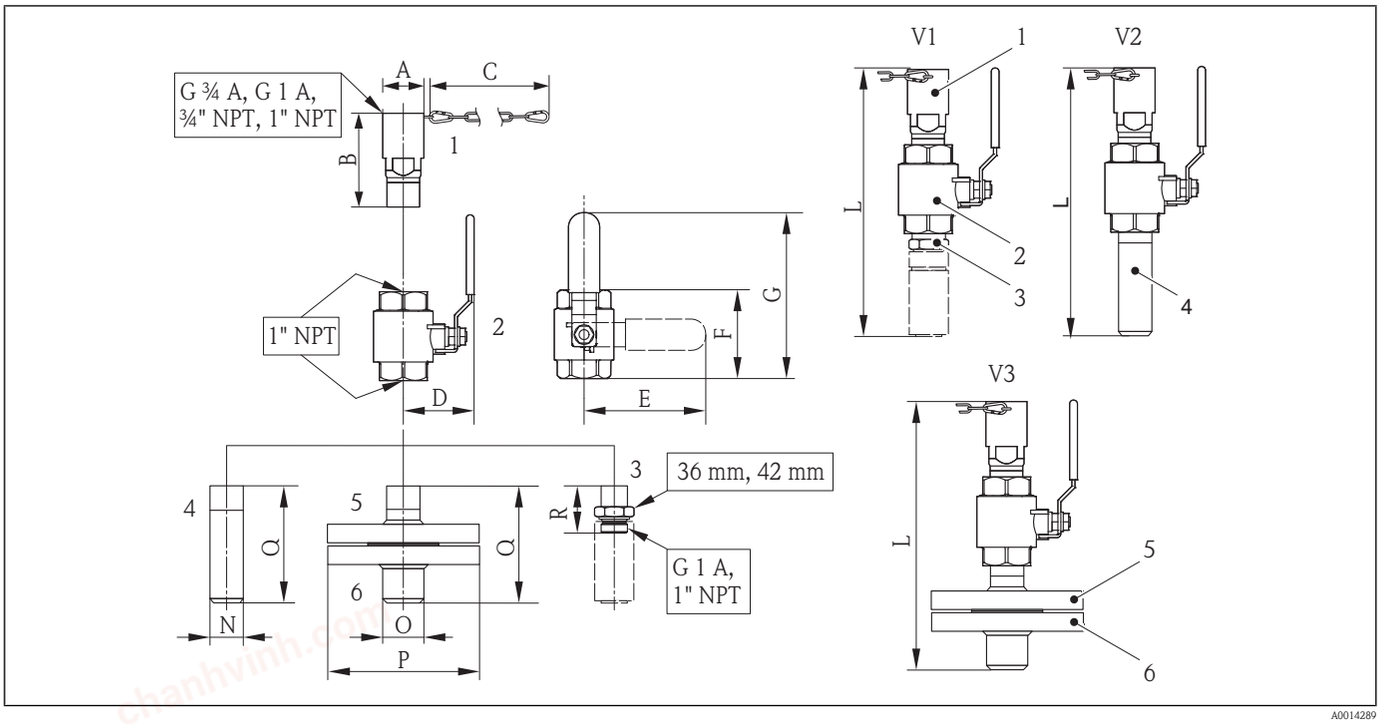

1 Sensor connection with safety chain
2 Ball valve
3 Retrofit adapter
4 Process connection weld-in nipple
5 Flange adapter
6 Process connection flange
V1 Version with retrofit adapter
V2 Version with weld-in nipple
V3 Version with flange

	A	B	C	D	E	F	G	L	N	O	P	Q	R
mm	42.4	96	620	71	165	88	209	~249.5	33.4	33.4	123.9	105.5	61
inch	1.67	3.78	24.4	2.80	3.78	2.80	6.50	~3.46	1.31	1.31	4.88	4.15	2.40

chanhvinh.com

Medium pressure version (up to 16 bar g (230 psi g)

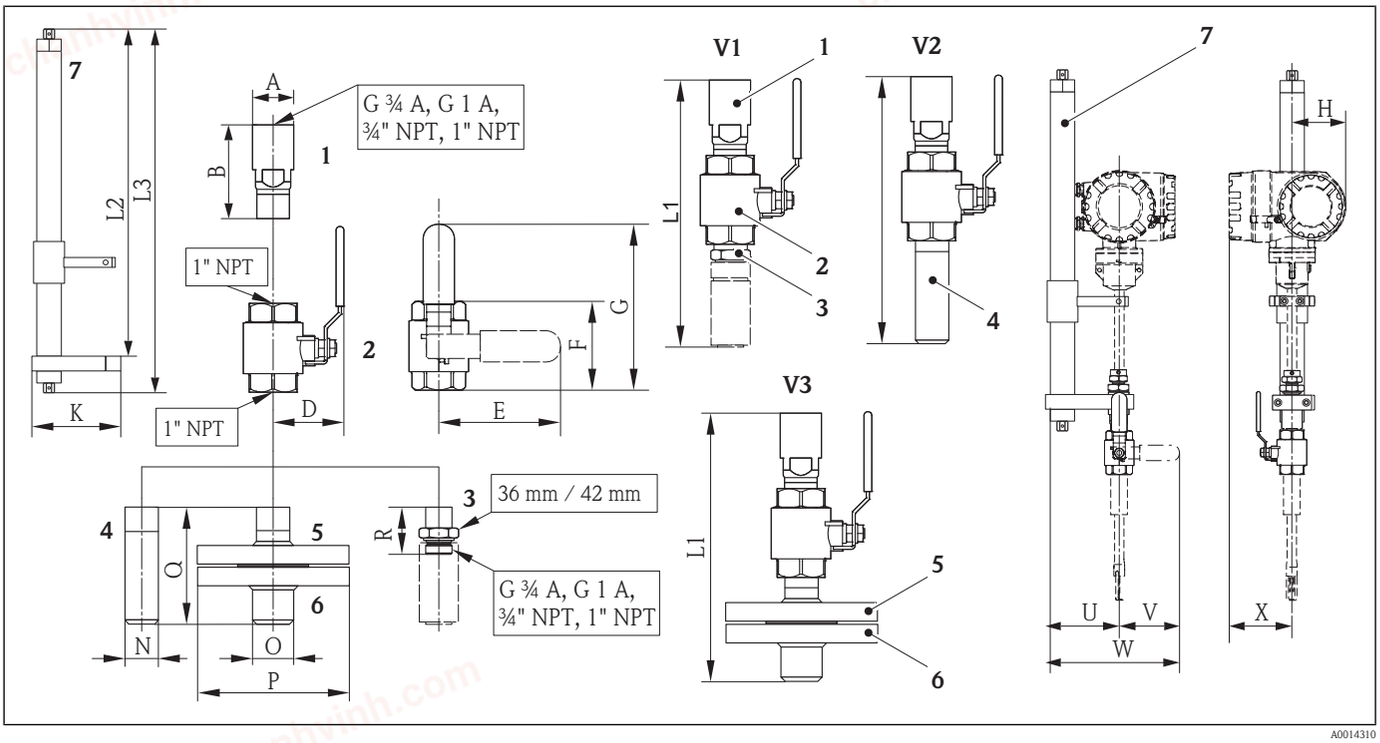

1 Sensor connection
2 Ball valve
3 Retrofit adapter
4 Process connection weld-in nipple
5 Flange adapter
6 Process connection flange
7 Extractor assembly
V1 Version with retrofit adapter
V2 Version with weld-in nipple
V3 Version with flange

	A	B	D	E	F	G	L1	L2	L3	N	O	P	Q	R	U	V	W	x
mm	42.4	96	71	165	88	209	~249.5	133	148	33.4	33.4	123.9	105.5	61	150	165	215	129
inch	1.67	3.78	2.80	3.78	2.80	6.50	~9.82	5.24	5.83	1.31	1.31	4.88	4.15	2.40	5.91	6.50	8.46	5.08

Weight

Weight in SI units

Compact version

Sensor length [mm]	235	335	435	608
Weight [kg] [1)]	2.2	2.3	2.4	2.5

1) Weight of entire measuring device

Hot tap

Hot tap versions	[kg]
with retrofit adapter (version V1)	1.8
with weld-in nipple (version V2)	2.2
with flange/flange adapter (version V3)	4.3
Extractor assembly	7.8

chanhvinh.com

Weight in US units

Compact version

Sensor length [in]	9	13	17	24
Weight [lbs]	4.8	5.7	5.3	5.5

Hot tap

Hot tap versions	[lbs]
with retrofit adapter (version V1)	4.0
with weld-in nipple (version V2)	4.9
with flange/flange adapter (version V3)	9.5
Extractor assembly	17.5

Materials

Transmitter housing

- Order characteristic for "Housing", option **A**: aluminum coating AlSi10Mg
- Window material: glass

Sensor

Compression fitting:

- Thread: G ¾ A, G 1 A, ¾" NPT, 1" NPT
- Stainless steel 1.4404/1.4571 and 316L/316TI
- Clamping ring: PEEK 450G
- Sealing ring: EPDM/HNBR, 316/316L (outer ring)

Transducer

- Stainless steel 1.4404/1.4435 as per EN 10216-5/ EN 10272-5/ EN 10028-7/ EN 10088-2
- Stainless steel 316L as per ASTM A269/ A479/ A240/ A666

Cable entries

Order characteristic for "Housing", option A: compact, aluminum coating

Electrical connection	Type of protection	Material
Cable gland M20 × 1.5	For non-hazardous areas	Plastic
Thread G ½" via adapter	For non-Ex and Ex	Nickel-plated brass
Thread NPT ½" via adapter		

Accessories

Mounting boss

1.4404 as per EN 10272 and 316/316L as per ASTM A479

chanhvinh.com

Hot tap

- Process connection:
  - Weld-in nipple:
    1.4404 as per EN 10272 and 316/316L as per ASTM A479
  - Flange/flange Adapter:
    1.4404 as per EN 1092-1, 316L as per JIS B 2220, ASME B16.5
- Sensor connection:
  1.4404 as per EN 10216-5 and 316/316L as per ASTM A312
- Ball valve:
  CF3M and CF8M
  Seal:
  PTFE

Operability

Operating concept

Operator-oriented menu structure for user-specific tasks
- Commissioning
- Operation
- Diagnostics
- Expert level

Quick and safe commissioning
Menu guidance with brief explanations of the individual parameter functions

Reliable operation
- Operation in different languages: (→ 26)
  - Via local display
  - Via operating tools
- Uniform operating philosophy applied to device and operating tools

Efficient diagnostics increase measurement reliability
- Remedial information is integrated in plain text
- Diverse simulation options and optional line recorder functions

Local operation

"Display; Operation" Order code option C

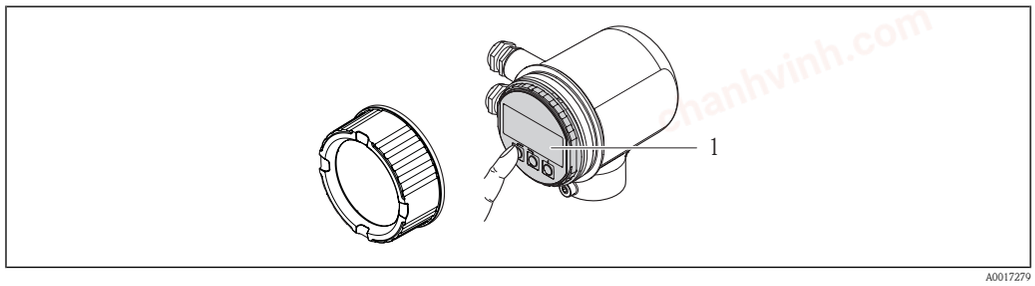

A0017279

1 Display module (pushbutton operation)

Display elements

- 4-line display
- Format for displaying measured variables and status variables can be individually configured
- Permitted ambient temperature for the display: –20 to +60 °C (–4 to +140 °F)
  The readability of the display may be impaired at temperatures outside the temperature range.

Operating elements

Local operation with 3 push buttons (⊕, ⊖, Ⓔ)

chanhvinh.com

Additional functionality

- Data backup function
  The device configuration can be saved in the display module.
- Data comparison function
  The device configuration saved in the display module can be compared to the current device configuration.
- Data transfer function
  The transmitter configuration can be transmitted to another device using the display module.

Remote operation

Via HART protocol

This communication interface is present in the following device version:
- Order characteristic for "Outlet", option **A**: 4-20 mA HART
- Order characteristic for "Outlet", option **B**: 4-20 mA HART, pulse/frequency/switching output

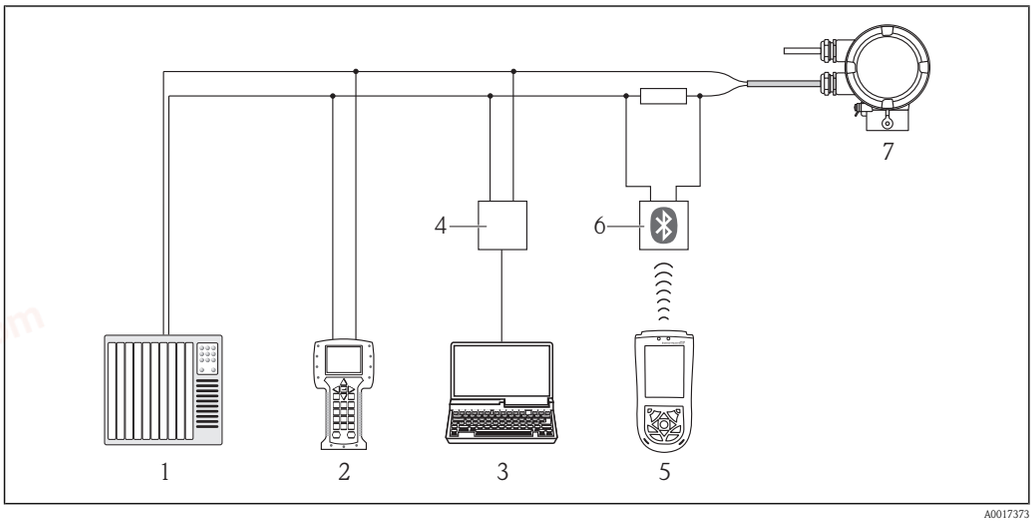

A0017373

6 *Options for remote operation via HART protocol*

1 Control system (e.g. PLC)
2 Field Communicator 475
3 Computer with operating tool (e.g. FieldCare, AMS Device Manager, SIMATIC PDM)
4 Commubox FXA195 (USB)
5 Field Xpert SFX100
6 VIATOR Bluetooth modem with connecting cable
7 Transmitter

chanhvinh.com

Via service interface (CDI)

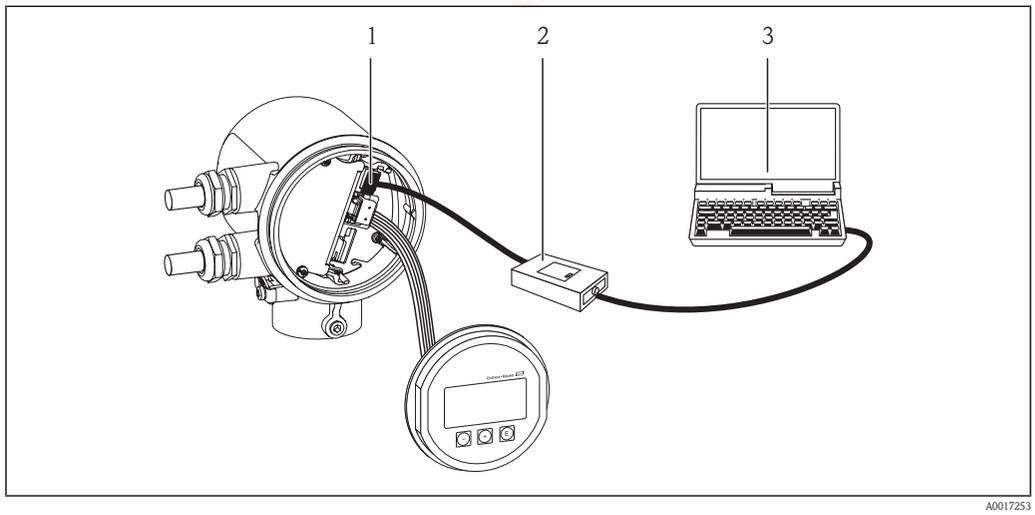

A0017253

1 Service interface (CDI) of the measuring device
2 Commubox FXA291
3 Computer with "FieldCare" operating tool

Languages

Can be operated in the following languages:
- Via local display:
  English, German, French, Spanish, Italian, Dutch, Portuguese, Polish, Russian, Turkish, Japanese, Chinese, Korean, Bahasa (Indonesian), Vietnamese, Czech
- Via operating tools:
  English, German, French, Spanish, Italian, Dutch, Portuguese, Polish, Russian, Turkish, Japanese, Chinese, Korean, Bahasa (Indonesian), Vietnamese, Czech

Certificates and approvals

CE mark

The measuring system is in conformity with the statutory requirements of the applicable EC Directives. These are listed in the corresponding EC Declaration of Conformity along with the standards applied.

Endress+Hauser confirms successful testing of the device by affixing to it the CE mark.

C-Tick symbol

The measuring system meets the EMC requirements of the "Australian Communications and Media Authority (ACMA)".

Ex approval

$_{C}CSA_{US}$

The following hazardous area versions currently available:

NI
Class 1, Division 2, Groups A, B, C and D T4 or Class I, Zone 2 IIC T4

Other standards and guidelines

- EN 60529
  Degrees of protection provided by enclosures (IP code)
- EN 61010-1
  Protection Measures for Electrical Equipment for Measurement, Control, Regulation and Laboratory Procedures.
- IEC/EN 61326
  Emission in accordance with Class A requirements. Electromagnetic compatibility (EMC requirements)
- NAMUR NE 21
  Electromagnetic compatibility (EMC) of industrial process and laboratory control equipment.
- NAMUR NE 32
  Data retention in the event of a power failure in field and control instruments with microprocessors

chanhvinh.com

- NAMUR NE 43
  Standardization of the signal level for the breakdown information of digital transmitters with analog output signal.
- NAMUR NE 53
  Software of field devices and signal-processing devices with digital electronics
- NAMUR NE 105
  Specifications for integrating fieldbus devices in engineering tools for field devices
- NAMUR NE 107
  Status classification as per NE107

Ordering information

Your Endress+Hauser sales center can provide detailed ordering information and information on the extended order code.

Application packages

Package	Description
HistoROM extended function	Comprises extended functions concerning the event log and the activation of the measured value memory. Event log: ■ Memory volume is extended from 20 message entries (basic version) to up to 100 entries. ■ Message entries are visualized via the local display or FieldCare. Data logging (line recorder): ■ Memory capacity for up to 1000 measured values is activated. ■ 250 measured values can be output via each of the 4 memory channels. The recording interval can be defined and configured by the user. ■ Data logging is visualized via the local display or FieldCare.

Accessories

Device-specific accessories

For the sensor

Accessories	Description
Mounting boss	Mounting boss for t-mass insertion version. Order code DK6MB-*
Hot tap	If the accessory is ordered as an extended option, only one particular set of standard features is available. **Low pressure, order characteristic for "Accessories Enclosed", options PG, PH, PK, PL** Mounting set contains welded socket (process connection), sensor connection with safety chain and ball valve. To insert/remove the sensor at process pressures up to max. 4.5 barg (65 psi). **High pressure, order characteristic for "Accessories Enclosed", options PI, PJ, PM, PN** Mounting set contains welded socket (process connection), sensor connection, ball valve and extractor assembly. To insert/remove the sensor at process pressures up to max. 16 barg (235 psi). For details, see Installation Instructions EA00109D If the accessory is ordered separately, individual combinations can be selected. Order code DK6HT-*

chanhvinh.com

Communication-specific accessories

Accessories	Description
Commubox FXA195 HART	For intrinsically safe HART communication with FieldCare via the USB interface. For details, see "Technical Information" TI00404F
HART Loop Converter HMX50	Is used to evaluate and convert dynamic HART process variables to analog current signals or limit values. For details, see "Technical Information" TI00429F and Operating Instructions BA00371F
Wireless HART adapter SWA70	Is used for the wireless connection of field devices. The WirelessHART adapter can be easily integrated into field devices and existing infrastructures, offers data protection and transmission safety and can be operated in parallel with other wireless networks with minimum cabling complexity. For details, see Operating Instructions BA00061S
Fieldgate FXA320	Gateway for the remote monitoring of connected 4-20 mA measuring devices via a Web browser. For details, see "Technical Information" TI00025S and Operating Instructions BA00053S
Fieldgate FXA520	Gateway for the remote diagnostics and remote configuration of connected HART measuring devices via a Web browser. For details, see "Technical Information" TI00025S and Operating Instructions BA00051S
Field Xpert SFX100	Compact, flexible and robust industry handheld terminal for remote configuration and for obtaining measured values via the HART current output (4-20 mA). For details, see Operating Instructions BA00060S
Commubox FXA291	Connects Endress+Hauser field devices with a CDI interface (= Endress+Hauser Common Data Interface) and the USB port of a computer or laptop. For details, see "Technical Information" TI00405C

Service-specific accessories

Accessories	Description
Applicator	Software for selecting and sizing Endress+Hauser measuring devices: ▪ Calculation of all the necessary data for identifying the optimum flowmeter: e.g. nominal diameter, pressure loss, accuracy or process connections. ▪ Graphic illustration of the calculation results Administration, documentation and access to all project-related data and parameters over the entire life cycle of a project. Applicator is available: ▪ Via the Internet: https://wapps.endress.com/applicator ▪ On CD-ROM for local PC installation.
W@M	Life cycle management for your plant W@M supports you with a wide range of software applications over the entire process: from planning and procurement, to the installation, commissioning and operation of the measuring devices. All the relevant device information, such as the device status, spare parts and device-specific documentation, is available for every device over the entire life cycle. The application already contains the data of your Endress+Hauser device. Endress+Hauser also takes care of maintaining and updating the data records. W@M is available: ▪ Via the Internet: www.endress.com/lifecyclemanagement ▪ On CD-ROM for local PC installation.

chanhvinh.com

FieldCare	FDT-based plant asset management tool from Endress+Hauser. It can configure all smart field units in your system and helps you manage them. By using the status information, it is also a simple but effective way of checking their status and condition. For details, see Operating Instructions BA00027S and BA00059S

System components

Accessories	Description
Memograph M graphic display recorder	The Memograph M graphic data manager provides information on all the relevant measured variables. Measured values are recorded correctly, limit values are monitored and measuring points analyzed. The data are stored in the 256 MB internal memory and also on a SD card or USB stick. For details, see "Technical Information" TI00133R and Operating Instructions BA00247R

Documentation

The following document types are available:
- On the CD-ROM supplied with the device
- In the Download Area of the Endress+Hauser Internet site: www.endress.com → Download

Standard documentation

Device type	Communication	Document type	Documentation code
6BAB**-	----	Brief Operating Instructions	KA01104D
	HART	Operating Instructions	BA01043D

Supplementary device-dependent documentation

Device type	Document type	Approval	Documentation code
6BAB**-	Installation Instructions		Specified for each individual accessory (→ 27)

Registered trademarks

HART®
Registered trademark of the HART Communication Foundation, Austin, USA

Applicator®, FieldCare®, Field Xpert™, HistoROM®
Registered or registration-pending trademarks of the Endress+Hauser Group

chanhvinh.com
chanhvinh.com
chanhvinh.com
chanhvinh.com
chanhvinh.com
chanhvinh.com

chanhvinh.com
chanhvinh.com
chanhvinh.com
chanhvinh.com
chanhvinh.com
chanhvinh.com

chanhvinh.com

Instruments International

Endress+Hauser
Instruments International AG
Kaegenstrasse 2
4153 Reinach
Switzerland

Tel.+41 61 715 81 00
Fax+41 61 715 25 00
www.endress.com
info@ii.endress.com

Endress+Hauser
People for Process Automation

TI01020D/06/EN/02.12
71187194
EH-COSIMA ProMoDo