chanhvinh.com

TCC-AP-AP

Hinged joints with clamps

Technopolymer

CLAMPS
Glass-fibre reinforced polyamide based (PA) technopolymer, RAL 9005 (C9) black colour or grey RAL 7040 (C33) colour, matte finish.

SCREWS AND NUTS (SUPPLIED)
Cylindrical-head screw with hexagon socket in AISI 304 stainless steel with anti-seizure treatment.
Self-locking nuts in AISI 304 stainless steel.

STANDARD EXECUTIONS
- **TCC-AP-AP-T**: with teeth.
- **TCC-AP-AP-S**: without teeth.

FEATURES
Joints comprising clamps with external/internal teeth (36 teeth) have a 10° adjustment angle.
Joints comprising clamps without teeth can be positioned at any angle.
Clamps for tubes with a diameter of 30 ± 0.2 mm.
For smaller diameter tubes, the hole reduction sleeve can be used TCC-A (to be ordered separately).
The "s" grub screws may be replaced by the kit TCC-KS.

TECHNICAL DATA
The resistance values shown in the table were measured during laboratory tests at ambient temperature with the screws tightened to the maximum torque "C#".

ACCESSORIES ON REQUEST (TO BE ORDERED SEPARATELY)
- TCC-A (see page -): reduction sleeves.
- TCC-KS (see page -): clamping kit.
- GN 197 (see page -): monitor mounts.
- TCC-KV (see page -): screws and clamping nuts.
- GN 990 (see page -): connecting tubes.



ELESA Original design

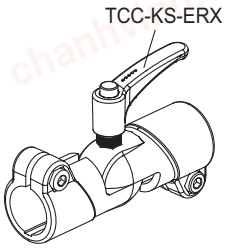

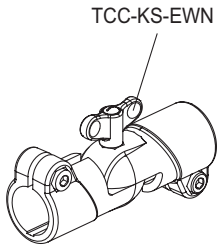

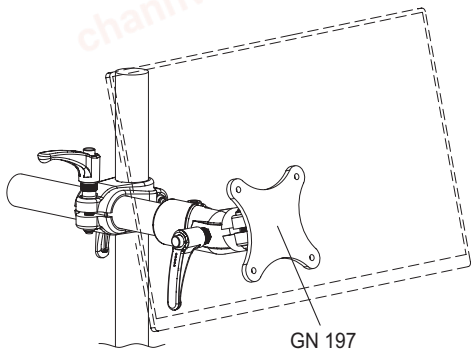

ELESA and GANTER models all rights reserved in accordance with the law.
Always mention the source when reproducing our drawings.

chanhvinh.com

TCC-AP-AP | Hinged joints with clamps

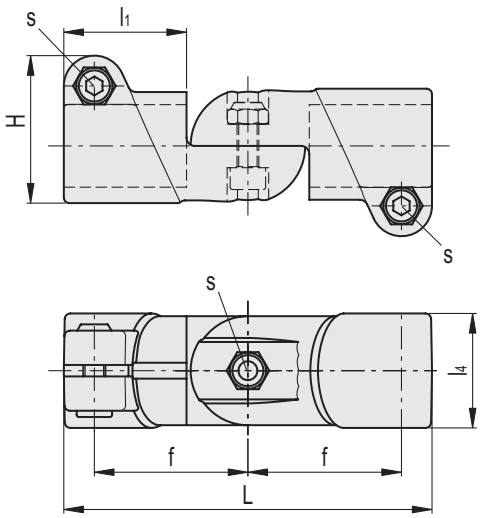

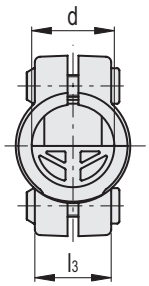

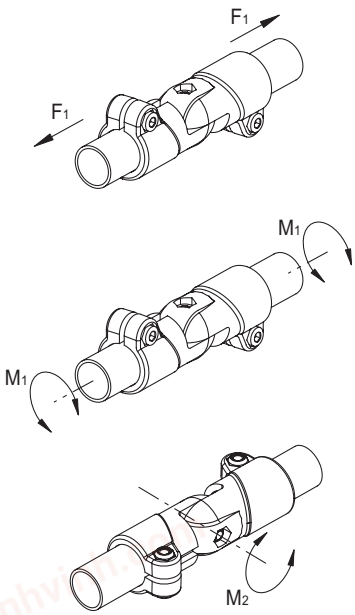

C9 RAL9005 C33 RAL7040

TCC-AP-AP-T — STAINLESS STEEL

Code	Description	d	L	H	f	l1	l3	l4	s	C# [Nm]	F1* [N]	M1** [Nm]	M2*** [Nm]	⚖
600801-C9	TCC-AP-AP-30-T-C9	30	135	54	56	45	28	42	M8	12	3300	33	140	178
600801-C33	TCC-AP-AP-30-T-C33	30	135	54	56	45	28	42	M8	12	3300	33	140	178

TCC-AP-AP-S — STAINLESS STEEL

Code	Description	d	L	H	f	l1	l3	l4	s	C# [Nm]	F1* [N]	M1** [Nm]	M2*** [Nm]	⚖
600802-C9	TCC-AP-AP-30-S-C9	30	135	54	56	45	28	42	M8	12	3300	33	6	178
600802-C33	TCC-AP-AP-30-S-C33	30	135	54	56	45	28	42	M8	12	3300	33	6	178

Suggested torque for screw assembly.

***** Resistance to tube pull out

****** Resistance to tube rotation

******* Resistance to joint rotation.

ELESA and GANTER models all rights reserved in accordance with the law.
Always mention the source when reproducing our drawings.