chanhvinh.com

Your Expert Partner for **Human Machine Interfaces**

Actuator

Distribution by
Rs-online

51-
040.005



https://rs-online.eao.com/component/51-040.00...

chanhvinh.com

Your product:



51-040.005
Actuator

FRONT

Front dimension:	24 mm x 18 mm
Front form:	Rectangular

MOUNTING

Design:	Raised
Mounting type:	Panel mounting

ELECTRICAL CHARACTERISTICS

Switching voltage and switching current:	100 mA at 42 VAC/VDC
Electric strength:	2500 VAC, 50 Hz, 1 min. between all terminals and earth, according to IEC 61058-1, part 15

MECHANICAL CHARACTERISTICS

Terminal:	Soldering terminal, 2.8 x 0.5 mm
Tightening torque:	Fixing nut max. 0.5 Nm
Weight:	0.005 kg

AMBIENT CONDITION

IP front protection:	IP65, according to DIN EN 60529
Operating temperature:	– 25 °C ... + 55 °C, mounted as a block, make sure the heat can escape freely
Storage temperature:	– 40 °C ... + 85 °C
Shock resistance:	15 g for 11 ms, as per DIN / EN 60512-4-3, DIN / EN 60068-2-27 (Single impacts, semi-sinusoidal)

CERTIFICATE

REACH:	REACH compliant
RoHS:	RoHS compliant

OTHER

Short Description:	Actuator, 24 mm x 18 mm, Rectangular, Soldering terminal, 2.8 x 0.5 mm, IP65, according to DIN EN 60529
Internal size:	21,5 mm x 15,3 mm
Housing colour:	Black

Wiring diagrams:

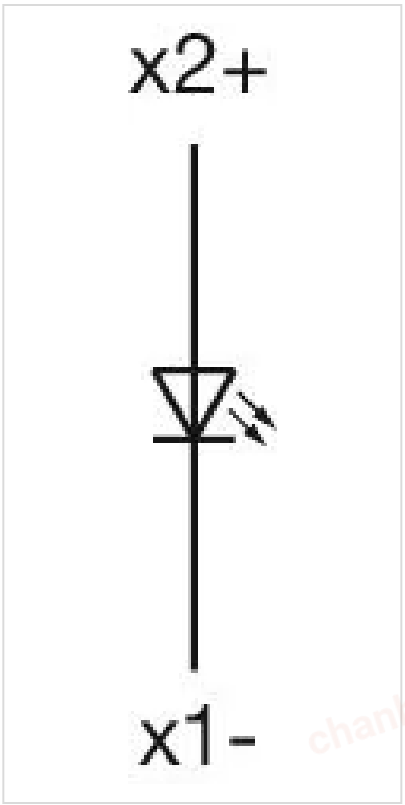

Mounting cut-outs:

chanhvinh.com

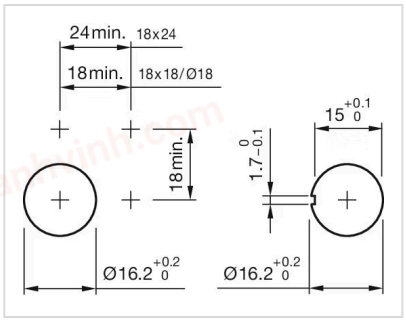

Dimension drawings:

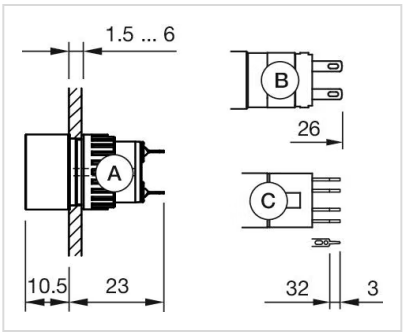

A = Solder terminal
B = Plug-in terminal 2.8 mm x 0.5 mm
C = Universal terminal 2.0 mm x 0.5 mm