chanhvinh.com

E•SWITCH®

RP8700 Series Pushbutton Switch





Specifications

Contact Arrangement: SPST
Contact Rating: 400mA @32VAC Max., 125mA @125VAC Max.
200mA @50VDC Max.
Contact Resistance: 50mΩ Max.
Insulation Resistance: 1GΩ min/500V
Dielectric Strength: 1500VAC (50Hz or 60Hz)
Electrical/Mechanical Life: 500,000/1,000,000 cycles
Operating/Storage Temperature: -30°C to 85°
Travel: 1.5mm
Moisture Protection: IP68
Actuation Force: 3-6N

Features & Benefits

Threaded mount
500,000 life expectancy
Multiple Termination options
LED illumination options
Sealed to IP68 ratings
Molded back w/ wired connector (300mm long) optional

Part Number Configurator

Series	Function	Bushing	Termination	Contact Material	Seal	Housing Color	Cap Color	LED
RP8700 **RP8701** (High cap)* **RP8702** (Round)*	**A** - Off-(On) **B** - On-(Off)*	**B2** - Threaded (12 x 0.75)	**M1** - 3.5mm Solder Lug **M2** - 5.50 high, Solder lug ** **M3** - 8.20 high, Solder lug ** **M4** - PC thru-hole ** **C** - 300mm Wire w/Connector	**C** - Gold Over Silver	**E** - Epoxy Sealed	**BLK** - Black	**WHT** - White **BLK** - Black **RED** - Red **ORG** - Orange **YEL** - Yellow **GRN** - Green **BLU** - Blue	**NIL** - Non Illuminated **WHT** - White LED **RED** - Red LED **YEL** - Yellow LED **GRN** - Green LED **BLU** - Blue LED **RG** - Red/Green LED

NOTES:
*Not available with LED
** Only available for Non-illuminated Function A

Specifications subject to change without notice 10/7/2025

chanhvinh.com

RP8700 Series Pushbutton Switch

ACTUATOR OPTIONS

RP8700

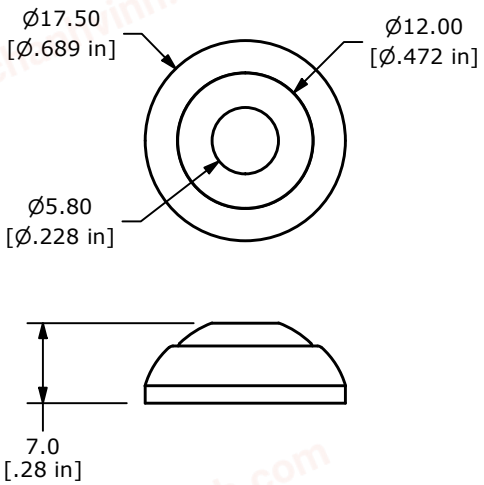

RP8700
LED ONLY WITH FUNCTION A

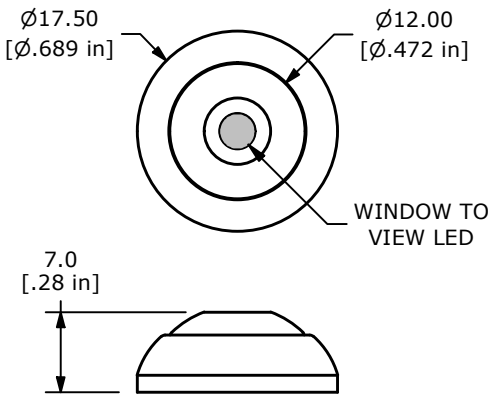

RP8701 HIGH CAP
ONLY WITH NON-ILLUMINATED FUNCTION A

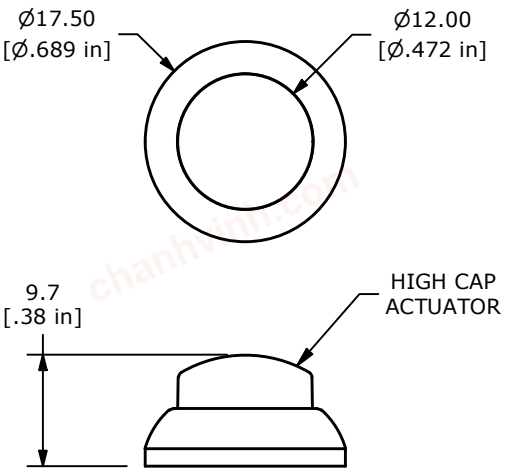

RP8702 ROUND CAP
ONLY WITH NON-ILLUMINATED FUNCTION A

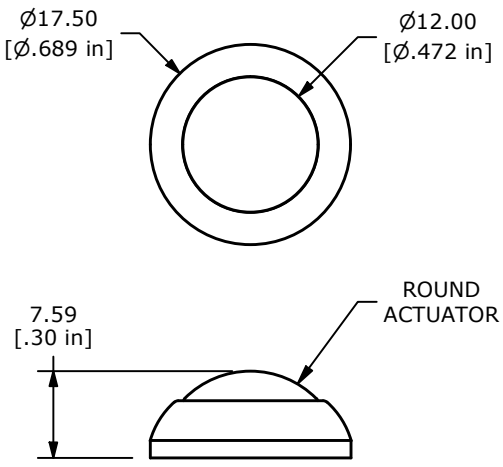

chanhvinh.com

RP8700 Series Pushbutton Switch

TERMINATION OPTIONS

M1 - 3.5MM SOLDER LUG NON-ILLUMINATED

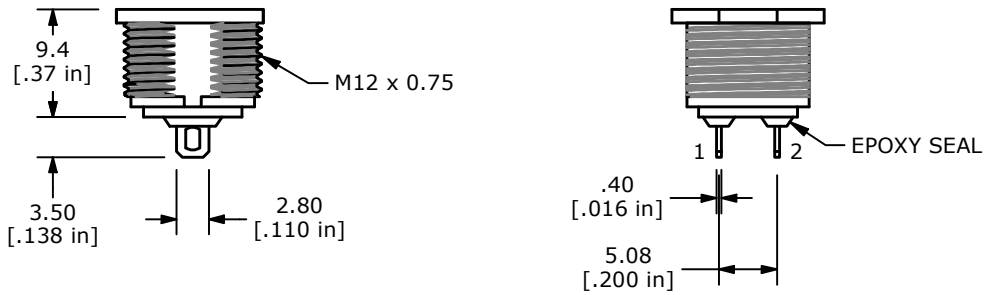

M1 - 3.5MM SOLDER LUG ILLUMINATED

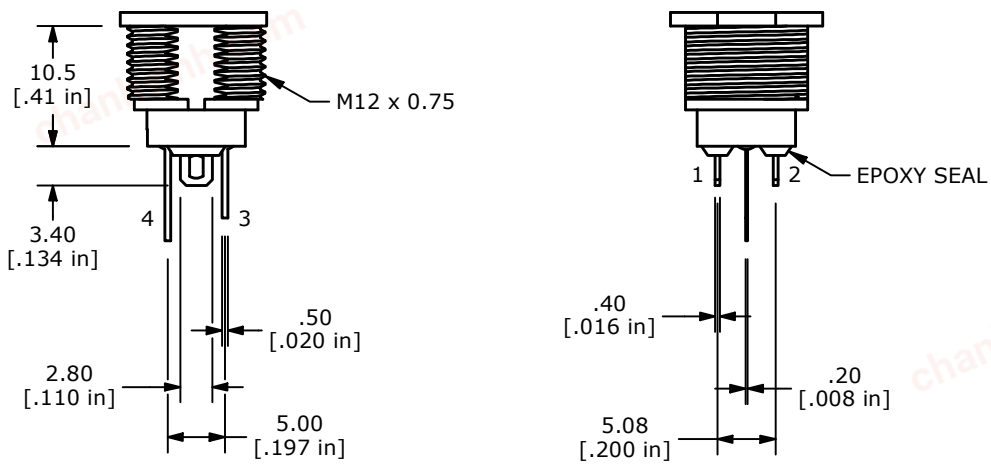

chanhvinh.com

RP8700 Series Pushbutton Switch

TERMINATION OPTIONS

M2 - 5.5MM HIGH SOLDER LUG
ONLY AVAILABLE WITH NON-ILLUMINATED FUNCTION A

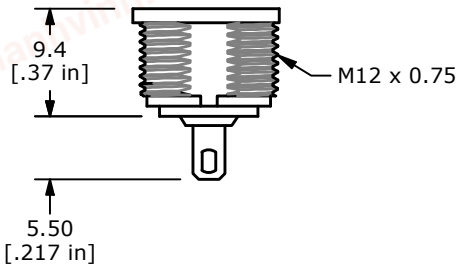

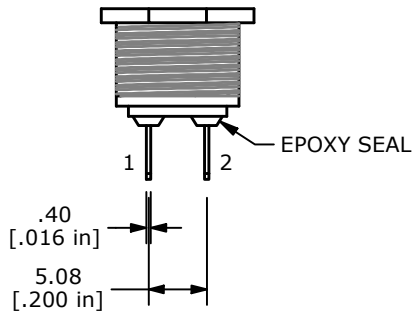

M3 - 8.2MM HIGH SOLDER LUG
ONLY AVAILABLE WITH NON-ILLUMINATED FUNCTION A

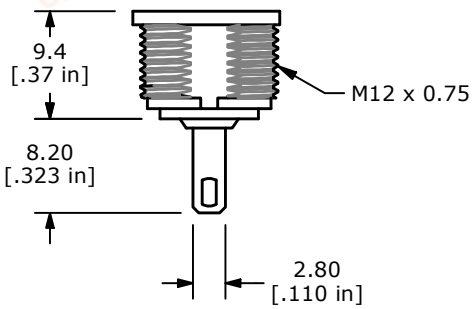

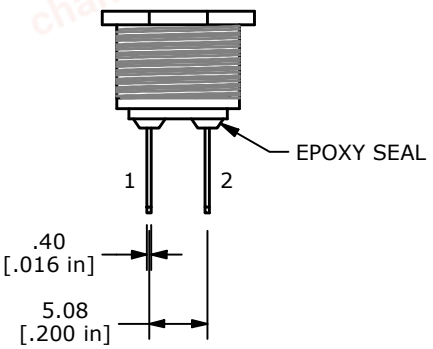

M4 - PC THRU HOLE
ONLY AVAILABLE WITH NON-ILLUMINATED FUNCTION A

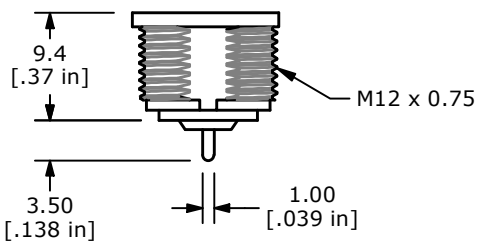

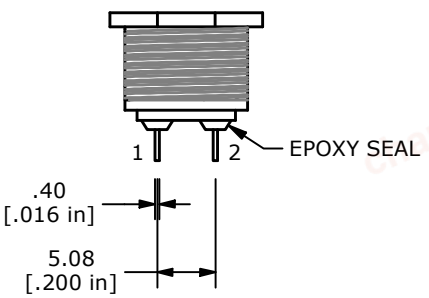

chanhvinh.com

RP8700 Series Pushbutton Switch

WIRED TERMINATION OPTIONS

NON-LED

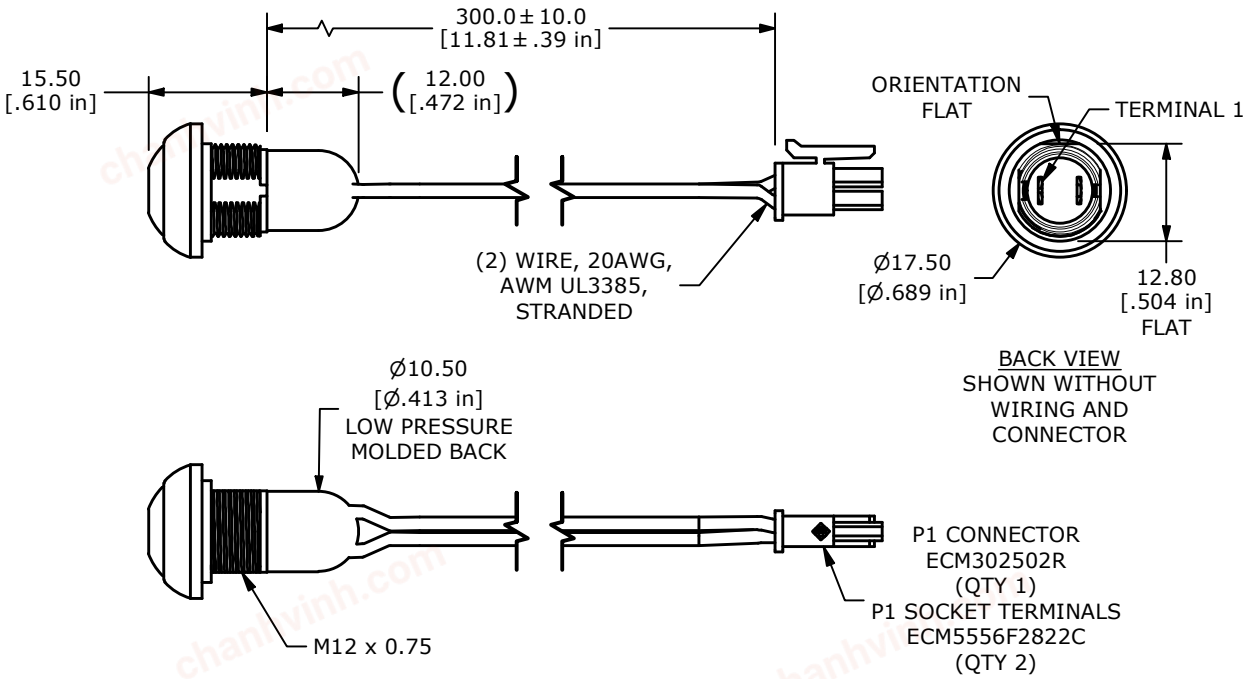

LED

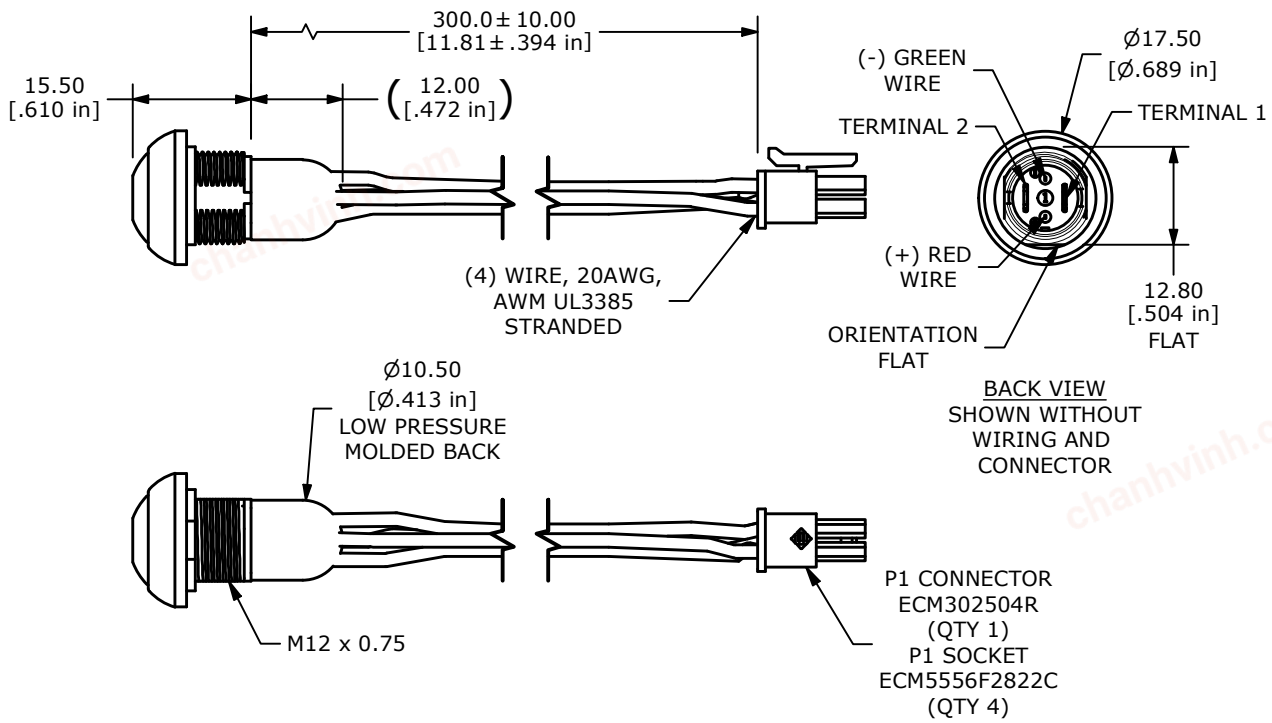

chanhvinh.com

RP8700 Series Pushbutton Switch

RECOMMENDED CUTOUT

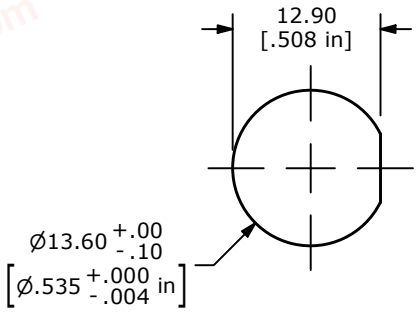

SCHEMATIC OPTIONS

NON-LED

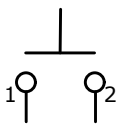

LED

NOT AVAILABLE WITH RP8701 AND RP8702

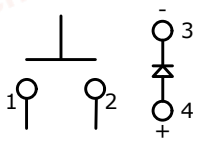

NON-LED WIRED

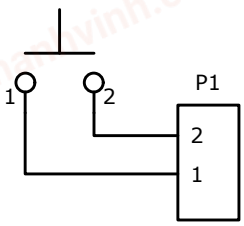

LED WIRED

NOT AVAILABLE WITH RP8701 AND RP8702

