chanhvinh.com

R1973 Series Rocker Switch



Applications / Markets

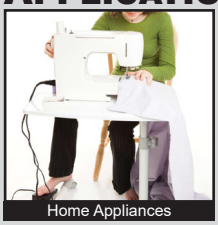
Home Appliances


Medical Equipment


Electrical Houseware


Instrumentation


Consumer Electronics


Medical / Dental

RoHS

Specifications

Contact Rating: 9A @ 125VAC [cURus]
6A @ 250VAC [cURus]
Contact Arrangement: SPST, DPST
Electrical Life: 10,000 cycles
Mechanical Life: 30,000 cycles
Insulation Resistance: >1000 MΩ
Dielectric Strength: >1,500VAC for 1 minute
Operating Temperature: -30°C to 65°C
Storage Temperature: -30°C to 80°C
Panel Thickness: 0.7mm to 3.0mm

Features & Benefits

- **Agency approvals: cURus**
- **SPST and DPST**
- **Illumination options**
- **Multiple termination options**
- **Actuator marking available**
- **Standard 13mm x 19mm panel cutout size**

Part Number Configurator

Series	Circuit	Housing Color	Actuator Color	Marking (see chart)	Termination	Lamp Voltage
R1973	**A** - SPST **B** - DPST	**BLK** - Black **WHT** - White **GRY** - Grey	**BLK** - Black **RED** - Red **GRY**- Grey **YIL** - Yellow Illuminated **GIL** - Green Illuminated **RIL**- Red Illuminated **BIL** - Blue Illuminated	**A** **D** **E** **F** **G** **I**	**F** - Faston **R** - Right Angle PC Pin	**0** - No Lamp **1** - Neon Bulb 125V-AC **2** - Neon Bulb 250V-AC **3** - LED 12V-DC **4** - LED 24V-DC

Specifications subject to change without notice 11.10.2021

chanhvinh.com

R1973 Series Rocker Switch

Body Dimensions

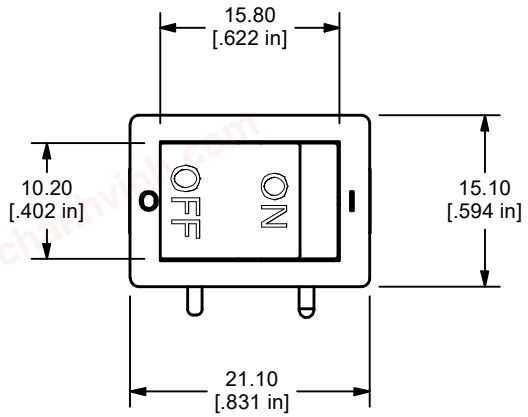

MODEL NO.	POS. 1	POS. 2
A - SPST	OFF	ON
TERMINAL CLOSURE	OPEN	1-1a or 2-2a for NON-ILLUMINATED RIGHT ANGLE PC PIN

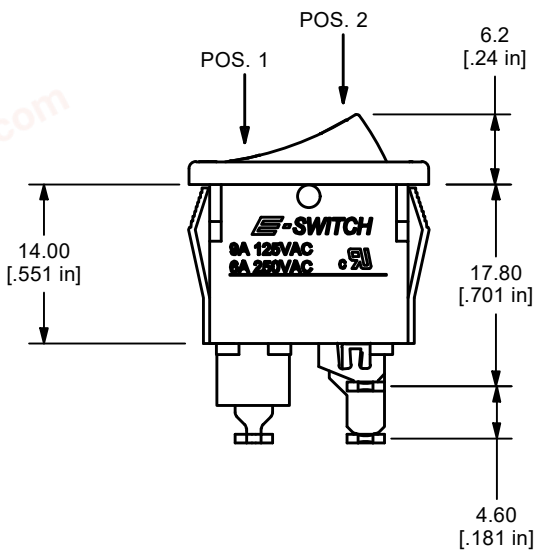

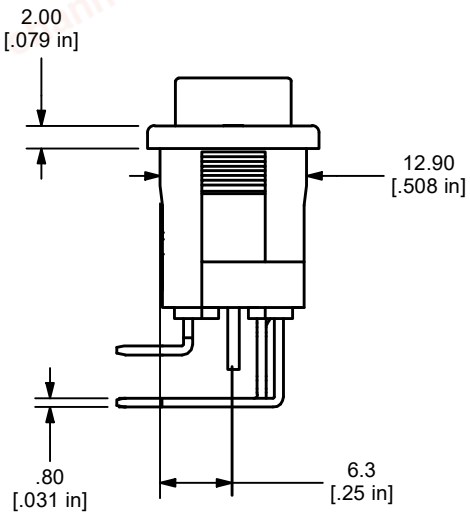

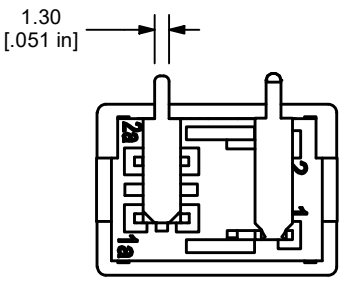

"R" TERMINAL
(RIGHT ANGLE TERMINALS BENT
TOWARDS THE LOGO SIDE)

SHOWN WITH
A - SPST ILLUMINATED
I - MARKING
R - RIGHT ANGLE PC PIN

chanhvinh.com

R1973 Series Rocker Switch

Body Dimensions

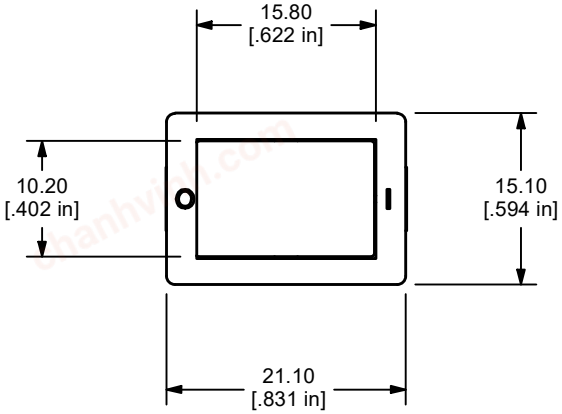

MODEL NO.	POS. 1	POS. 2
B - DPST	OFF	ON
TERMINAL CLOSURE	OPEN	1-1a, 2-2a

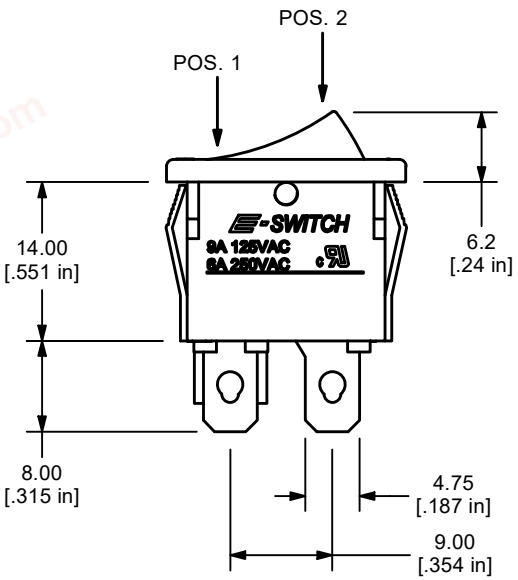

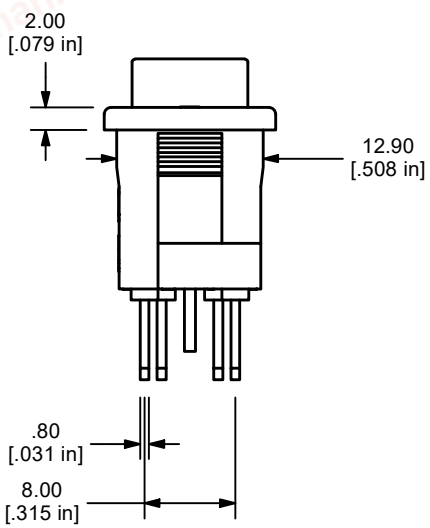

TERMINAL DESIGNATIONS
(DPST VERSION SHOWN)

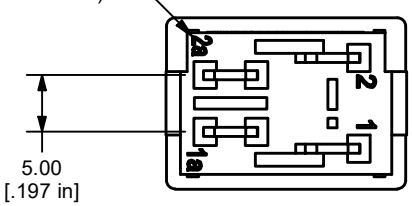

SHOWN WITH
B - DPST
E - MARKING
F - FASTON

chanhvinh.com

R1973 Series Rocker Switch

Marking Options

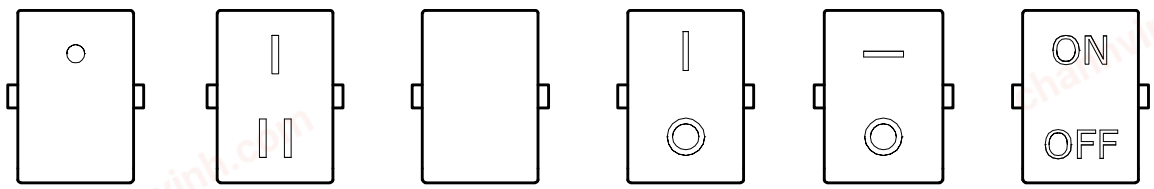

A D E F G I

PCB Layouts

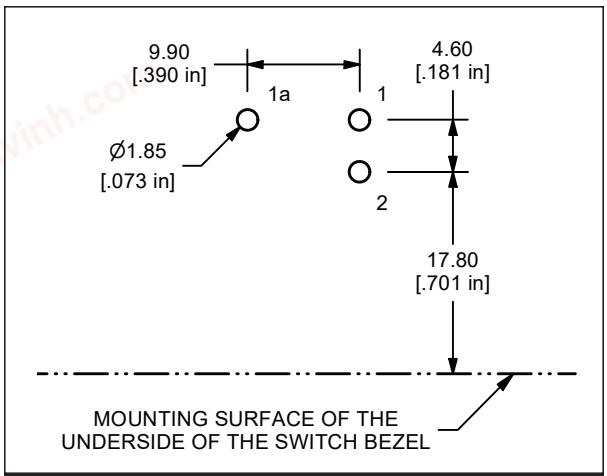

SPST Illuminated PCB Layout

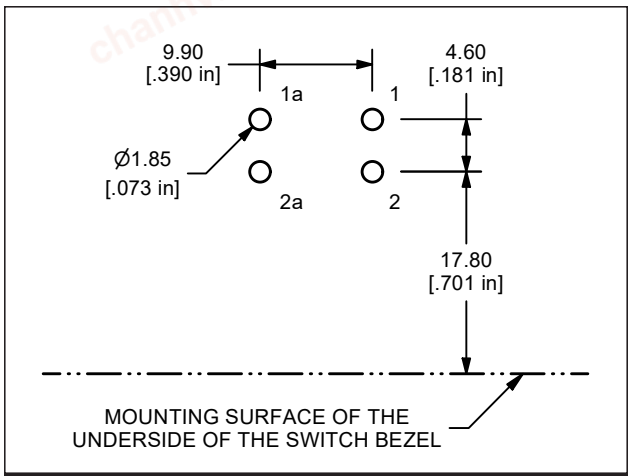

DPST PCB Layout

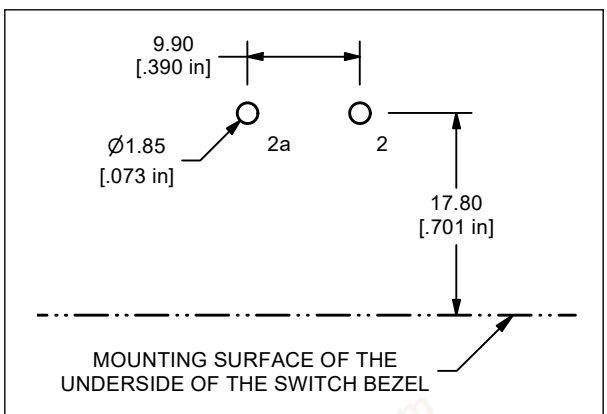

SPST Non-Illuminated PCB Layout

chanhvinh.com

R1973 Series Rocker Switch

Schematics

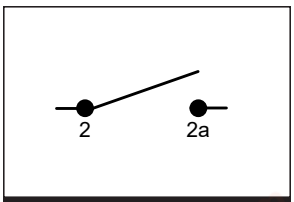

Circuit A
SPST Non-Illuminated
Right Angle PC Pin

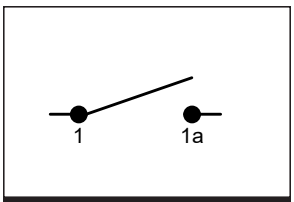

Circuit A
SPST Non-Illuminated

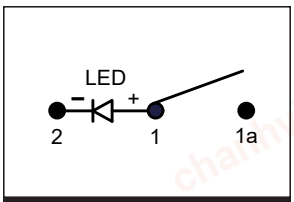

Circuit A
SPST Illuminated

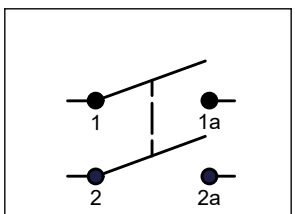

Circuit B
DPST Non-Illuminated

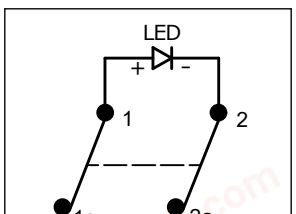

Circuit B
DPST Illuminated

Panel Cutout

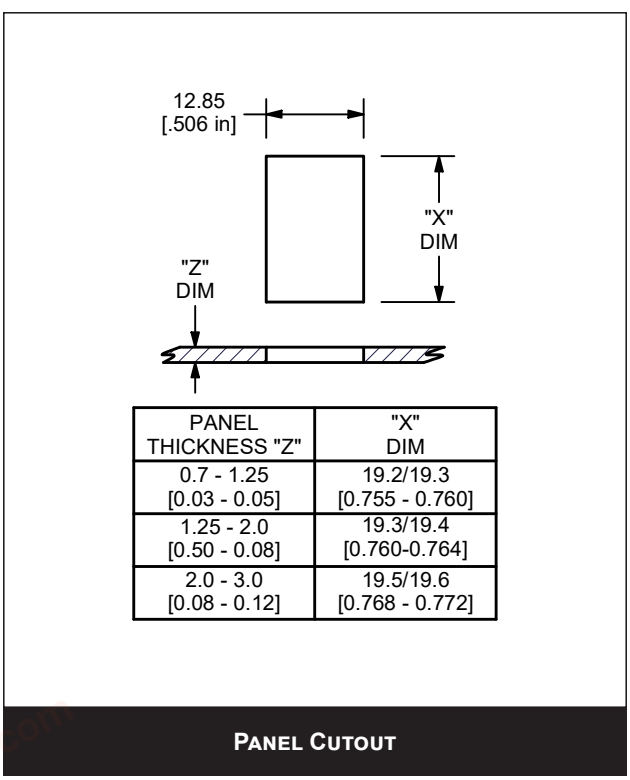

PANEL THICKNESS "Z"	"X" DIM
0.7 - 1.25 [0.03 - 0.05]	19.2/19.3 [0.755 - 0.760]
1.25 - 2.0 [0.50 - 0.08]	19.3/19.4 [0.760-0.764]
2.0 - 3.0 [0.08 - 0.12]	19.5/19.6 [0.768 - 0.772]

Panel Cutout