chanhvinh.com



SERIES 500A SWITCHES

SLIDE SWITCHES - SUB-MINIATURE



SPECIFICATIONS

Contact Rating:	3 A @ 120 VAC cURus 1 A @ 250 VAC cURus
Life Expectancy:	30,000 make-and-break cycles at full load
Contact Resistance:	10 mΩ max. typical @ 2-4 VDC 100mA for both silver and gold plated contacts
Insulation Resistance:	1,000MΩ min.
Dielectric Strength:	1,000 V rms at sea level
Operating Temperature:	-30°C to 85°C

FEATURES & BENEFITS

- Panel, SMT & PC board mountable
- Sub-miniature

APPLICATIONS/MARKETS

- Computer servers/peripherals
- Consumer electronics
- Instrumentation
- Test & measurement

MATERIALS

Case:	Diallyl phthalate (DAP)
Housing:	Stainless steel
Slide Handle:	Nylon
Contact & Terminals:	Gold or Silver plated copper alloy

HOW TO ORDER

SERIES	MODEL NO.	TERMINATION	CONTACT MATERIAL	SEAL
500A	☐☐☐☐	☐☐☐	☐	E
	SSP1 SSP3	M2 M6 SM6	Q = Silver R = Gold	E = Epoxy Sealed at Base of Terminal

Example Ordering Number

500A–SSP1–M2–R–E

Specifications subject to change without notice. 10.13.2020

SPDT



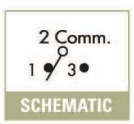

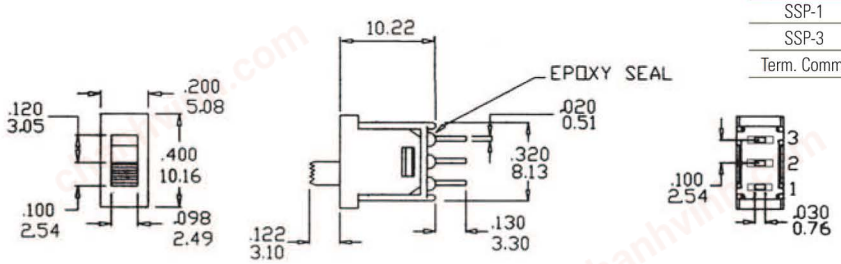

Model No.	POS 1	POS 2	POS 3
SSP-1	ON	NONE	ON
SSP-3	ON	OFF	ON
Term. Comm.	2-1	OPEN	2-3

( ) = Momentary

E•SWITCH®
Phone: 800-867-2717
Fax: 763-531-8235

chanhvinh.com

P.C. MOUNTING OPTIONS

M2

PC PIN



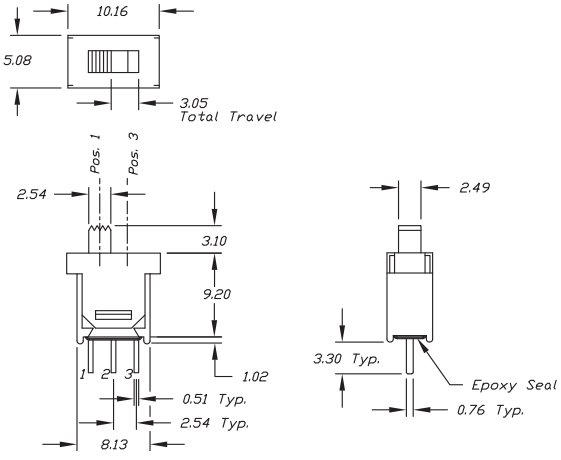

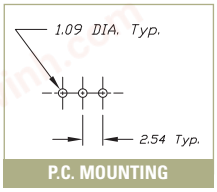

P.C. MOUNTING

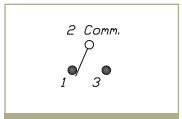

SCHEMATIC

M6



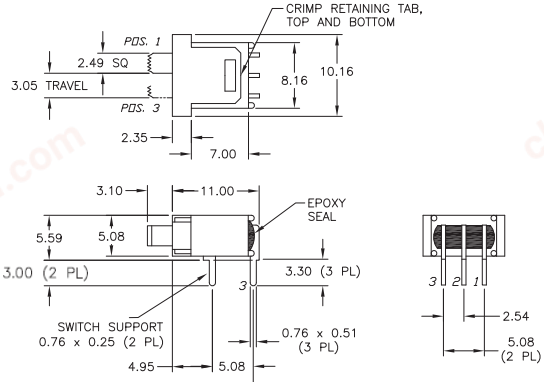

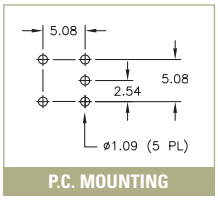

P.C. MOUNTING

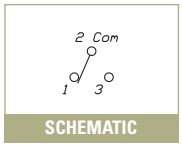

SCHEMATIC

SM6

SMT



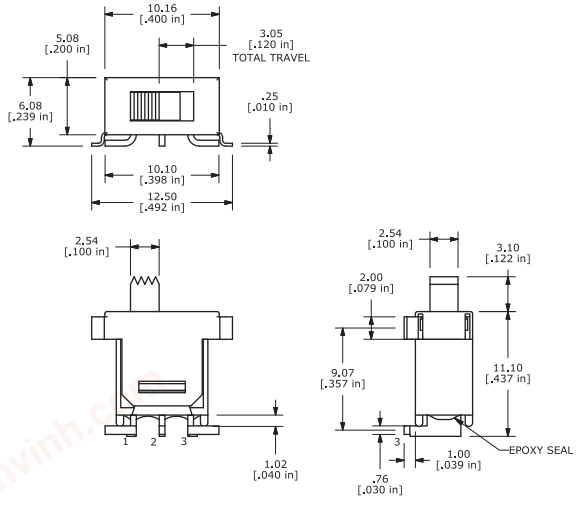

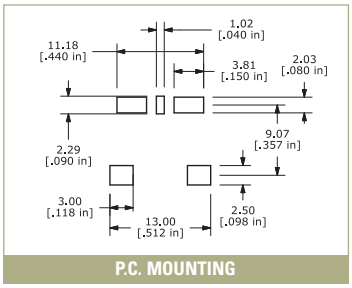

P.C. MOUNTING

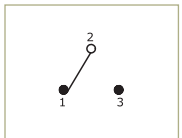

SCHEMATIC

CONTACT MATERIAL OPTIONS

Q

Fixed Terminal:	Silver plated copper alloy
Moving Contact:	Silver plated copper alloy
Rating:	3 Amps with resistive load @ 120VAC or 28VDC 1 Amp with resistive load @ 250VAC

R

Fixed Terminal:	Copper alloy with gold plate over nickel plate
Moving Contact:	Copper alloy with gold plate over nickel plate
Rating:	0.4 Volt-Amps (VA) max. @ 20V max. (AC or DC)