chanhvinh.com

DURAKOOL®

DG57BM Series
Automotive / Electric Vehicle Relay



- General Purpose automotive or industrial relay
- Good inrush current resistance
- Ideal for DC motor control
- High continuous DC current capability
- Optimised for up to 110VDC switching
- Magnet arc blowout feature
- Industry standard terminal layout

RoHS Compliant ✓

Contacts

Contact arrangement		SPST-NO (1 Form A), SPDT (1 Form C)
Contact material		$AgSnO_2$
Max. switching voltage	DC	110VDC
Min. switching current / voltage		100mA / 12VDC
Rated load - see Fig. 1	DC1	60A @ 12VDC, 25A @ 36VDC, 20A @ 48VDC
		15A @ 72VDC, 7A @ 110VDC
Max. switching current	make	120A @ 12.8VDC (3secs)
Initial Contact resistance		<100mΩ, at 0.1A / 6VDC

Coil

Nominal voltage	DC	6 ... 60V
Must release voltage		≥0.1U_n
Operating range		See Table 1
Rated power consumption		1.6W; 1.8W with resistor

Insulation

Insulation resistance		100MΩ at 500VDC, 50%RH
Dielectric strength	coil to contact	750Vrms, 1min
	contact to contact	500Vrms, 1min

General Data

Operating time	typ.	7ms
Release time	typ.	2ms
Electrical life	ops.	1 x 10^5
Mechanical life	ops.	1 x 10^7

Environmental

Ambient temperature	operating	-40 to +125°C (above 85°C - consult factory)
	storage	-40 to +155°C
Shock resistance	functional	30g, 6ms
	destructive	100g
Vibration resistance		DA 1.27mm 10-40Hz / 40-70Hz:5g
		DA 0.5mm 100-500Hz: 10g
Dimensions	L x W x H	39.1 x 28 x 26mm (excluding terminals)
Weight	approx.	46g

Ordering Code

D G 5 7 B M - 5 0 1 1 - 9 6 - 1 0 1 2 - M3 D R

Series

Contact material
50: $AgSnO_2$

Contact arrangement
11: SPDT (1 C/O, 1 Form C)
21: SPST-NO (1 N/O, 1 Form A)

Coil code:
See table 1

Environmental protection
3: In cover, sealed - IP67
7: In cover, dust cover - IP54
9: Cover with mounting bracket slot

Connection Mode
5: PCB Terminals
6: Flat Blades

Options 1 (metal mounting bracket)
Nil: No bracket
M1: Metal mounting bracket fitted (5.3mm mounting hole)
M3: Metal mounting bracket fitted (6.3mm mounting hole)

Options 2 (parallel components)
Nil: No option
R: Integral resistor
D: Integral diode +85, -86 (special order)
DR: Integral diode -85, +86 (standard)

Order code examples (many other combinations possible)
DG57BM-5021-75-1012 = unsealed, pcb, no bracket
DG57BM-5011-76-1012 = unsealed, no bracket (standard)
DG57BM-5021-36-1012-R = sealed, no bracket, resistor
DG57BM-5021-36-1012-M1R = sealed, metal bracket, resistor
DG57BM-5021-96-1012-M3 = unsealed, metal bracket
DG57BM-5011-96-1012 = unsealed, cover with slot, no bracket

Specifications are subject to change without notice. E&OE.

DURAKOOL®

DG57BM Series
Automotive / Electric Vehicle Relay

Coil Data — Table 1

Coil code	Nominal voltage (VDC)	Coil resistance (Ω) ±10% at 23°C	Must operate voltage max. at 23°C (VDC)	Max. allowable voltage at 23°C (VDC)	Max. allowable voltage at 85°C (VDC)	Must release voltage min. (VDC)
1006	6	22	3.6	8.7	6.3	0.6
1012	12	90	7.2	17.4	12.5	1.2
1024	24	330	14.4	34.8	25.0	2.4
1036	36	690	21.5	52.2	37.5	3.6
1048	48	1440	28.8	69.6	50.0	4.8
1050	50	1565	30.0	72.5	52.0	5.0
1060	60	1950	36.0	87.0	62.6	6.0

Performance — Fig. 1

Max. DC resistive load breaking capacity

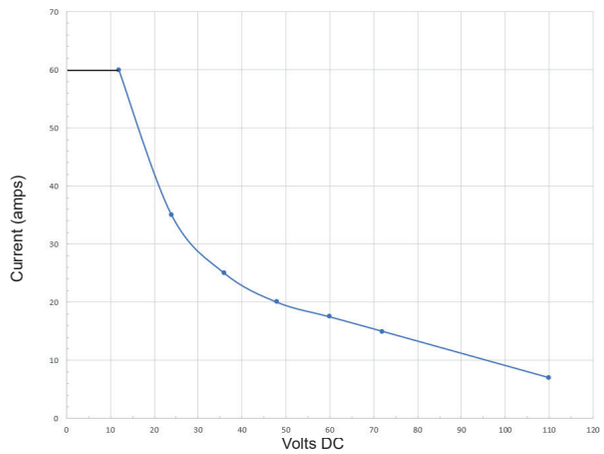

Circuit Diagram — Fig. 2

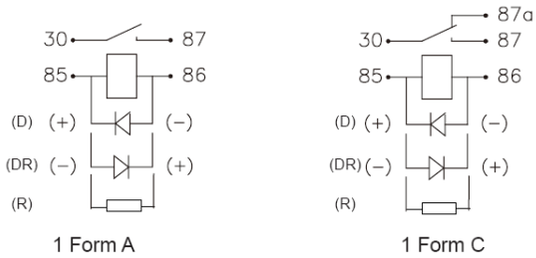

Dimensions — Fig. 3

Plug-in

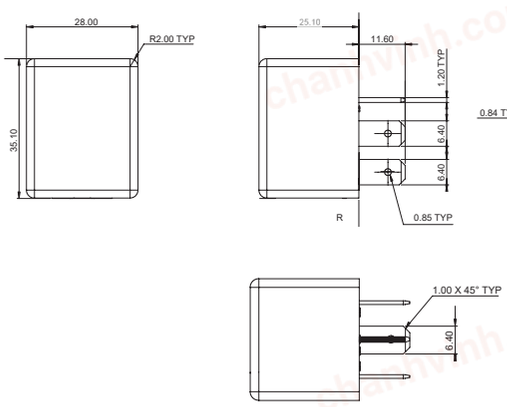

Plug-in with metal mounting bracket

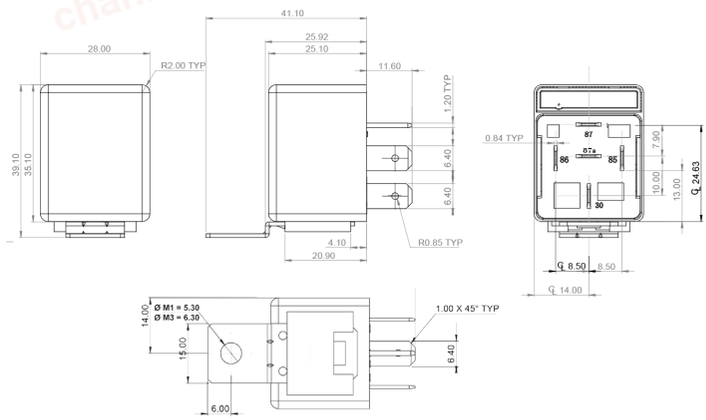

Terminal 87a omitted for SPST-NO type

PCB Mounting

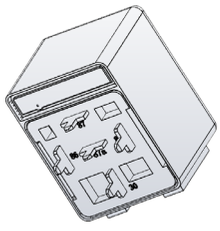

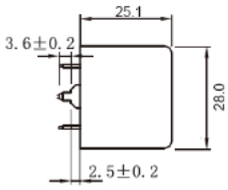

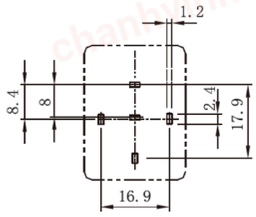

Dimensions in mm

Specifications are subject to change without notice. E&OE.