chanhvinh.com

Lead-free Green

ULN62003A

HIGH VOLTAGE, HIGH CURRENT DMOS ARRAYS

Description

The DIODES™ ULN62003A is a high-voltage, high-current transistor array containing seven open drain devices, with all of their sources connected to a common ground. The transistors are rated at 500mA with each having a clamp diode for protection needed for driving inductive loads.

The DMOS output construction has a lower on-resistance than the common bipolar devices reducing power dissipation, allowing the designer additional flexibility to control more devices and maintain the desired die temperature.

These devices are capable of driving multiple load types such as solenoids, relays, DC motors, LED displays, filament lamps, thermal print-heads, and high-power buffers.

The device is pinned in opposition to simplify board layout and is a direct replacement for many common peripheral drivers. The ULN62003A is available in an industry-standard, small outline, 16-pin package SO-16 (Type SM).

Pin Assignments

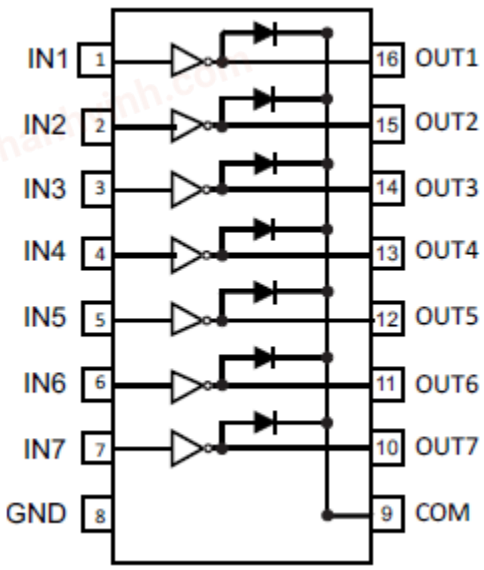

SO-16 (Type SM)

Features

- 500mA Rated Drain Current (Single Output)
- High Voltage Outputs: 50V
- Output Clamp Diodes
- Inputs Compatible with Popular Logic Types
- Relay Driver Applications
- **Totally Lead-Free & Fully RoHS Compliant (Notes 1 & 2)**
- **Halogen and Antimony Free. "Green" Device (Note 3)**
- **For automotive applications requiring specific change control (i.e. parts qualified to AEC-Q100/101/104/200, PPAP capable, and manufactured in IATF 16949 certified facilities), please contact us or your local Diodes representative. https://www.diodes.com/quality/product-definitions/**

Applications

- Appliances
  - Window A/Cs
  - Washers/dryers
  - Microwaves/ranges/ovens
- Industrial and agricultural automation
- Residential and industrial HVAC systems
- Stepper motor drivers
- Thermal print heads

Notes:
1. No purposely added lead. Fully EU Directive 2002/95/EC (RoHS), 2011/65/EU (RoHS 2) & 2015/863/EU (RoHS 3) compliant.
2. See https://www.diodes.com/quality/lead-free/ for more information about Diodes Incorporated's definitions of Halogen- and Antimony-free, "Green" and Lead-free.
3. Halogen- and Antimony-free "Green" products are defined as those which contain <900ppm bromine, <900ppm chlorine (<1500ppm total Br + Cl) and <1000ppm antimony compounds.

© 2022 Copyright Diodes Incorporated. All Rights Reserved.

chanhvinh.com

Pin Descriptions

Pin Number SO-16 (Type SM)	Pin Name	Function
1	IN1	Input Pair 1
2	IN2	Input Pair 2
3	IN3	Input Pair 3
4	IN4	Input Pair 4
5	IN5	Input Pair 5
6	IN6	Input Pair 6
7	IN7	Input Pair 7
8	GND	Common Source (Ground)
9	COM	Common Clamp Diodes
10	OUT7	Output Pair 7
11	OUT6	Output Pair 6
12	OUT5	Output Pair 5
13	OUT4	Output Pair 4
14	OUT3	Output Pair 3
15	OUT2	Output Pair 2
16	OUT1	Output Pair 1

Functional Block Diagram

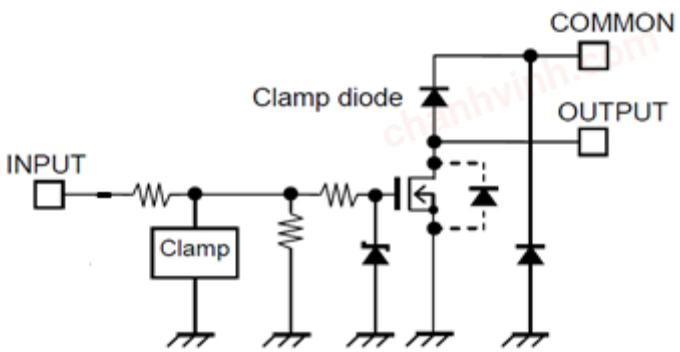

One of Seven Channels

© 2022 Copyright Diodes Incorporated. All Rights Reserved.

chanhvinh.com

Absolute Maximum Ratings (Note 4) (@T_A = +25°C, unless otherwise specified.)

Symbol	Parameter			Rating	Unit
V_{OUT}	Output Voltage			50	V
V_R	Clamp Diode Reverse Voltage (Note 5)			50	V
V_I	Input Voltage (Note 5)			-1 to 30	V
I_F	Clamp Diode Forward Current			500	mA
I_{OUT}	Output Current			500	mA
θ_{JA}	Thermal Resistance Junction-to-Ambient (Note 6)	SO-16 (Type SM)	B1 (Note 8)	120	°C/W
			B2 (Note 9)	80	°C/W
θ_{JC}	Thermal Resistance Junction-to-Case (Note 7)	SO-16 (Type SM)	B1 (Note 8)	28	°C/W
			B2 (Note 9)	18	°C/W
T_J	Junction Temperature			+150	°C
T_{STG}	Storage Temperature			-65 to +150	°C

Notes:
4. Stresses greater than those listed under *Absolute Maximum Ratings* can cause permanent damage to the device. These are stress ratings only, and functional operation of the device at these or any other conditions beyond those indicated under *Recommended Operating Conditions* is not implied. Exposure to *Absolute Maximum Ratings* for extended periods can affect device reliability.
5. All voltage values are with respect to the GND (Pin 8), unless otherwise noted.
6. Maximum power dissipation is a function of T_J (max), θ_{JA} and T_A. The maximum allowable power dissipation at any allowable ambient temperature is $P_D = (T_J (max) – T_A)/\theta_{JA}$. Operating at the absolute maximum T_J of +150°C can affect reliability.
7. Maximum power dissipation is a function of T_J (max), θ_{JC} and T_A. The maximum allowable power dissipation at any allowable ambient temperature is $P_D = (T_J (max) – T_C)/\theta_{JC}$. Operating at the absolute maximum T_J of +150°C can affect reliability.
8. B1: test performed on PCB (25.4mm x 25.4mm x 1.6mm, 1 signal layer, no GND plane, 2oz Cu thickness, FR4 substrate). This configuration results in a maximum power dissipation of 1.04 watts at T_A = +25°C. When T_A exceeds +25°C, max Pd is derated 8.3mW/°C.
9. B2: test performed on JEDEC 2s2p High K board. This configuration results in a maximum power dissipation of 1.56 watts at T_A = +25°C. When T_A exceeds +25°C, max Pd is derated 12.5mW/°C.

Recommended Operating Conditions

Symbol	Parameter	Min	Max	Unit
V_{CC}	Drain to Source Voltage	—	50	V
T_A	Operating Ambient Temperature	-40	+125	°C

© 2022 Copyright Diodes Incorporated. All Rights Reserved.

chanhvinh.com

Electrical Characteristics (@T_A = +25°C, unless otherwise specified.)

ULN62003A								
Parameter		**Test Figure**	**Test Conditions**		**Min**	**Typ**	**Max**	**Unit**
Vout	Output Voltage	—	—	—	—	—	50	V
Vcom	COM Pin Voltage	—	—	—	0	—	50	V
Iout	Output Current	—	1 circuit on	—	0	—	400	mA
	—	Duty = 10%	7 circuit on	Tpw = 25ms T_A = +85°C T_J = +125°C	—	—	270	mA
	—	Duty = 50%	7 circuits on	Tpw = 25ms T_A = +85°C T_J = +125°C	—	—	120	mA
Vin(on)	Input Voltage	—	Iout = 100mA or upper	Vout = 2V	2.5	—	25	V
Vin(off)	Input Voltage	—	Iout = 100µA or less	Vout = 2V	0	—	0.6	V
I_F	Clamp Diodes Forward Current	—	—	—	—	—	400	mA
Ileak	Output Leakage Current	1	Vout = 50V, T_A = +85°C	Vin = 0V	—	—	1	µA
Vds	Output Voltage (Output On-Resistance)	2	Iout = 350mA	Vin = 5.0V	—	0.7	1.14	V
			—	—	—	2.0	3.25	Ω
			Iout = 200mA	Vin = 5V	—	0.4	0.65	V
			—	—	—	2	3.25	Ω
			Iout = 100mA	Vin = 5V	—	0.2	0.325	V
			—	—	—	2.0	3.25	Ω
Iin(On)	Input Current (Output On)	3	Vin = 2.5V	—	—	—	0.1	mA
Iin(Off)	Input Current (Output Off)	4	Vin = 0, T_A = +85°C	—	—	—	1	µA
Iin(Off)_N	Input Current (Output Off)	3	Vin = -1.0V T_A = 0 to +85°C	—	—	0.1	4	mA
Vin(On)	Input Voltage (Output On)	5	Iout = 100mA	Vout = 2V	—	—	2.5	V
I_R	Clamp Diodes Reverse Current	6	V_R = 50V	T_A = +85°C	—	—	1.0	µA
V_F	Clamp Diodes Forward Voltage	7	I_F = 350mA	—	—	—	2.0	V
ton	Turn-On Delay	8	Vout = 50V	RL = 125Ω CL = 15Pf	—	0.4	—	µs
toff	Turn-Off Delay	8	—	—	—	0.8	—	µs

© 2022 Copyright Diodes Incorporated. All Rights Reserved.

chanhvinh.com

Parameter Measurement Circuits

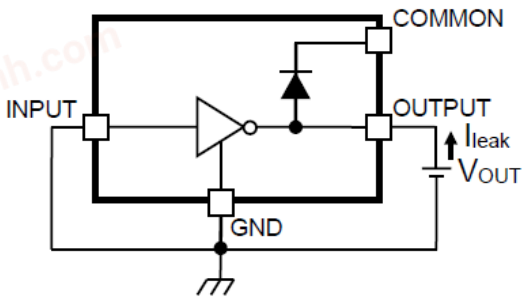

Fig.1 I_{leak}

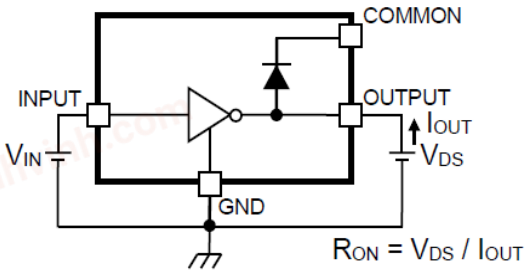

Fig.2 V_{DS}

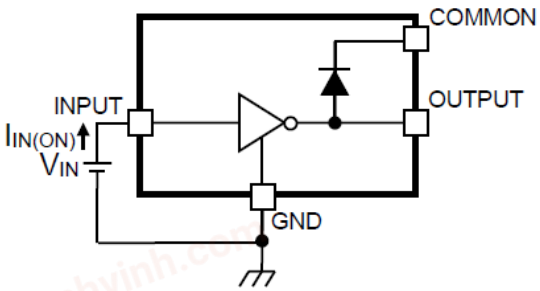

Fig.3 $I_{IN(ON)}$

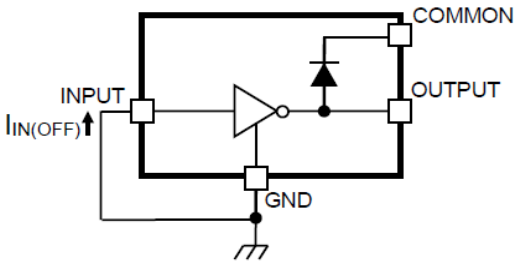

Fig.4 $I_{IN(OFF)}$

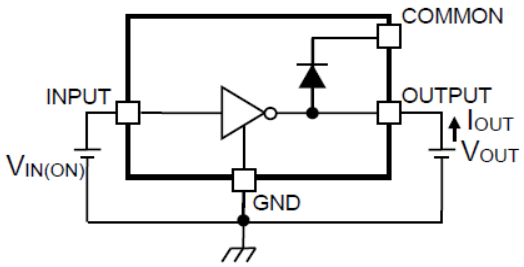

Fig.5 $V_{IN(ON)}$

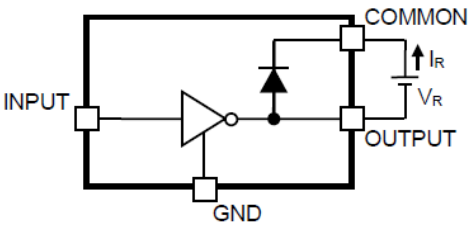

Fig.6 I_R

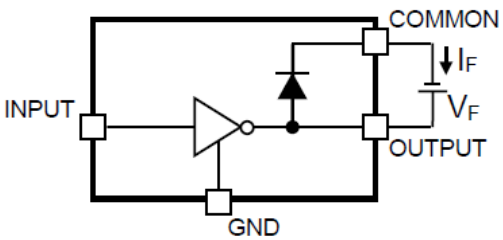

Fig.7 V_F

© 2022 Copyright Diodes Incorporated. All Rights Reserved.

chanhvinh.com

Parameter Measurement Circuits (continued)

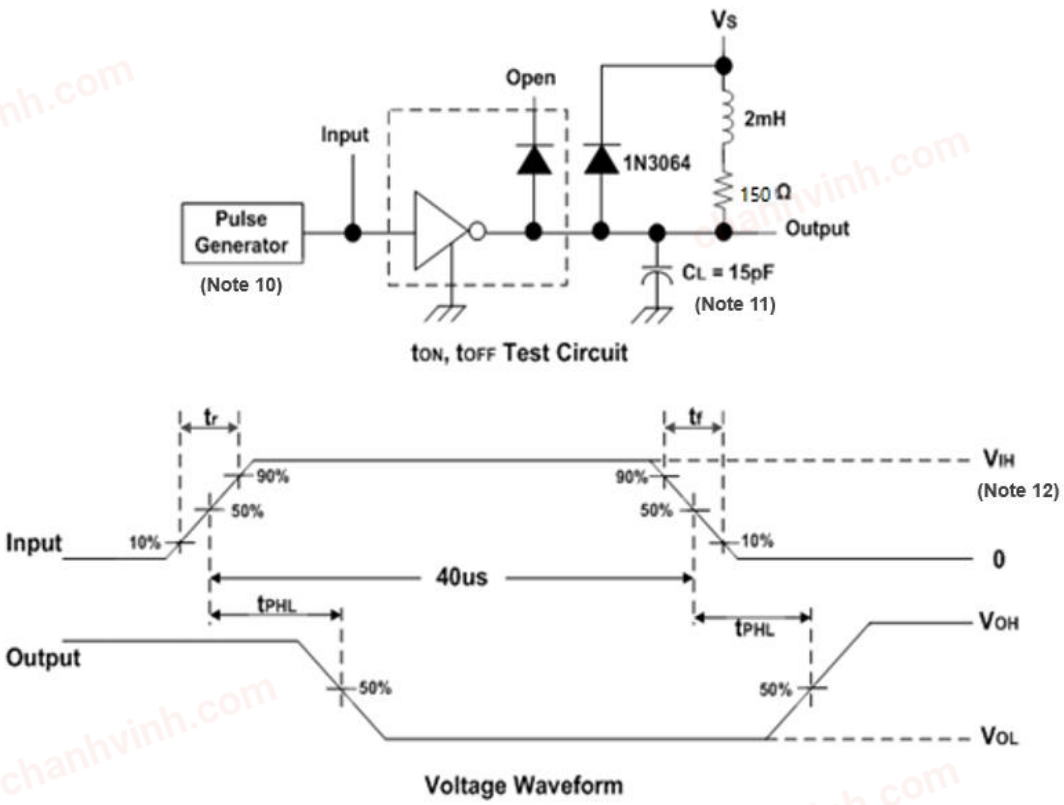

Fig. 8 Latch-Up Test Circuit and Voltage Waveform

Notes: 10. The pulse generator has the following characteristics: pulse width = 40µs, duty cycle = 10%, output impedance 50Ω, tr ≤ 5ns, tf ≤ 10ns.
11. CL includes probe and the test board capacitance.
12. For testing for the ULN62003A, VIH = 5V.

© 2022 Copyright Diodes Incorporated. All Rights Reserved.

chanhvinh.com

Typical Performance Characteristics

Output Low Voltage vs. Output Sink Current (One Darlington)

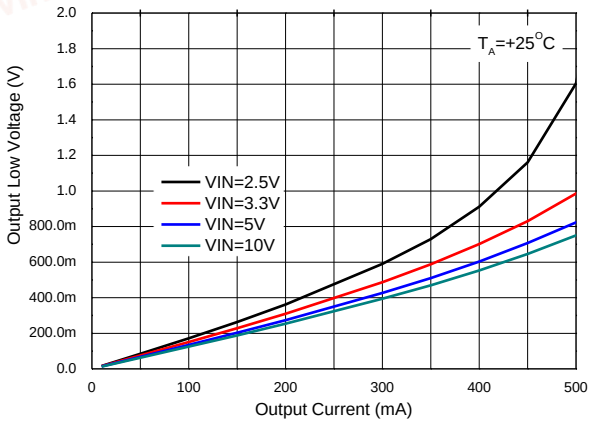

MOSFET ON Resistor vs. Output Current

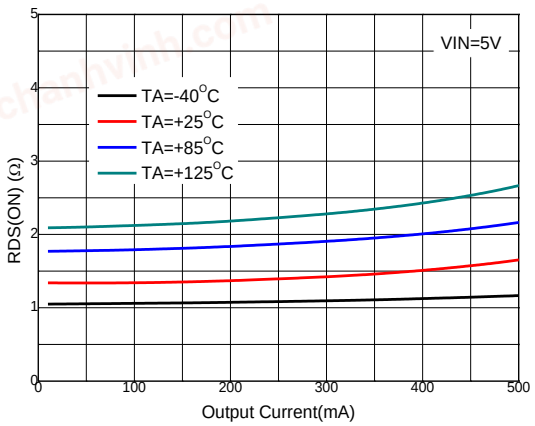

MOSFET ON Resistor vs. Output Current

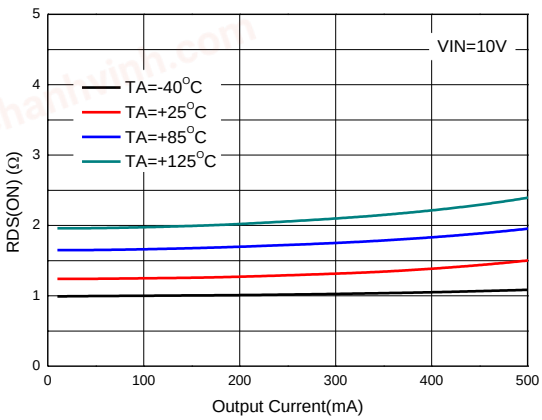

MOSFET ON Resistor vs. Input Voltage

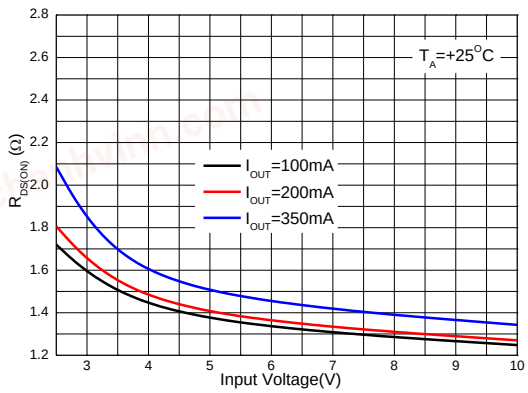

MOSFET ON Resistor vs. Temperature

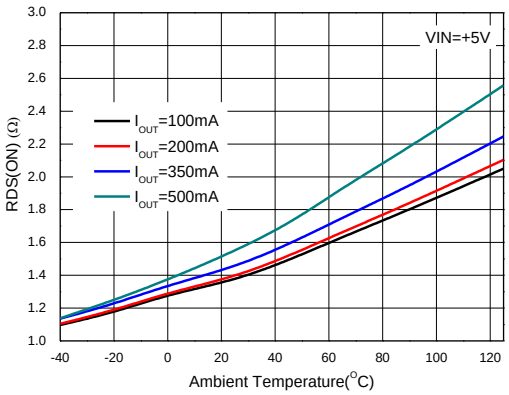

Clamp Diode Forward Voltage vs. Forward Current

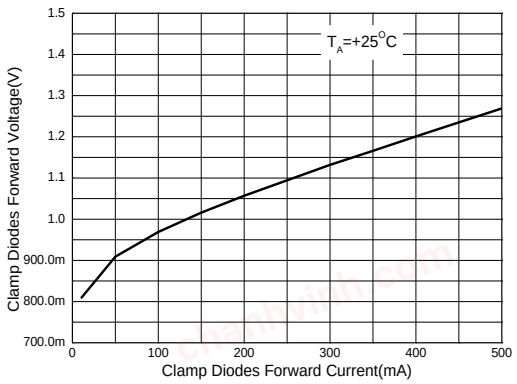

© 2022 Copyright Diodes Incorporated. All Rights Reserved.

chanhvinh.com

Typical Performance Characteristics (continued)

Input On Voltage vs. Output Current

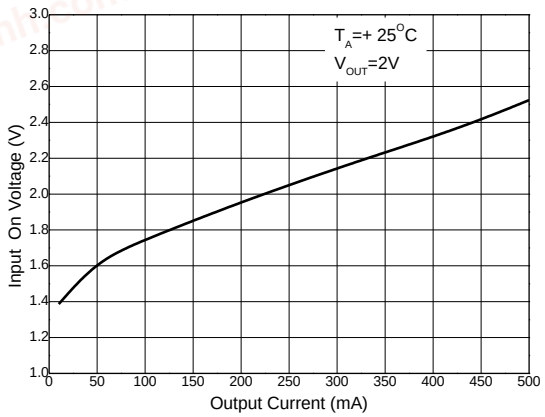

Input On Voltage vs. Temperature

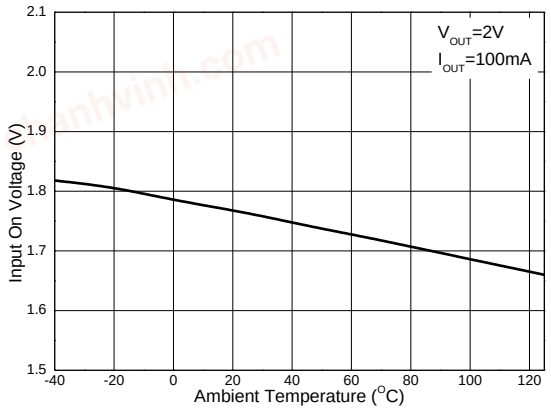

Input On Current vs. Temperature

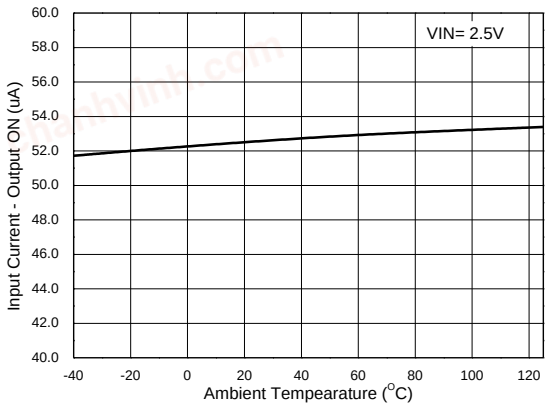

Max. Drain-Source Current vs. Duty Cycle

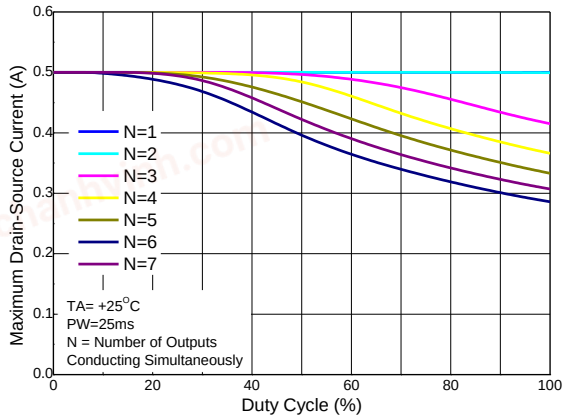

Max. Drain-Source Current vs. Duty Cycle

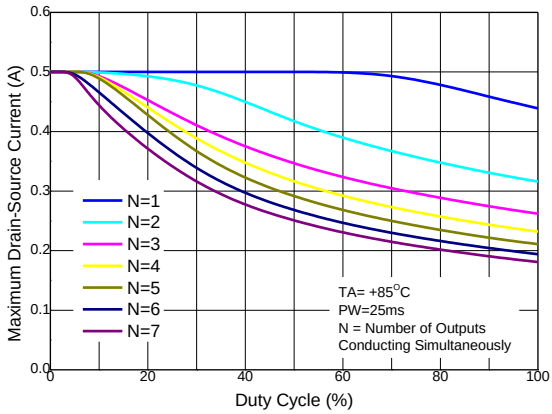

© 2022 Copyright Diodes Incorporated. All Rights Reserved.

chanhvinh.com

Ordering Information

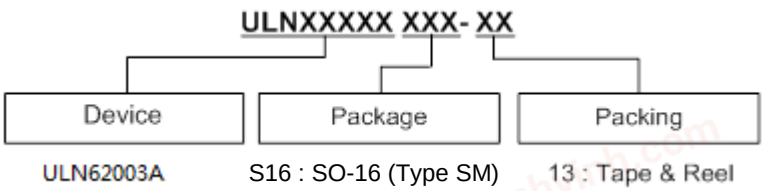

Part Number	Part Number Suffix	Package Code	Package	Packing	
				Qty.	Carrier
ULN62003AS16-13	-13	S16	SO-16 (Type SM)	4,000	13” Tape & Reel

Marking Information

(1) SO-16 (Type SM)

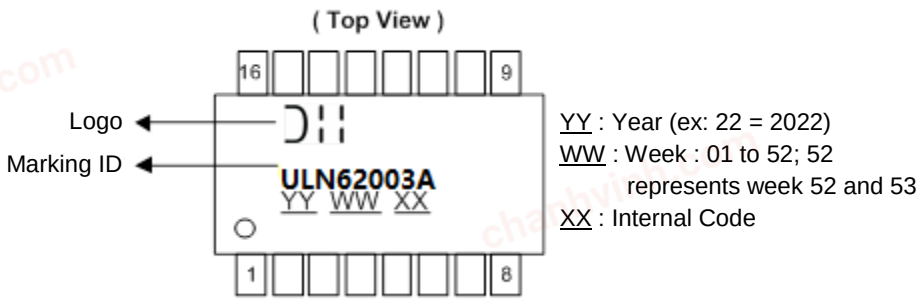

© 2022 Copyright Diodes Incorporated. All Rights Reserved.

chanhvinh.com

Package Outline Dimensions

Please see http://www.diodes.com/package-outlines.html for the latest version.

SO-16 (Type SM)

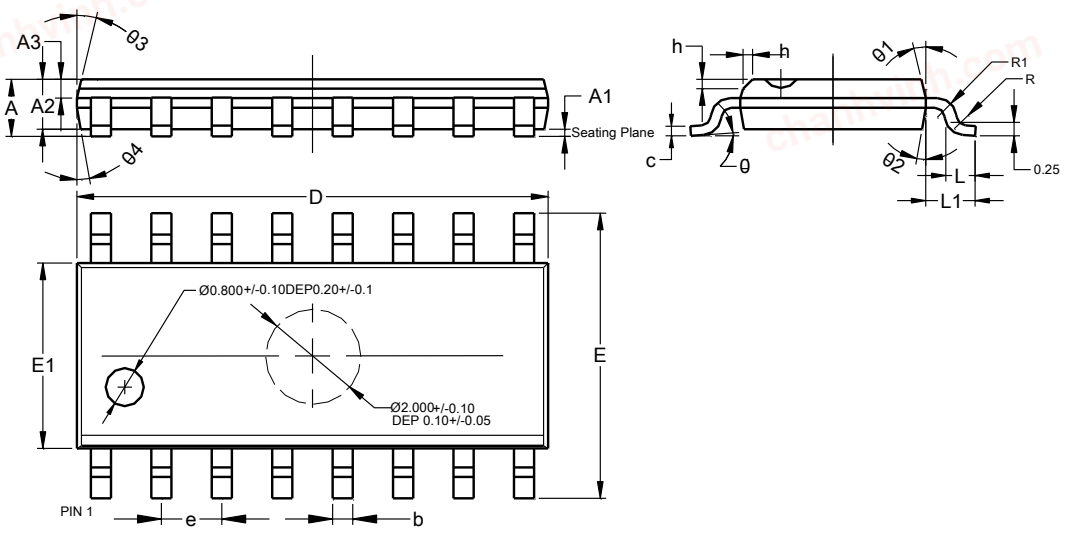

SO-16 (Type SM)			
Dim	**Min**	**Max**	**Typ**
A	1.35	1.75	1.60
A1	0.10	0.25	0.15
A2	1.25	1.65	1.45
A3	0.55	0.75	0.65
b	0.36	0.51	--
c	0.17	0.25	--
D	9.80	10.00	9.90
E	5.80	6.20	6.00
E1	3.80	4.00	3.90
e	1.27BSC		
h	0.30	0.50	0.40
L	0.45	0.80	0.60
L1	1.04REF		
R	0.07	--	--
R1	0.07	--	--
θ	0°	8°	--
θ1	10°	14°	12°
θ2	8°	12°	10°
θ3	10°	14°	12°
θ4	8°	12°	10°
All Dimensions in mm			

Suggested Pad Layout

Please see http://www.diodes.com/package-outlines.html for the latest version.

SO-16 (Type SM)

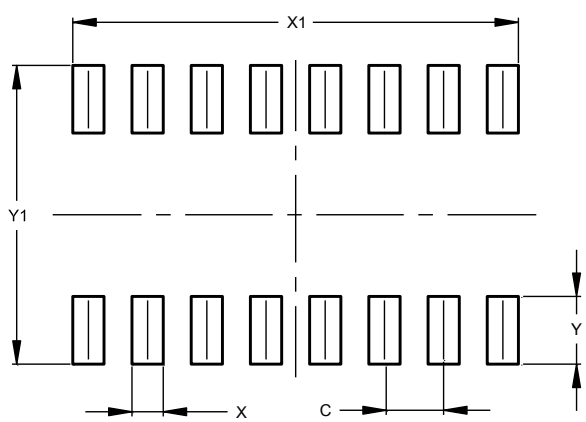

Dimensions	Value (in mm)
C	1.270
X	0.670
X1	9.560
Y	1.450
Y1	6.400

Mechanical Data

- Moisture Sensitivity: Level 3 per J-STD-020
- Terminals: Finish – Matte Tin Plated Leads, Solderable per MIL-STD-202, Method 208 (e3)
- Weight: 0.16 grams (Approximate)

© 2022 Copyright Diodes Incorporated. All Rights Reserved.

chanhvinh.com

IMPORTANT NOTICE

1. DIODES INCORPORATED (Diodes) AND ITS SUBSIDIARIES MAKE NO WARRANTY OF ANY KIND, EXPRESS OR IMPLIED, WITH REGARDS TO ANY INFORMATION CONTAINED IN THIS DOCUMENT, INCLUDING, BUT NOT LIMITED TO, THE IMPLIED WARRANTIES OF MERCHANTABILITY, FITNESS FOR A PARTICULAR PURPOSE OR NON-INFRINGEMENT OF THIRD PARTY INTELLECTUAL PROPERTY RIGHTS (AND THEIR EQUIVALENTS UNDER THE LAWS OF ANY JURISDICTION).

2. The Information contained herein is for informational purpose only and is provided only to illustrate the operation of Diodes' products described herein and application examples. Diodes does not assume any liability arising out of the application or use of this document or any product described herein. This document is intended for skilled and technically trained engineering customers and users who design with Diodes' products. Diodes' products may be used to facilitate safety-related applications; however, in all instances customers and users are responsible for (a) selecting the appropriate Diodes products for their applications, (b) evaluating the suitability of Diodes' products for their intended applications, (c) ensuring their applications, which incorporate Diodes' products, comply the applicable legal and regulatory requirements as well as safety and functional-safety related standards, and (d) ensuring they design with appropriate safeguards (including testing, validation, quality control techniques, redundancy, malfunction prevention, and appropriate treatment for aging degradation) to minimize the risks associated with their applications.

3. Diodes assumes no liability for any application-related information, support, assistance or feedback that may be provided by Diodes from time to time. Any customer or user of this document or products described herein will assume all risks and liabilities associated with such use, and will hold Diodes and all companies whose products are represented herein or on Diodes' websites, harmless against all damages and liabilities.

4. Products described herein may be covered by one or more United States, international or foreign patents and pending patent applications. Product names and markings noted herein may also be covered by one or more United States, international or foreign trademarks and trademark applications. Diodes does not convey any license under any of its intellectual property rights or the rights of any third parties (including third parties whose products and services may be described in this document or on Diodes' website) under this document.

5. Diodes' products are provided subject to Diodes' Standard Terms and Conditions of Sale (https://www.diodes.com/about/company/terms-and-conditions/terms-and-conditions-of-sales/) or other applicable terms. This document does not alter or expand the applicable warranties provided by Diodes. Diodes does not warrant or accept any liability whatsoever in respect of any products purchased through unauthorized sales channel.

6. Diodes' products and technology may not be used for or incorporated into any products or systems whose manufacture, use or sale is prohibited under any applicable laws and regulations. Should customers or users use Diodes' products in contravention of any applicable laws or regulations, or for any unintended or unauthorized application, customers and users will (a) be solely responsible for any damages, losses or penalties arising in connection therewith or as a result thereof, and (b) indemnify and hold Diodes and its representatives and agents harmless against any and all claims, damages, expenses, and attorney fees arising out of, directly or indirectly, any claim relating to any noncompliance with the applicable laws and regulations, as well as any unintended or unauthorized application.

7. While efforts have been made to ensure the information contained in this document is accurate, complete and current, it may contain technical inaccuracies, omissions and typographical errors. Diodes does not warrant that information contained in this document is error-free and Diodes is under no obligation to update or otherwise correct this information. Notwithstanding the foregoing, Diodes reserves the right to make modifications, enhancements, improvements, corrections or other changes without further notice to this document and any product described herein. This document is written in English but may be translated into multiple languages for reference. Only the English version of this document is the final and determinative format released by Diodes.

8. Any unauthorized copying, modification, distribution, transmission, display or other use of this document (or any portion hereof) is prohibited. Diodes assumes no responsibility for any losses incurred by the customers or users or any third parties arising from any such unauthorized use.

9. This Notice may be periodically updated with the most recent version available at https://www.diodes.com/about/company/terms-and-conditions/important-notice

DIODES is a trademark of Diodes Incorporated in the United States and other countries.
The Diodes logo is a registered trademark of Diodes Incorporated in the United States and other countries.
© 2022 Diodes Incorporated. All Rights Reserved.

www.diodes.com

© 2022 Copyright Diodes Incorporated. All Rights Reserved.