chanhvinh.com

Lead-free Green

AP3981B

PRIMARY SIDE REGULATED POWER SWITCHER

NEW PRODUCT

Description

The AP3981B is a high performance power switcher integrated with a primary side regulation controller and an N-channel power MOSFET. It can be used for battery charger and adaptor applications, accurate Constant Voltage (CV) and Constant Current (CC) can be achieved without an opto-coupler and secondary control circuitry.

The AP3981B operates in Pulse Frequency Modulation (PFM) mode and peak current Amplitude Modulation (AM) mode to form a fine tune frequency curve within the whole power range. Therefore, the AP3981B can achieve high average efficiency and improve audible noise.

The AP3981B provides comprehensive protections without additional circuitry. It contains V_{CC} over voltage protection, output over voltage protection, output under voltage protection, output short circuit protection, cycle-by-cycle current limit, open loop protection, and internal OTP, etc.

The AP3981B is available in SO-7 package.

Pin Assignments

(Top View)

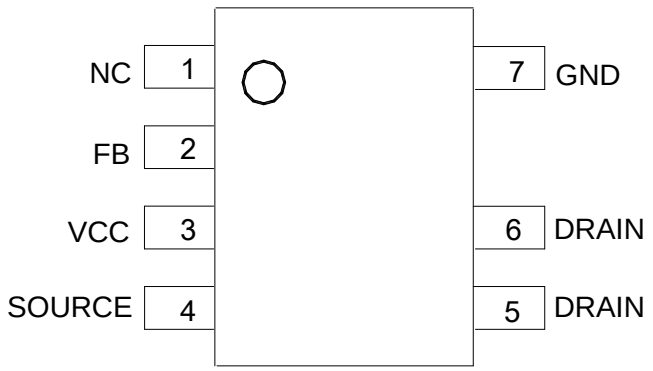

SO-7

Features

- Primary-Side Control for Eliminating Opto-Coupler
- Built-In 650V Power MOSFET
- 75mW No-Load Input Power
- Flyback Topology in DCM Operation
- External Adjustable Line Compensation for CC
- Fixed Internal Cable Compensation
- Multiple Segment AM/PFM Control Mode to Improve Audio Noise and Efficiency
- Frequency Jitter to Improve System EMI
- Capacitive Load Start-Up Capability
- Valley-On for the Higher Efficiency and Better EMI Behavior
- Multiple Protections:
  - Secondary-Side Over Voltage Protection (SOVP)
  - Secondary-Side Under Voltage Protection (SUVP)
  - Output Short Circuit Protection (SCP)
  - Transformer Saturation Protection (TSP) via Primary Peak Current Limitation
  - Internal Over Temperature Protection (OTP)
- SO-7 Package
- The Recommended Output Power is up to 7.5W
- **Totally Lead-Free & Fully RoHS Compliant (Notes 1 & 2)**
- **Halogen and Antimony Free. "Green" Device (Note 3)**

Applications

- Routers
- Set-Top Box (STB) Power Supply
- Network Adaptors

Notes:
1. No purposely added lead. Fully EU Directive 2002/95/EC (RoHS), 2011/65/EU (RoHS 2) & 2015/863/EU (RoHS 3) compliant.
2. See https://www.diodes.com/quality/lead-free/ for more information about Diodes Incorporated's definitions of Halogen- and Antimony-free, "Green" and Lead-free.
3. Halogen- and Antimony-free "Green" products are defined as those which contain <900ppm bromine, <900ppm chlorine (<1500ppm total Br + Cl) and <1000ppm antimony compounds.

© Diodes Incorporated

chanhvinh.com

NEW PRODUCT

Typical Applications Circuit

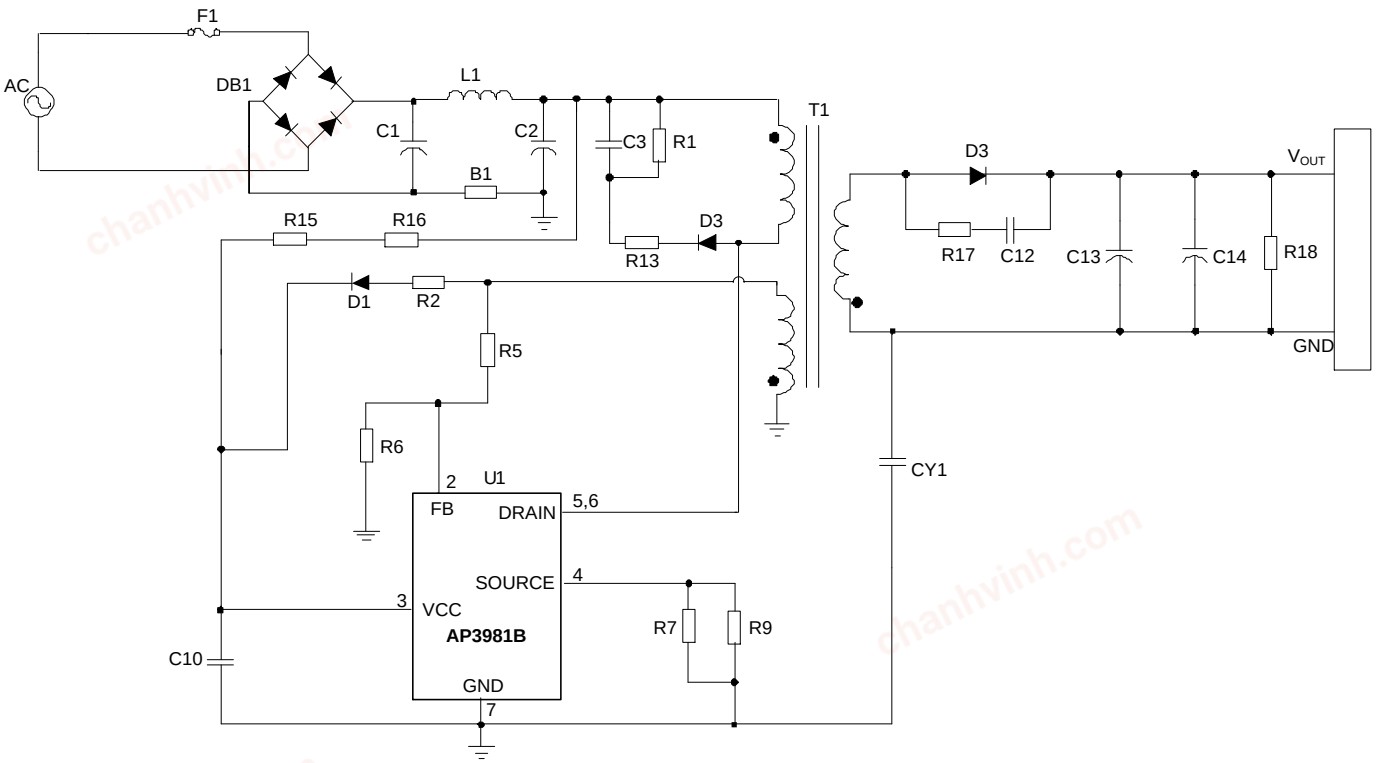

Pin Descriptions

Pin Number	Pin Name	Function
1	NC	No Connection
2	FB	Connect to the auxiliary winding through a divider network, used as a multi-function pin to realize output voltage sample for CV control, t_{ONS} detection for CC control, line voltage sense for line compensation, and FB-negative-protection detection as well.
3	VCC	The power supply of the IC
4	SOURCE	SOURCE terminal of the integrated MOSFET
5, 6	DRAIN	DRAIN terminal of the integrated MOSFET
7	GND	The ground of the IC

© Diodes Incorporated

chanhvinh.com

NEW PRODUCT

Functional Block Diagram

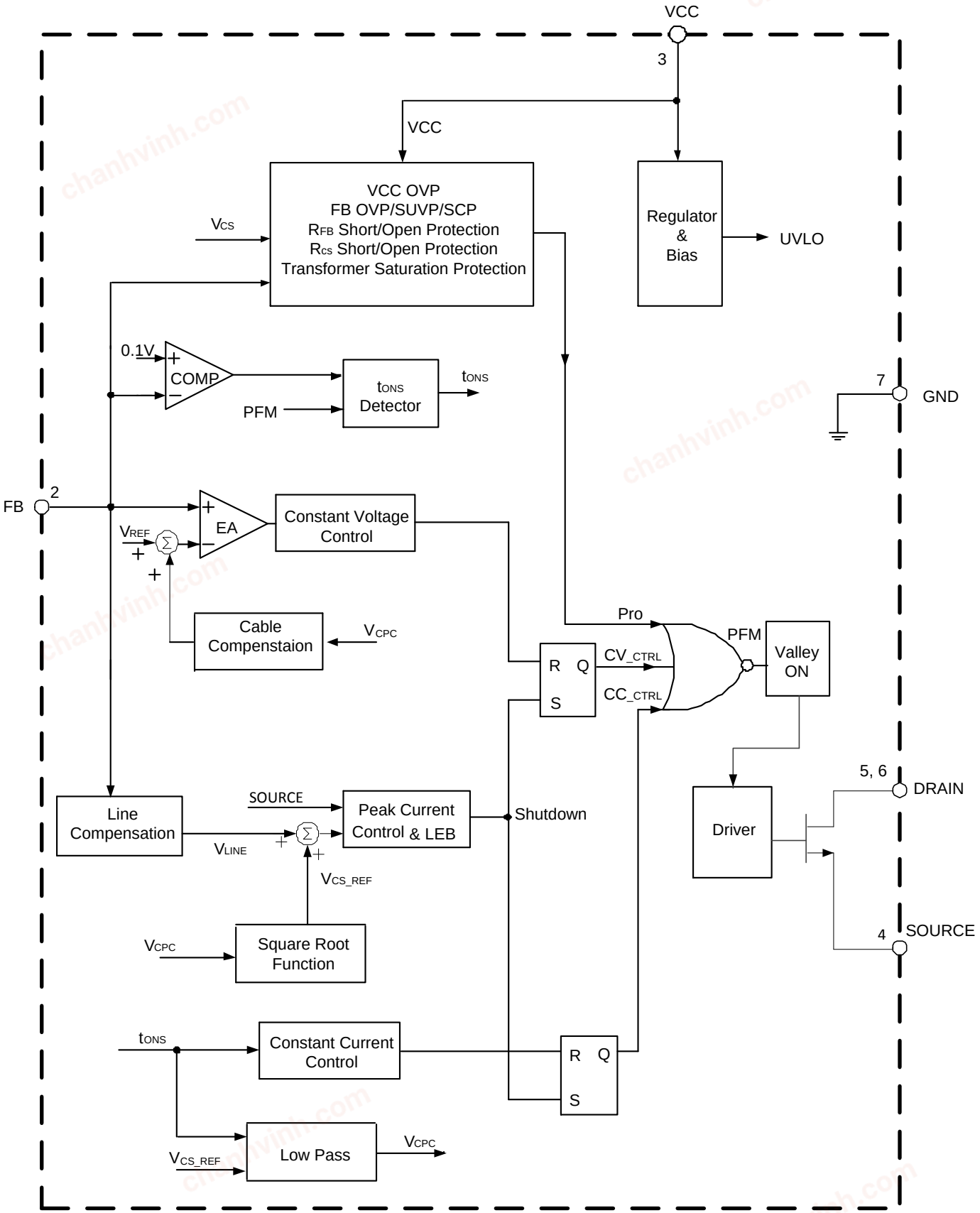

© Diodes Incorporated

chanhvinh.com

NEW PRODUCT

Absolute Maximum Ratings (Note 4)

Symbol	Parameter	Rating	Unit
V_{CC}	Supply Voltage	-0.3 to 35	V
V_{SOURCE}	SOURCE Input Voltage	-0.3 to 8	V
V_{FB}	FB Input Voltage	-0.3 to 8	V
V_{DS}	Drain-Source Voltage (T_J = +25°C)	650	V
T_J	Operating Junction Temperature	-40 to +150	°C
T_{STG}	Storage Temperature	-65 to +150	°C
T_{LEAD}	Lead Temperature (Soldering, 10s)	+300	°C
θ_{JC}	Thermal Resistance (Junction to Case) (Note 5)	3	°C/W
θ_{JA}	Thermal Resistance (Junction to Ambient) (Note 5)	77	°C/W
—	ESD (Human Body Model)	2000	V
—	ESD (Charged Device Model)	1000	V

Notes: 4. Stresses greater than those listed under *Absolute Maximum Ratings* can cause permanent damage to the device. These are stress ratings only, and functional operation of the device at these or any other conditions beyond those indicated under *Recommended Operating Conditions* is not implied. Exposure to *Absolute Maximum Ratings* for extended periods can affect device reliability.

5. Test condition: Device mounted on FR-4 substrate PC board, 2oz copper, with 1inch^2 cooling area.

Recommended Operating Conditions

Symbol	Parameter	Min	Max	Unit
V_{CC}	Supply Voltage	10	28	V
T_A	Ambient Temperature	-40	+85	°C

© Diodes Incorporated

chanhvinh.com

NEW PRODUCT

Electrical Characteristics (@T_A =+25°C, V_{CC} = 15V, unless otherwise specified.)

Symbol	Parameter	Condition	Min	Typ	Max	Unit
STARTUP AND UVLO SECTION						
V_{TH_ST}	Startup Threshold	—	14.5	16	17.5	V
$V_{OPR(MIN)}$	Minimum Operating Voltage	—	6.1	6.8	7.5	V
STANDBY CURRENT SECTION						
I_{ST}	Startup Current	V_{CC}=V_{TH_ST}-1V before Startup	—	1	3	μA
I_{CC_OPR}	Minimum Operating Current	Static Current	450	550	650	μA
CURRENT SENSE SECTION						
V_{CS_H}	Peak Current Sense Threshold Voltage	40% to 100% CC Load	560	630	700	mV
V_{CS_L}		No Load to 2% CC Load	160	180	200	mV
R_{LINE}	Built-In Line Compensation Resistor	—	45	55	65	Ω
t_{LEB}	Leading Edge Blanking	—	330	420	510	ns
CONSTANT VOLTAGE SECTION						
V_{FB}	Feedback Threshold Voltage	Closed Loop Test of V_{OUT}	2.35	2.4	2.45	V
$Ratio_{SAMPLE_L}$	Sample Ratio	No Load to 2% CC Load	45	50	55	%
$Ratio_{SAMPLE_H}$	Sample Ratio	40% to 100% CC Load	75	80	85	%
CONSTANT CURRENT SECTION						
t_{ONS}/t_{SW}	Below SUVP	Tested @ V_{FB}=1V	—	0.75	—	—
	Above SUVP	Tested @ V_{FB}=2V	—	0.5	—	—
FREQUENCY JITTER						
$\Delta V_{CS}/V_{CS}$	V_{CS} Modulation	10% Load to Full Load	1.5	2	2.5	%
CABLE COMPENSATION						
V_{CABLE}/ V_{OUT}	Fixed Cable Compensation Ratio	—	—	4	—	%
VALLEY-ON SECTION						
t_{VAL-ON}	Valid Off Time of Valley-On	From the End of t_{ONS}	26	32	38	μs
DYNAMIC SECTION						
$t_{OFF(MAX)}$	Maximum Off Time	—	1.35	1.5	1.65	ms
PROTECTION FUNCTION SECTION						
$V_{FB(SOVP)}$	Over Voltage Protection at FB Pin	—	3.3	3.6	3.9	V
$V_{FB(SUVP)}$	Under Voltage Protection at FB Pin	—	1.22	1.35	1.48	V
$t_{DELAY(SUVP)}$	Delay Time of SUVP	—	116	128	140	ms
$V_{FB(SCP)}$	Output Short Protection at FB Pin	—	680	750	820	mV
$t_{DELAY(SCP)}$	Delay Time of SCP	—	58	64	70	ms
$V_{CC(OVP)}$	Over Voltage Protection at VCC Pin	—	29.5	32	34.5	V
$t_{ONP(MAX)}$	Maximum Turn-on Time	—	12	16	20	μs
$V_{CS(MIN)}$	Minimum Peak Current Sense Voltage at t_{ONP} = 4μs	—	120	150	180	mV
$V_{CS(MAX)}$	Maximum CS Voltage	—	720	800	880	mV

© Diodes Incorporated

chanhvinh.com

NEW PRODUCT

Electrical Characteristics (continued) (@T_A =+25°C, V_{CC} = 15V, unless otherwise specified.)

Symbol	Parameter	Condition	Min	Typ	Max	Unit
PROTECTION FUNCTION SECTION						
$V_{FB_NEG_L}$	Low Threshold for FB Negative Voltage Protection	—	11	14	17	mV
$V_{FB_NEG_H}$	High Threshold for FB Negative Voltage Protection	—	27	36	45	mV
T_{OTP}	Shutdown Temperature	—	+125	+140	+155	°C
T_{HYS}	Temperature Hysteresis	—	+27	+30	+33	°C
POWER MOSFET SECTION						
BV_{DSS}	Integrated MOSFET Drain-Source Break-Down Voltage (Note 6)	—	650	—	—	V
$R_{DS(ON)}$	Static Drain-Source On-Resistance	—	—	7.8	9.3	Ω
I_D	Continuous Drain Current	—	—	—	1.5	A

Note： 6. The aging condition of drain-source voltage is 80% of BV_{DSS}.

© Diodes Incorporated

chanhvinh.com

NEW PRODUCT

Performance Characteristics

Start-Up Voltage vs. Ambient Temperature

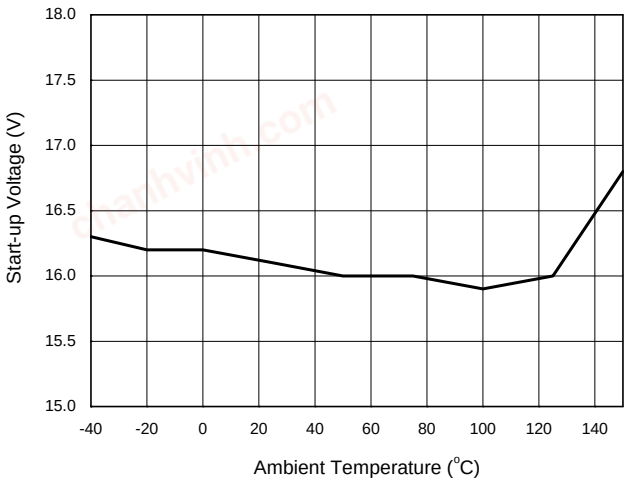

Start-Up Current vs. Ambient Temperature

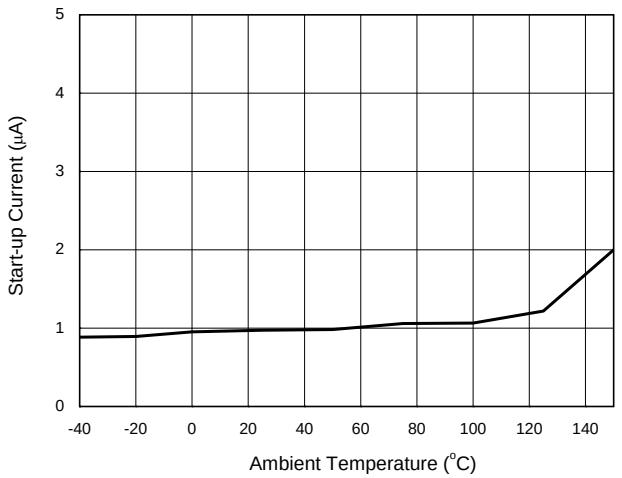

Minimal Operating Voltage vs. Ambient Temperature

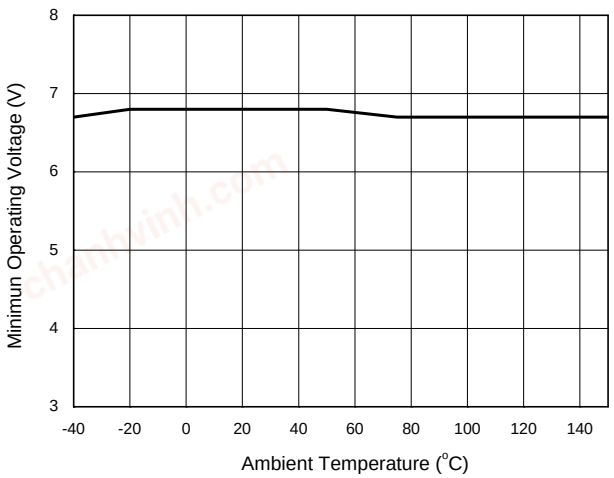

Operating Current vs. Ambient Temperature

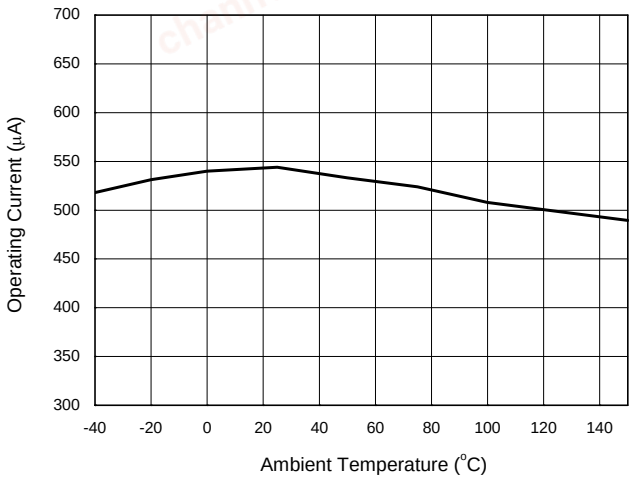

V_{CS_H} vs. Ambient Temperature

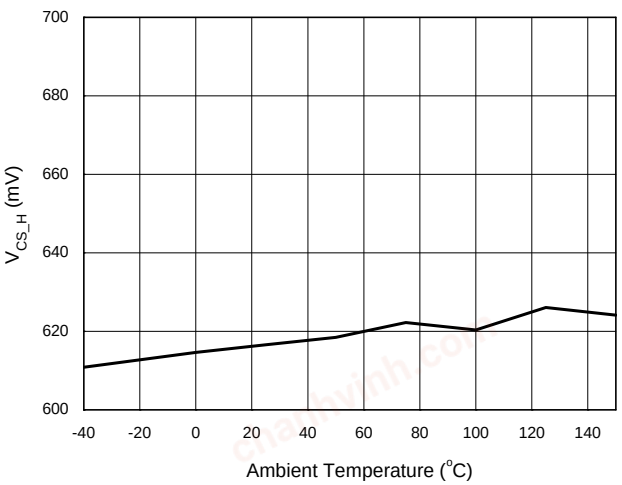

t_{ONS}/t_{SW} Above SUVP vs. Ambient Temperature

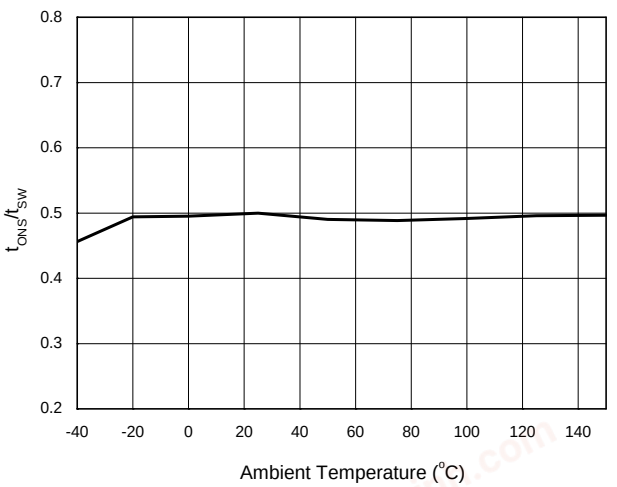

© Diodes Incorporated

chanhvinh.com

NEW PRODUCT

Performance Characteristics (continued)

Feedback Voltage vs. Ambient Temperature

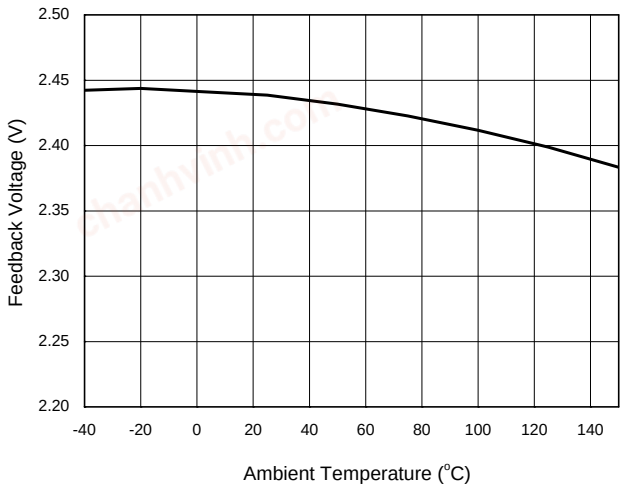

V_{CC} OVP Voltage vs. Ambient Temperature

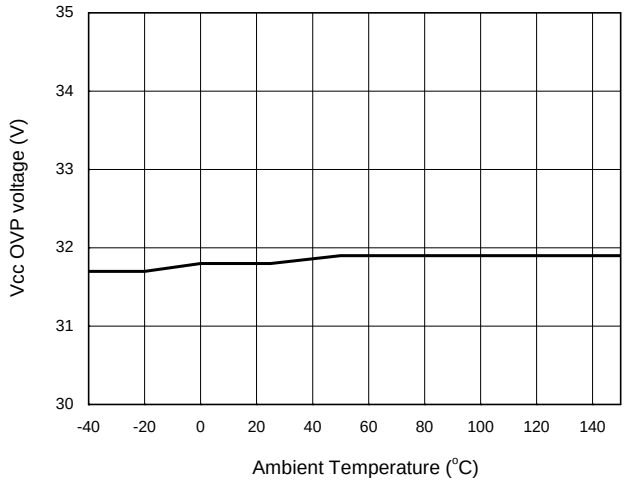

Line Compensation Resistance vs. Ambient Temperature

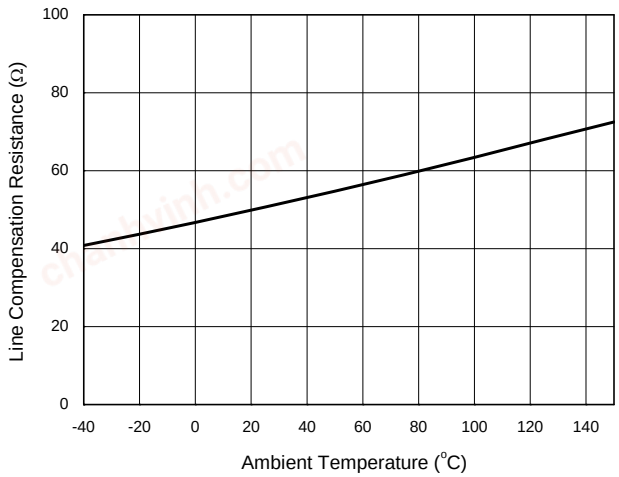

Maximum Off Time vs. Ambient Temperature

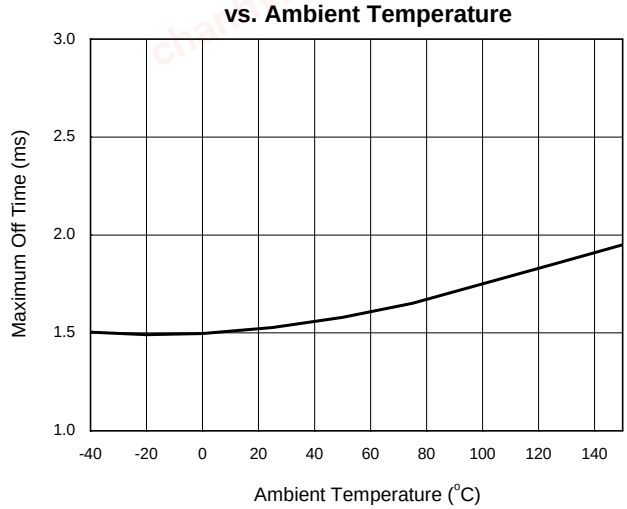

Low Threshold Voltage for FB Negative Protection vs. Ambient Temperature

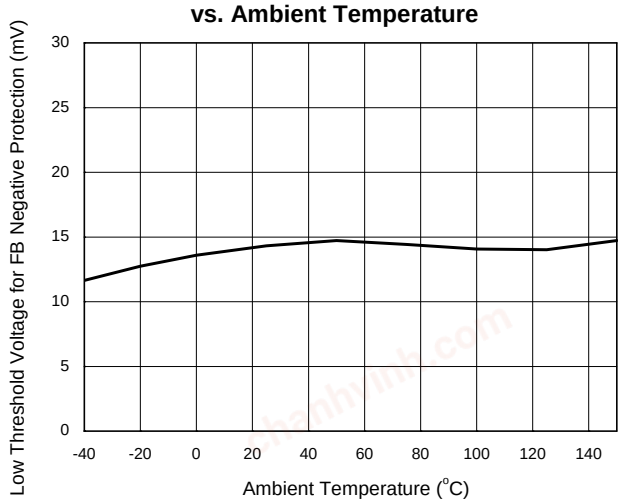

Feedback Voltage of SUVP vs. Ambient Temperature

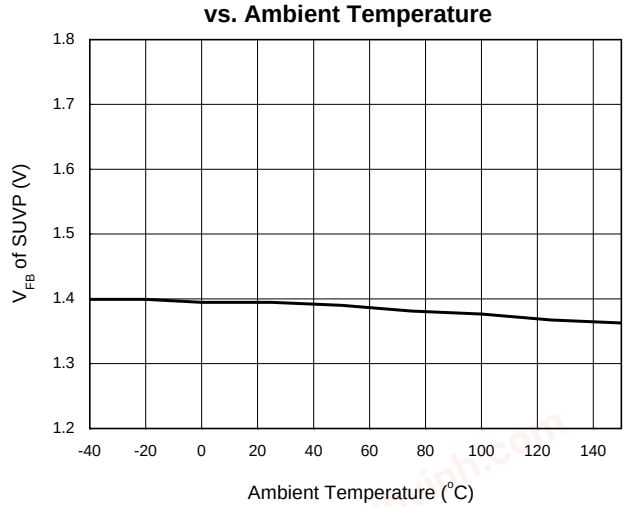

© Diodes Incorporated

chanhvinh.com

NEW PRODUCT

Operation Principle Description

1. The Conventional PSR Operating Waveforms

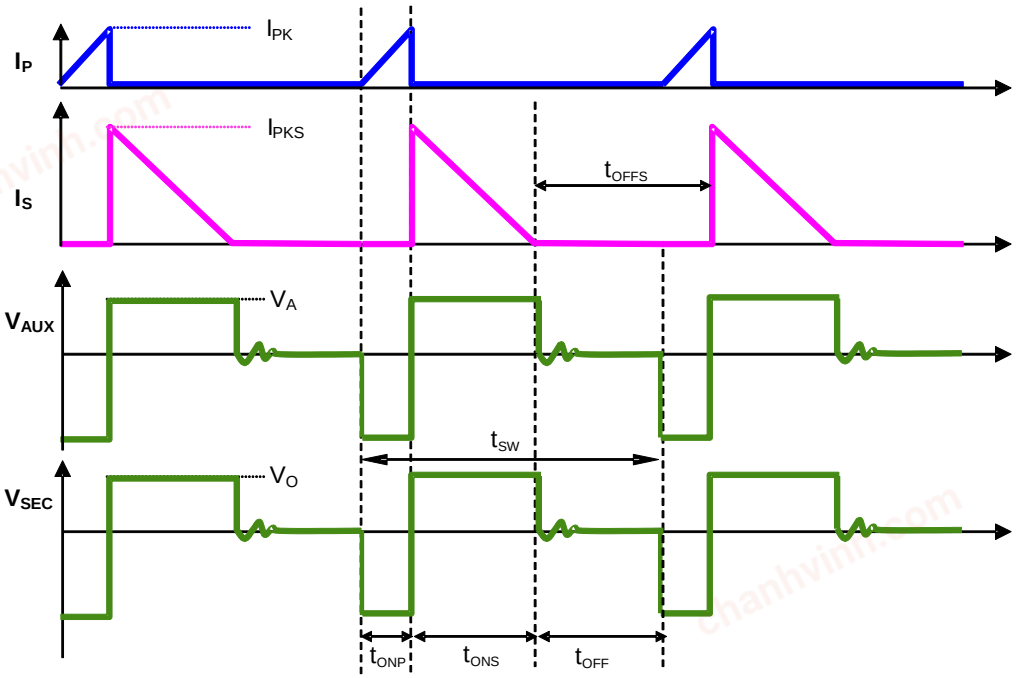

Figure 1. The Operation Waveform of Flyback PSR System

Figure 1 shows the typical waveforms which demonstrate the basic operating principle of AP3981B application. And the parameters are defined as following:

I_P---The primary-side current
I_S ---The secondary-side current
I_{PK}---Peak value of primary-side current
I_{PKS}---Peak value of secondary-side current
V_{SEC}---The transient voltage at secondary winding
V_O---The output voltage
V_{AUX}---The transient voltage at auxiliary winding
V_A--- The stable voltage at auxiliary winding when rectification diode is in conducting status, which equals the sum of voltage V_{CC} and the forward voltage drop of auxiliary diode
t_{SW} ---The period of switching frequency
t_{ONP} ---The conduction time when primary-side switch is “ON”
t_{ONS} ---The conduction time when secondary-side diode is “ON”
t_{OFF} ---The dead time when neither primary-side switch nor secondary-side diode is “ON”
t_{OFFS} --- The time when secondary-side diode is “OFF”

For primary-side regulation, the primary current ip(t) is sensed by a current sense resistor R_{CS} connected to SOURCE pin. The current rises up linearly at a rate of:

$$\frac{dip(t)}{dt} = \frac{V_{IN}(t)}{L_M} \quad (1)$$

As illustrated in Figure 1, when the current ip(t) rises up to I_{PK}, the primary MOSFET will turn off. The constant peak current is given by:

$$I_{PK} = \frac{V_{CS}}{R_{CS}} \quad (2)$$

© Diodes Incorporated

chanhvinh.com

NEW PRODUCT

Operation Principle Description (continued)

The energy stored in the magnetizing inductance L_M each cycle is therefore:

$$Eg = \frac{1}{2} \times L_M \cdot I_{PK}^{\ 2} \quad (3)$$

So the power transferring from the input to the output is given by:

$$P = \frac{1}{2} \times L_M \times I_{PK}^{\ 2} \times f_{SW} \quad (4)$$

Where, the f_{SW} is the switching frequency. When the peak current I_{PK} is constant, the output power will depend on the switching frequency f_{SW}.

2. Constant Voltage Operation

The output voltage is proportional to the auxiliary winding voltage during t_{ONS} period indicated by Formula 5, this auxiliary winding voltage is divided by resistors R_{FB1} and R_{FB2} (refer to Figure 5) before inputting to the FB pin. As Figure 2 illustrated, the AP3981B detects the FB voltage at the end of t_{SAMPLE} during t_{ONS} period, and the detected voltage which reflects the output voltage is regulated to V_{FB} of 2.4V with the help of the constant voltage control block in AP3981B. For system design, adjusting the ratio of R_{FB1} and R_{FB2} can get the target output voltage value.

$$V_{AUX} = \frac{N_{AUX}}{N_S} \times (Vo + Vd) \quad (5)$$

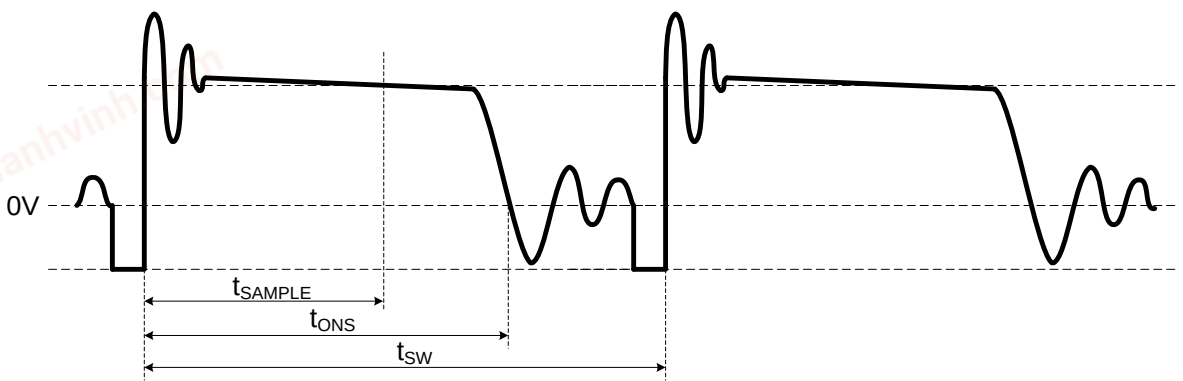

Figure 2. Auxiliary Voltage Waveform

3. Constant Current Control

In the AP3981B, Formula 6 shows the related parameters that determine the output current. To get a constant output current, the V_{CS} and t_{ONS}/t_{SW} is fixed in AP3981B during CC mode. Meanwhile, a reliable control logic is integrated within AP3981B to ensure the system swift smoothly between CC mode and CV mode.

$$I_{OUT} = \frac{1}{2} * \frac{Np}{Ns} * Ipk * \frac{t_{ONS}}{t_{SW}} = \frac{1}{2} * \frac{Np}{Ns} * \frac{Vcs}{Rcs} * \frac{t_{ONS}}{t_{SW}} \quad (6)$$

4. Multiple Segment Peak Current

In the original PFM PSR system, the switching frequency decreases with the decreasing output current, which will encounter audible noise issue when switching frequency decreases below 20kHz.

In order to avoid audible noise issue and a big drop in efficiency at light load, the AP3981B uses a 3-segment primary peak current control method at CV mode, the current sense threshold voltage is piecewise defined. As shown in Figure 3, the low threshold V_{CS_L} is set under 2% CC load, while the high threshold V_{CS_H} is set above 40% CC load. Within the range from 2% to 40%, the threshold V_{CS_M} increases based on the load condition, the V_{CS_M} is carefully calculated inside AP3981B to make the system operate at a reasonable switching frequency which rises above 20kHz at a varying slope.

© Diodes Incorporated

chanhvinh.com

NEW PRODUCT

Operation Principle Description (continued)

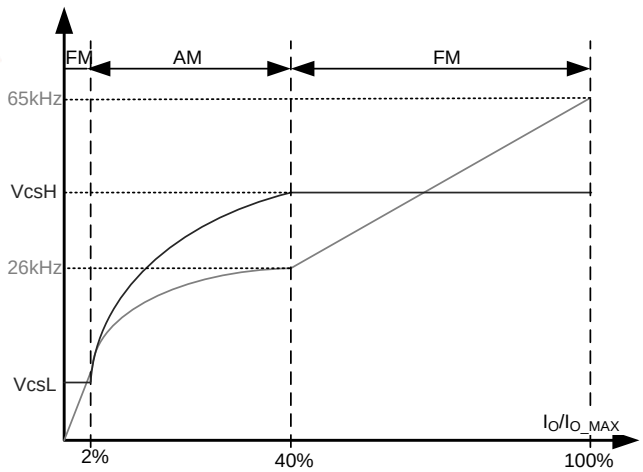

Figure 3. Segment Peak Current and Operating Frequency at CV Mode

5. Sample Time

As shown in Equation 5 and Figure 2, the detected auxiliary voltage reflects the output voltage. To be compatible with different system designs and avoid the turn-off ringing voltage influence on CV sampling, the t_{SAMPLE} is designed to be proportional of t_{ONS}. On the other hand, to alleviate the Vd effect on the accuracy of V_{OUT}, the sample ratio of t_{SAMPLE} to t_{ONS} varies according to load condition. The t_{SAMPLE} is usually 50% of t_{ONS} for the below 2% CC load conditions, and 80% of t_{ONS} for the above 40% CC load conditions. Within the range from 2% to 40% loading, the sample ratio rises linearly from 50% to 80%.

6. Capacitive Load Start-Up Capability

In order to achieve fast start-up for capacitive load startup applications, the AP3981B induces a two-level CC point design during startup time. The output voltage rises after power on, when the detected output voltage is lower than SUVP point, the t_{ONS}/t_{SW} is set to be 0.75, which means output constant current is 1.5 times of normal output constant current. When the output voltage rises above SUVP point, the t_{ONS}/t_{SW} is switched to the normal value of 0.5.

7. Leading Edge Blanking

When the power switch is turned on, a turn-on spike voltage will occur on the V_{CS} sense resistor. To avoid false-termination of the switching pulse, a fixed 420ns leading-edge blanking time is built in. During this blanking period, the current sense comparator is disabled and the primary MOSFET cannot be turned off.

8. Valley Turn-On

When the off time (t_{OFF}) is shorter than t_{VAL-ON}, the AP3981B power system can work with valley turn-on. It can reduce the switch-on power losses and achieve high overall efficiency. At the same time, because of valley turn-on, the switching frequency has the random jitter feature, which will be of benefit to conductive EMI performance. The valley turn-on can also reduce the power switch turn-on spike current and then achieve the better radiative EMI performance.

9. V_{CS} Jitter

Even though the valley turn-on function produces the random frequency jitter feature, an active frequency jitter function is added in the AP3981B. The active frequency dithering is realized by applying variation on V_{CS} reference (V_{CS_REF}). The V_{CS_REF} is changed every 2 cycles and the period of variation is 12 cycles, which is shown as Figure 4. The variation between V_{CS4} and V_{CS1} is +/-2% using the mean level as a reference.

© Diodes Incorporated

chanhvinh.com

NEW PRODUCT

Operation Principle Description (continued)

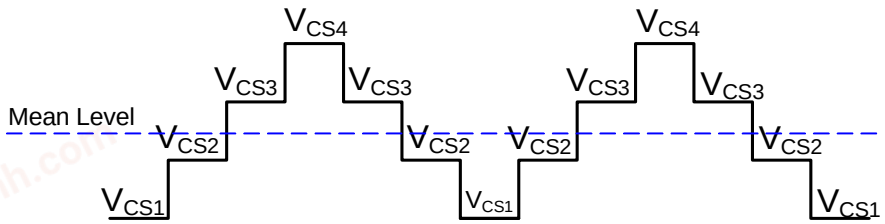

Figure 4. V_{CS} Jitter

10. Adjustable Line Compensation

In real system, there exists a delay time, from the V_{SOURCE} reach the inner V_{CS} threshold to the actual switch turn-off point. The delay time contains the propagation time of the inner comparator and the driver delay, and it does not change with line voltage. The delay time leads to different primary peak current under different line voltage, which results in different output current in CC mode.

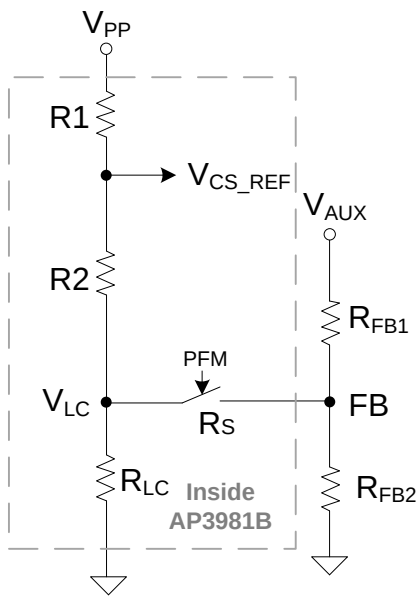

Figure 5. Line Compensation Control Circuit

In order to alleviate the difference under the universal input voltage, the AP3981B integrates the line compensation control circuit shown as Figure 5. During the primary on stage, an inner switcher R_S switches on, and the R_{LC} is much smaller compared with R_{FB2}, so the R_{FB2}'s effect on line compensation can be neglected, the proportional line voltage is detected through R_{FB1} and R_{LC}, and is added to the V_{CS} threshold (V_{CS_REF}). The V_{LC} can be derived from the Formula 7:

$$V_{LC} = \frac{\frac{R_{FB1}}{3*R2} * V_{PP} - V_{AUX}}{1 + \frac{R_{FB1}}{3*R2} + \frac{R_{FB1}}{R_{LC}}} \quad (7)$$

The final compensated V_{CS} is:

$$V_{CS_REF} = \frac{1}{3} * V_{PP} + \frac{2}{3} * V_{LC} \quad (8)$$

In the above formulas, V_{PP} is 1.8V at CC mode, R_{LC} is 55Ω, R2 is 60kΩ, R1 is two times of R2, V_{AUX} is the value of auxiliary winding voltage during primary-on period and it is proportional to bus voltage. Based on the formula, we can make a conclusion that a smaller R_{FB1} results in deeper line compensation. If we know the delay time, t_{DELAY}, typically 150ns in AP3981B, we can calculate the R_{FB1} as a reference for the system design.

© Diodes Incorporated

chanhvinh.com

NEW PRODUCT

Operation Principle Description (continued)

11. Protection

The AP3981B provides versatile protections to prevent the system from damage under various fault conditions. Most protections will trigger auto-recovery mode in which the system will restart as soon as the V_{CC} drops to $V_{OPR(MIN)}$, when the fault conditions are removed, the system will recover to normal operation automatically.

V_{CC} OVP

A V_{CC} OVP threshold is set to protect the IC from damage. When the V_{CC} OVP protection is triggered, the IC will stop outputting drive signal immediately and the system will enter auto-recovery mode.

Secondary-Side Over Voltage Protection (SOVP)

As it described above that the FB pin voltage during t_{ONS} reflects the output voltage proportionally, this voltage can be used to realize SOVP. The AP3981B set a higher threshold, $V_{FB(OVP)}$, to shut down the system if the sampled voltage reaches the threshold continuously for 3 switching cycles, the SOVP will be triggered and the system will enter auto-recovery mode.

Secondary-Side Under Voltage Protection (SUVP)

Like SOVP, the AP3981B also integrates the SUVP protection. If the detected voltage on FB pin is lower than $V_{FB(SUVP)}$ for 128ms, the SOVP will be triggered and the system will enter auto-recovery mode.

Output Short Protection (SCP)

A much lower threshold is set on FB pin to protect the system when output short condition occurs. If the detected FB voltage is lower than 0.78V for 64ms, the SCP will be triggered and the system will enter auto-recovery mode.

Transformer Anti-Saturation Protection

Under some fault conditions or bad system design, the transformer may approach saturation and the current increases dramatically. To avoid power device damage since of transformer saturation, the AP3981B integrated a maximum V_{CS} threshold $V_{CS(MAX)}$ to protect the system. If there are 3 consecutive pulses where V_{CS} exceeds the threshold, the controller will shut down and enter auto-recovery mode.

Over Temperature Protection (OTP)

If the IC junction temperature exceeds the threshold of T_{OTP}, the AP3981B will shut down immediately and enter auto-recovery mode. Note that even when the V_{CC} reaches V_{TH_ST}, the IC will not output any drive pulse until the junction temperature falls of a hysteresis temperature of +30°C.

Brown In / Brown Out Protection

The AP3981B detects the bus voltage at each switching cycle through FB pin during t_{ONP} period. When the V_{CC} reaches V_{TH_ST} after power-on, the AP3981B will output one switching pulse to check if the detected bus voltage on FB pin is higher than $V_{FB_NEG_H}$. If so, the system will start up normally, otherwise AP3981B will stop outputting following pulses, then the V_{CC} will drop below $V_{OPR(MIN)}$ and the system will repeat the process described above until the detected FB voltage is higher than $V_{FB_NEG_H}$. When the power is off or there is a ditch in bus voltage, if the detected voltage is lower than $V_{FB_NEG_L}$ for 3 consecutive switching cycles, the IC will shut down and enter auto-recovery mode. This function is very useful when the bulk capacitor is open, or when the heavy load is suddenly released after power off.

© Diodes Incorporated

chanhvinh.com

NEW PRODUCT

Ordering Information

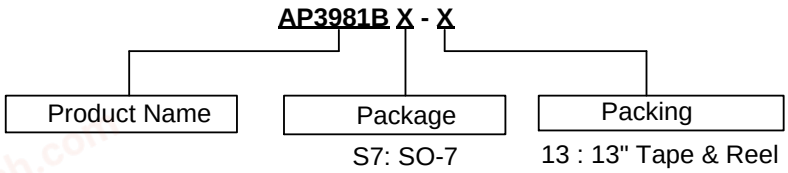

Package	Part Number	Marking ID	13"Tape and Reel	
			Quantity	Part Number Suffix
SO-7	AP3981BS7-13	3981B	4000/Tape and Reel	-13

Marking Information

Package Name: SO-7

(Top View)

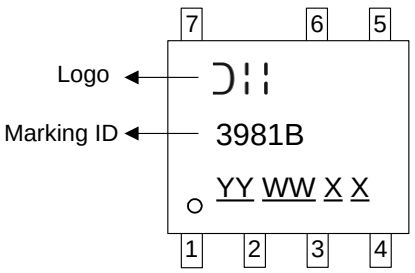

YY : Year : 18, 19, 20 ~
WW : Week : 01~52; 52 represents 52 and 53 week
X X : Internal Code

© Diodes Incorporated

chanhvinh.com

NEW PRODUCT

Package Outline Dimensions (All dimensions in mm (inch).)

(1) Package Type: SO-7

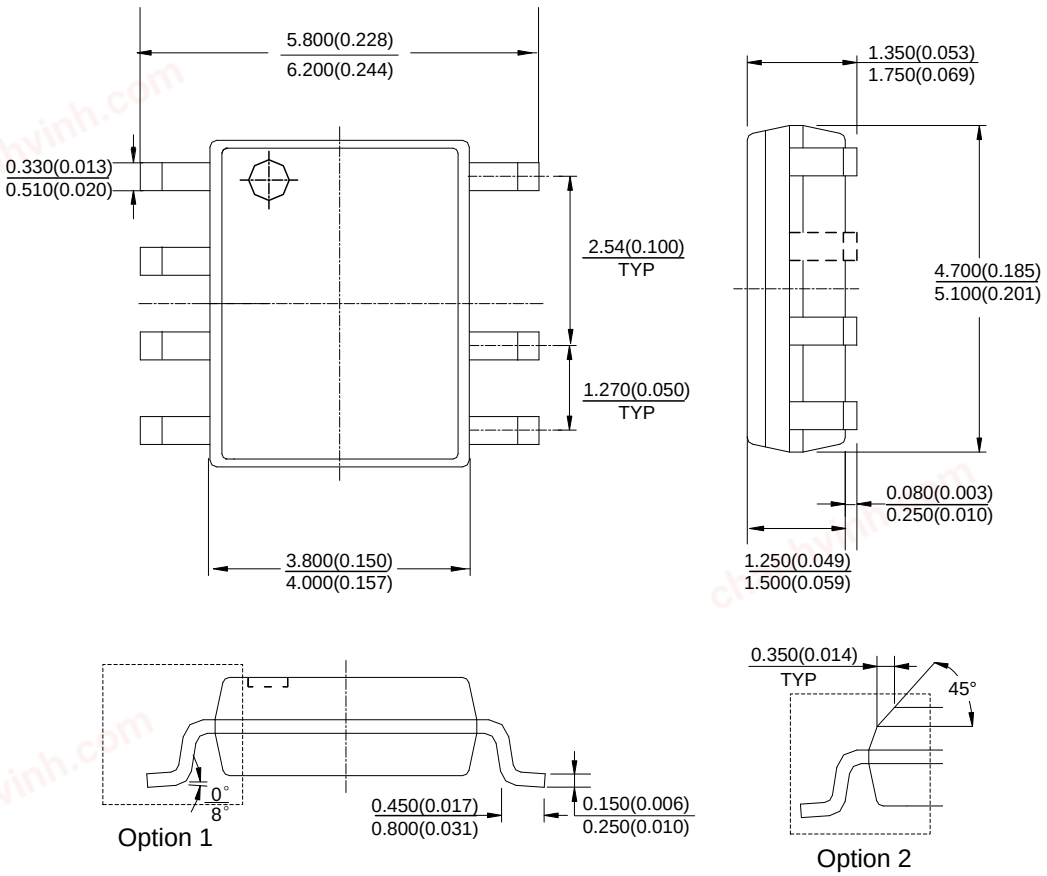

Note: Eject hole, oriented hole and mold mark is optional.

© Diodes Incorporated

chanhvinh.com

NEW PRODUCT

Suggested Pad Layout

(1) Package Type: SO-7

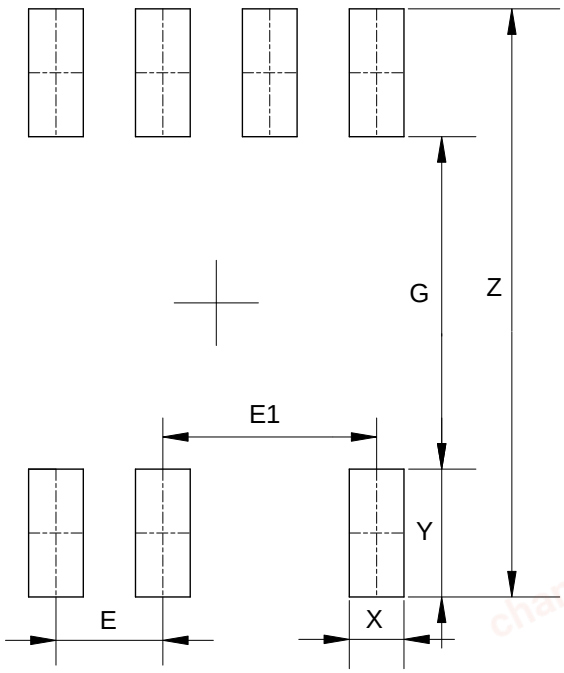

Dimensions	Z (mm)/(inch)	G (mm)/(inch)	X (mm)/(inch)	Y (mm)/(inch)	E (mm)/(inch)	E1 (mm)/(inch)
Value	6.900/0.272	3.900/0.154	0.650/0.026	1.500/0.059	1.270/0.050	2.540/0.100

© Diodes Incorporated

chanhvinh.com

NEW PRODUCT

IMPORTANT NOTICE

DIODES INCORPORATED MAKES NO WARRANTY OF ANY KIND, EXPRESS OR IMPLIED, WITH REGARDS TO THIS DOCUMENT, INCLUDING, BUT NOT LIMITED TO, THE IMPLIED WARRANTIES OF MERCHANTABILITY AND FITNESS FOR A PARTICULAR PURPOSE (AND THEIR EQUIVALENTS UNDER THE LAWS OF ANY JURISDICTION).

Diodes Incorporated and its subsidiaries reserve the right to make modifications, enhancements, improvements, corrections or other changes without further notice to this document and any product described herein. Diodes Incorporated does not assume any liability arising out of the application or use of this document or any product described herein; neither does Diodes Incorporated convey any license under its patent or trademark rights, nor the rights of others. Any Customer or user of this document or products described herein in such applications shall assume all risks of such use and will agree to hold Diodes Incorporated and all the companies whose products are represented on Diodes Incorporated website, harmless against all damages.

Diodes Incorporated does not warrant or accept any liability whatsoever in respect of any products purchased through unauthorized sales channel. Should Customers purchase or use Diodes Incorporated products for any unintended or unauthorized application, Customers shall indemnify and hold Diodes Incorporated and its representatives harmless against all claims, damages, expenses, and attorney fees arising out of, directly or indirectly, any claim of personal injury or death associated with such unintended or unauthorized application.

Products described herein may be covered by one or more United States, international or foreign patents pending. Product names and markings noted herein may also be covered by one or more United States, international or foreign trademarks.

This document is written in English but may be translated into multiple languages for reference. Only the English version of this document is the final and determinative format released by Diodes Incorporated.

LIFE SUPPORT

Diodes Incorporated products are specifically not authorized for use as critical components in life support devices or systems without the express written approval of the Chief Executive Officer of Diodes Incorporated. As used herein:

A. Life support devices or systems are devices or systems which:

1. are intended to implant into the body, or
2. support or sustain life and whose failure to perform when properly used in accordance with instructions for use provided in the labeling can be reasonably expected to result in significant injury to the user.

B. A critical component is any component in a life support device or system whose failure to perform can be reasonably expected to cause the failure of the life support device or to affect its safety or effectiveness.

Customers represent that they have all necessary expertise in the safety and regulatory ramifications of their life support devices or systems, and acknowledge and agree that they are solely responsible for all legal, regulatory and safety-related requirements concerning their products and any use of Diodes Incorporated products in such safety-critical, life support devices or systems, notwithstanding any devices- or systems-related information or support that may be provided by Diodes Incorporated. Further, Customers must fully indemnify Diodes Incorporated and its representatives against any damages arising out of the use of Diodes Incorporated products in such safety-critical, life support devices or systems.

Copyright © 2019, Diodes Incorporated

www.diodes.com