chanhvinh.com

Dialight

616 Series

LED Panel Mount Indicators for 16mm Mounting Hole



FEATURES / BENEFITS

- RoHS Compliant
- Long Life - typically 100K hours
- Low power consumption - uses up to 90% less energy than an incandescent indicator
- No heat generated
- Colors include red, green and yellow
- Front panel mounting

APPLICATIONS

Dialight's 600 series of metric indicators are designed for a variety of applications such as:

- Main and remote power indication
- Maintenance and warning indication
- Status Indication
- Instrumentation

...and many more!

SPECIFICATIONS

- Voltage requirements: 6, 12 and 24 VDC (No limiting resistor required)
- Electrical connection through solder terminals
- Mounting hole size: 0.642 inches (16.3 mm)
- Maximum panel thickness: 0.236 inches (6.3 mm)
- Mounts with lock washer and nut (0.217 lbs/ft or 3 Kg/cm torque recommended)
- Operating Temperature : -25ºC to +85ºC
- Storage Temperature: -25ºC to +100ºC
- Housing Material: Polycarbonate
- Lens Material: Polycarbonate to match emitting color

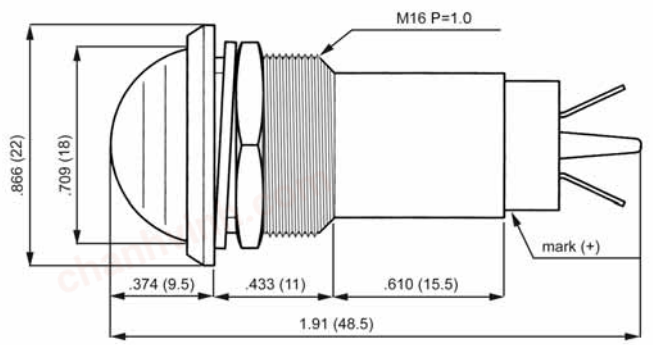

Dimensions in inches [mm]
All measurements are typical

Part Number	Color	Voltage (VDC)	Current (mA)	Typ. Intensity (mcd)	RoHS Compliant
616-1132-120F	Red	6	15	60	✔
616-1232-120F	Green	6	15	110	✔
616-1332-120F	Yellow	6	15	90	✔
616-1132-130F	Red	12	15	60	✔
616-1232-130F	Green	12	15	110	✔
616-1332-130F	Yellow	12	15	90	✔
616-1132-140F	Red	24	15	60	✔
616-1232-140F	Green	24	15	110	✔
616-1332-140F	Yellow	24	15	90	✔

Dialight reserves the right to make changes at any time in order to supply the best product possible.

A4703 UL REGISTERED FIRM ISO 9001 Dialight Corporation

RoHS COMPLIANT

Dialight Corporation
1501 Route 34 South • Farmingdale, NJ 07727 USA
Tel: (1) 732-919-3119 • Fax: (1) 732-751-5778 • www.dialight.com