chanhvinh.com

CY62147EV30 MoBL®

4-Mbit (256 K × 16) Static RAM

Features

- Very high speed: 45 ns
- Temperature ranges
  - Industrial: –40 °C to +85 °C
- Wide voltage range: 2.20 V to 3.60 V
- Pin compatible with CY62147DV30
- Ultra low standby power
  - Typical standby current: 1 µA
  - Maximum standby current: 7 µA (Industrial)
- Ultra low active power
  - Typical active current: 2 mA at f = 1 MHz
- Easy memory expansion with $\overline{CE}$ [1] and $\overline{OE}$ features
- Automatic power-down when deselected
- Complementary metal oxide semiconductor (CMOS) for optimum speed and power
- Available in Pb-free 48-ball very fine ball grid array (VFBGA) (single/dual CE option) and 44-pin thin small outline package (TSOP) II packages
- Byte power-down feature

Functional Description

The CY62147EV30 is a high performance CMOS static RAM (SRAM) organized as 256 K words by 16 bits. This device features advanced circuit design to provide ultra low active current. It is ideal for providing More Battery Life™ (MoBL®) in portable applications such as cellular telephones. The device also has an automatic power down feature that significantly reduces power consumption when addresses are not toggling. Placing the device into standby mode reduces power consumption by more than 99 percent when deselected ($\overline{CE}$ HIGH or both $\overline{BLE}$ and $\overline{BHE}$ are HIGH). The input and output pins (I/O_0 through I/O_{15}) are placed in a high impedance state when:

- Deselected ($\overline{CE}$ HIGH)
- Outputs are disabled ($\overline{OE}$ HIGH)
- Both Byte High Enable and Byte Low Enable are disabled ($\overline{BHE}$, $\overline{BLE}$ HIGH)
- Write operation is active ($\overline{CE}$ LOW and $\overline{WE}$ LOW)

To write to the device, take Chip Enable ($\overline{CE}$) and Write Enable ($\overline{WE}$) inputs LOW. If Byte Low Enable ($\overline{BLE}$) is LOW, then data from I/O pins (I/O_0 through I/O_7) is written into the location specified on the address pins (A_0 through A_{17}). If Byte High Enable ($\overline{BHE}$) is LOW, then data from I/O pins (I/O_8 through I/O_{15}) is written into the location specified on the address pins (A_0 through A_{17}).

To read from the device, take Chip Enable ($\overline{CE}$) and Output Enable ($\overline{OE}$) LOW while forcing the Write Enable ($\overline{WE}$) HIGH. If Byte Low enable ($\overline{BLE}$) is LOW, then data from the memory location specified by the address pins appear on I/O_0 to I/O_7. If Byte High enable ($\overline{BHE}$) is LOW, then data from memory appears on I/O_8 to I/O_{15}. See the Truth Table on page 11 for a complete description of read and write modes.

For a complete list of related documentation, click here.

Logic Block Diagram

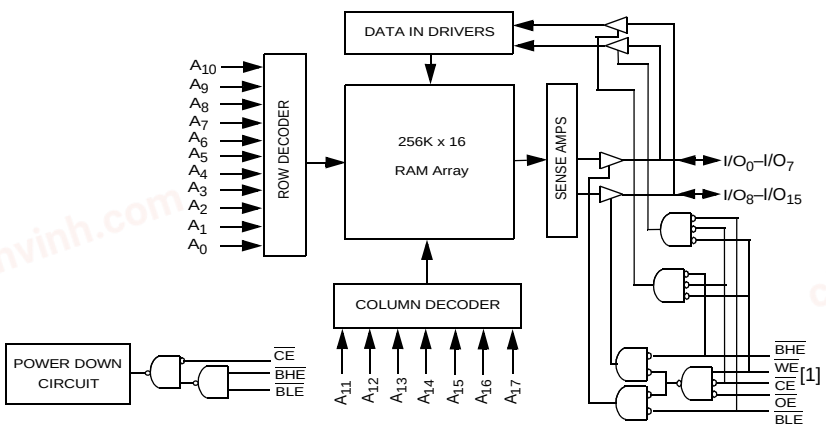

Note

1. BGA packaged device is offered in single CE and dual CE options. In this data sheet, for a dual CE device, $\overline{CE}$ refers to the internal logical combination of $\overline{CE_1}$ and CE_2 such that when $\overline{CE_1}$ is LOW and CE_2 is HIGH, $\overline{CE}$ is LOW. For all other cases $\overline{CE}$ is HIGH.

chanhvinh.com

Contents

Product Portfolio **3**
Pin Configurations **3**
Maximum Ratings **4**
Operating Range **4**
Electrical Characteristics **4**
Capacitance **5**
Thermal Resistance **5**
AC Test Load and Waveforms **5**
Data Retention Characteristics **6**
Data Retention Waveform **6**
Switching Characteristics **7**
Switching Waveforms **8**
Truth Table **11**
Ordering Information **12**
Ordering Code Definitions 12
Package Diagrams **13**
Acronyms **15**
Document Conventions **15**
Units of Measure 15
Document History Page **16**
Sales, Solutions, and Legal Information **18**
Worldwide Sales and Design Support 18
Products 18
PSoC® Solutions 18
Cypress Developer Community 18
Technical Support 18

chanhvinh.com

Product Portfolio

Product	Range	V_{CC} Range (V)			Speed (ns)	Power Dissipation					
						Operating I_{CC} (mA)				Standby I_{SB2} (µA)	
						f = 1 MHz		f = f_{max}			
		Min	Typ [2]	Max		Typ [2]	Max	Typ [2]	Max	Typ [2]	Max
CY62147EV30LL	Industrial	2.2	3.0	3.6	45 ns	2	2.5	15	20	1	7

Pin Configurations

Figure 1. 48-ball VFBGA (Single Chip Enable) [3, 4]

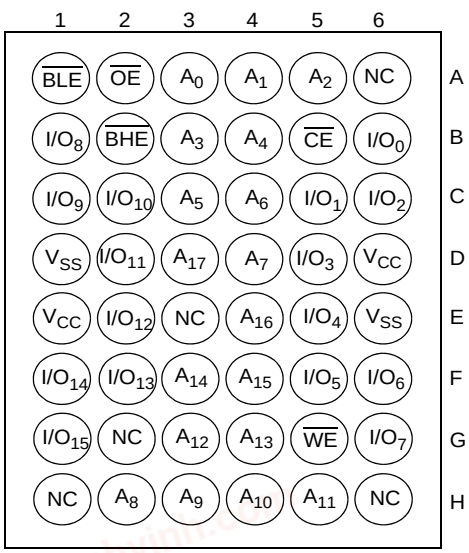

Figure 2. 48-ball VFBGA (Dual Chip Enable) [3, 4]

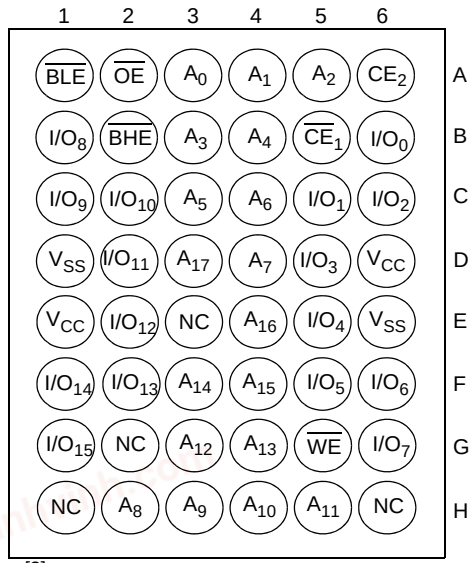

Figure 3. 44-pin TSOP II [3]

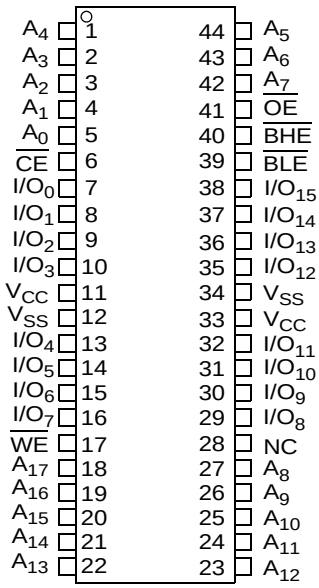

Notes
2. Typical values are included for reference only and are not guaranteed or tested. Typical values are measured at $V_{CC} = V_{CC(typ)}$, T_A = 25 °C.
3. NC pins are not connected on the die.
4. Pins H1, G2, and H6 in the BGA package are address expansion pins for 8 Mb, 16 Mb, and 32 Mb, respectively.

chanhvinh.com

Maximum Ratings

Exceeding the maximum ratings may impair the useful life of the device. User guidelines are not tested.

Storage temperature ..... –65 °C to + 150 °C

Ambient temperature with power applied ..... –55 °C to +125 °C

Supply voltage to ground potential .....–0.3 V to + 3.9 V ($V_{CC(max)}$ + 0.3 V)

DC voltage applied to outputs in High Z state [5, 6] .....–0.3 V to 3.9 V ($V_{CC(max)}$ + 0.3 V)

DC input voltage [5, 6] .....–0.3 V to 3.9 V ($V_{CC(max)}$ + 0.3 V)

Output current into outputs (LOW) ..... 20 mA

Static discharge voltage (MIL-STD-883, method 3015) ..... > 2001 V

Latch-up current .....> 200 mA

Operating Range

Device	Range	Ambient Temperature	V_{CC} [7]
CY62147EV30LL	Industrial	–40 °C to +85 °C	2.2 V to 3.6 V

Electrical Characteristics

Over the Operating Range

Parameter	Description	Test Conditions		45 ns (Industrial)			Unit
				Min	Typ [8]	Max	
V_{OH}	Output HIGH voltage	I_{OH} = –0.1 mA		2.0	–	–	V
		I_{OH} = –1.0 mA, $V_{CC} \geq$ 2.70 V		2.4	–	–	V
V_{OL}	Output LOW voltage	I_{OL} = 0.1 mA		–	–	0.4	V
		I_{OL} = 2.1 mA, V_{CC} = 2.70 V		–	–	0.4	V
V_{IH}	Input HIGH voltage	V_{CC} = 2.2 V to 2.7 V		1.8	–	V_{CC} + 0.3	V
		V_{CC}= 2.7 V to 3.6 V		2.2	–	V_{CC} + 0.3	V
V_{IL}	Input LOW voltage	V_{CC} = 2.2 V to 2.7 V		–0.3	–	0.6	V
		V_{CC}= 2.7 V to 3.6 V		–0.3	–	0.8	V
I_{IX}	Input leakage current	GND ≤ V_I ≤ V_{CC}		–1	–	+1	µA
I_{OZ}	Output leakage current	GND ≤ V_O ≤ V_{CC}, output disabled		–1	–	+1	µA
I_{CC}	V_{CC} operating supply current	f = f_{max} = 1/t_{RC}	V_{CC} = $V_{CC(max)}$, I_{OUT} = 0 mA CMOS levels	–	15	20	mA
		f = 1 MHz		–	2	2.5	
I_{SB1} [9]	Automatic $\overline{CE}$ power-down current – CMOS inputs	$\overline{CE}$ ≥ V_{CC} – 0.2 V, V_{IN} ≥ V_{CC} – 0.2 V, V_{IN} ≤ 0.2 V, f = f_{max} (address and data only), f = 0 (OE, BHE, BLE and WE), V_{CC} = 3.60 V		–	1	7	µA
I_{SB2} [9]	Automatic $\overline{CE}$ power-down current – CMOS inputs	$\overline{CE}$ ≥ V_{CC} – 0.2 V, V_{IN} ≥ V_{CC} – 0.2 V or V_{IN} ≤ 0.2 V, f = 0, V_{CC} = 3.60 V		–	1	7	µA

Notes

5. $V_{IL(min)}$ = –2.0 V for pulse durations less than 20 ns.
6. $V_{IH(max)}$ = V_{CC} + 0.75 V for pulse durations less than 20 ns.
7. Full device AC operation assumes a minimum of 100 µs ramp time from 0 to $V_{CC(min)}$ and 200 µs wait time after V_{CC} stabilization.
8. Typical values are included for reference only and are not guaranteed or tested. Typical values are measured at V_{CC} = $V_{CC(typ)}$, T_A = 25 °C.
9. Chip enable ($\overline{CE}$) and byte enables ($\overline{BHE}$ and $\overline{BLE}$) need to be tied to CMOS levels to meet the I_{SB1} / I_{SB2} / I_{CCDR} spec. Other inputs can be left floating.

chanhvinh.com

Capacitance

Parameter [10]	Description	Test Conditions	Max	Unit
C_{IN}	Input capacitance	T_A = 25 °C, f = 1 MHz, V_{CC} = $V_{CC(typ)}$	10	pF
C_{OUT}	Output capacitance		10	pF

Thermal Resistance

Parameter [10]	Description	Test Conditions	48-ball VFB-GA Package	44-pin TSOP II Package	Unit
Θ_{JA}	Thermal resistance (junction to ambient)	Still Air, soldered on a 3 × 4.5 inch, two-layer printed circuit board	75	77	°C/W
Θ_{JC}	Thermal resistance (junction to case)		10	13	°C/W

AC Test Load and Waveforms

Figure 4. AC Test Load and Waveforms

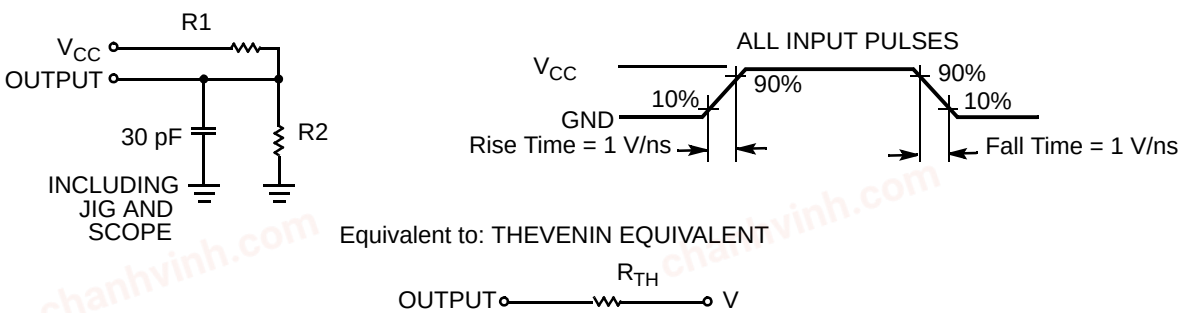

Parameters	2.50 V	3.0 V	Unit
R1	16667	1103	Ω
R2	15385	1554	Ω
R_{TH}	8000	645	Ω
V_{TH}	1.20	1.75	V

Note
10. Tested initially and after any design or process changes that may affect these parameters.

chanhvinh.com

Data Retention Characteristics

Over the Operating Range

Parameter	Description	Conditions	Min	Typ [11]	Max	Unit
V_{DR}	V_{CC} for data retention		1.5	–	–	V
I_{CCDR} [12]	Data retention current	V_{CC} = 1.5 V, $\overline{CE} \geq V_{CC} - 0.2$ V, $V_{IN} \geq V_{CC} - 0.2$ V or $V_{IN} \leq 0.2$ V	–	0.8	7	µA
t_{CDR} [13]	Chip deselect to data retention time		0	–	–	ns
t_R [14]	Operation recovery time		45	–	–	ns

Data Retention Waveform

Figure 5. Data Retention Waveform [15, 16]

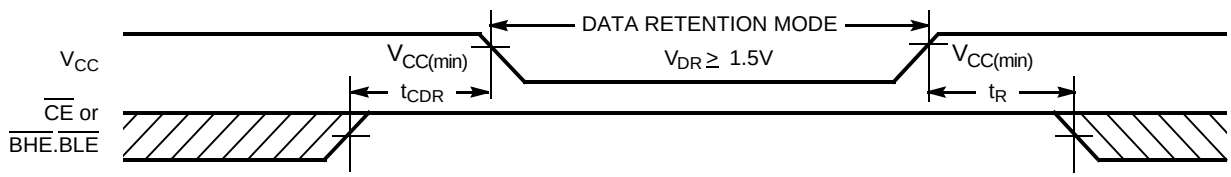

Notes

11. Typical values are included for reference only and are not guaranteed or tested. Typical values are measured at $V_{CC} = V_{CC(typ)}$, T_A = 25 °C.
12. Chip enable ($\overline{CE}$) and byte enables ($\overline{BHE}$ and $\overline{BLE}$) need to be tied to CMOS levels to meet the I_{SB1} / I_{SB2} / I_{CCDR} spec. Other inputs can be left floating.
13. Tested initially and after any design or process changes that may affect these parameters.
14. Full device operation requires linear V_{CC} ramp from V_{DR} to $V_{CC(min)} \geq 100$ µs or stable at $V_{CC(min)} \geq 100$ µs.
15. BGA packaged device is offered in single CE and dual CE options. In this data sheet, for a dual CE device, $\overline{CE}$ refers to the internal logical combination of $\overline{CE}_1$ and CE_2 such that when CE_1 is LOW and CE_2 is HIGH, CE is LOW. For all other cases CE is HIGH.
16. $\overline{BHE}$.$\overline{BLE}$ is the AND of both $\overline{BHE}$ and $\overline{BLE}$. Deselect the chip by either disabling the chip enable signals or by disabling both $\overline{BHE}$ and $\overline{BLE}$.

chanhvinh.com

Switching Characteristics

Over the Operating Range

Parameter [17, 18]	Description	45 ns (Industrial)		Unit
		Min	Max	
Read Cycle				
t_{RC}	Read cycle time	45	–	ns
t_{AA}	Address to data valid	–	45	ns
t_{OHA}	Data hold from address change	10	–	ns
t_{ACE}	$\overline{CE}$ LOW to data valid	–	45	ns
t_{DOE}	$\overline{OE}$ LOW to data valid	–	22	ns
t_{LZOE}	$\overline{OE}$ LOW to low Z [19]	5	–	ns
t_{HZOE}	$\overline{OE}$ HIGH to high Z [19, 20]	–	18	ns
t_{LZCE}	$\overline{CE}$ LOW to low Z [19]	10	–	ns
t_{HZCE}	$\overline{CE}$ HIGH to high Z [19, 20]	–	18	ns
t_{PU}	$\overline{CE}$ LOW to power-up	0	–	ns
t_{PD}	$\overline{CE}$ HIGH to power-down	–	45	ns
t_{DBE}	$\overline{BLE}$/$\overline{BHE}$ LOW to data valid	–	45	ns
t_{LZBE}	$\overline{BLE}$/$\overline{BHE}$ LOW to low Z [19, 21]	5	–	ns
t_{HZBE}	$\overline{BLE}$/$\overline{BHE}$ HIGH to high Z [19, 20]	–	18	ns
Write Cycle [22, 23]				
t_{WC}	Write cycle time	45	–	ns
t_{SCE}	$\overline{CE}$ LOW to write end	35	–	ns
t_{AW}	Address setup to write end	35	–	ns
t_{HA}	Address hold from write end	0	–	ns
t_{SA}	Address setup to write start	0	–	ns
t_{PWE}	$\overline{WE}$ pulse width	35	–	ns
t_{BW}	$\overline{BLE}$/$\overline{BHE}$ LOW to write end	35	–	ns
t_{SD}	Data setup to write end	25	–	ns
t_{HD}	Data hold from write end	0	–	ns
t_{HZWE}	$\overline{WE}$ LOW to high Z [19, 20]	–	18	ns
t_{LZWE}	$\overline{WE}$ HIGH to low Z [19]	10	–	ns

Notes

17. Test conditions for all parameters other than tri-state parameters assume signal transition time of 3 ns (1V/ns) or less, timing reference levels of $V_{CC(typ)}/2$, input pulse levels of 0 to $V_{CC(typ)}$, and output loading of the specified I_{OL}/I_{OH} as shown in the Figure 4 on page 5.
18. In an earlier revision of this device, under a specific application condition, READ and WRITE operations were limited to switching of the byte enable and/or chip enable signals as described in the Application Notes AN13842 and AN66311. However, the issue has been fixed and in production now, and hence, these Application Notes are no longer applicable. They are available for download on our website as they contain information on the date code of the parts, beyond which the fix has been in production.
19. At any temperature and voltage condition, t_{HZCE} is less than t_{LZCE}, t_{HZBE} is less than t_{LZBE}, t_{HZOE} is less than t_{LZOE}, and t_{HZWE} is less than t_{LZWE} for any device.
20. t_{HZOE}, t_{HZCE}, t_{HZBE}, and t_{HZWE} transitions are measured when the outputs enter a high impedance state.
21. If both byte enables are toggled together, this value is 10 ns.
22. The internal write time of the memory is defined by the overlap of $\overline{WE}$, $\overline{CE}$ = V_{IL}, $\overline{BHE}$, $\overline{BLE}$, or both = V_{IL}. All signals must be active to initiate a write and any of these signals can terminate a write by going inactive. The data input setup and hold timing must be referenced to the edge of the signal that terminates the write.
23. The minimum write cycle pulse width for Write Cycle No. 3 ($\overline{WE}$ Controlled, $\overline{OE}$ LOW) should be equal to the sum of t_{SD} and t_{HZWE}.

chanhvinh.com

Switching Waveforms

Figure 6. Read Cycle No. 1: Address Transition Controlled [24, 25]

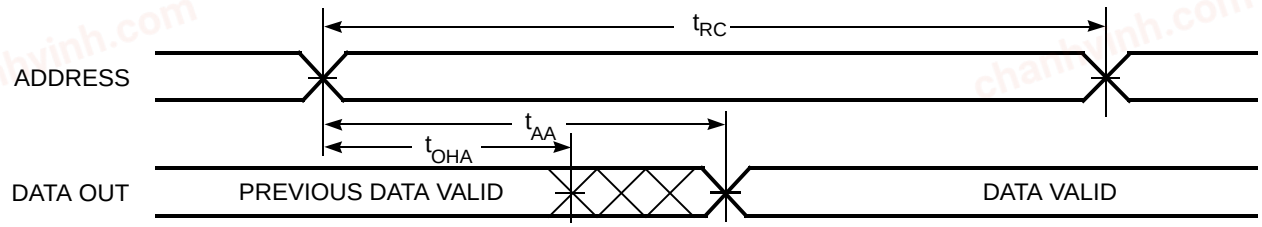

Figure 7. Read Cycle No. 2: $\overline{OE}$ Controlled [25, 26, 27]

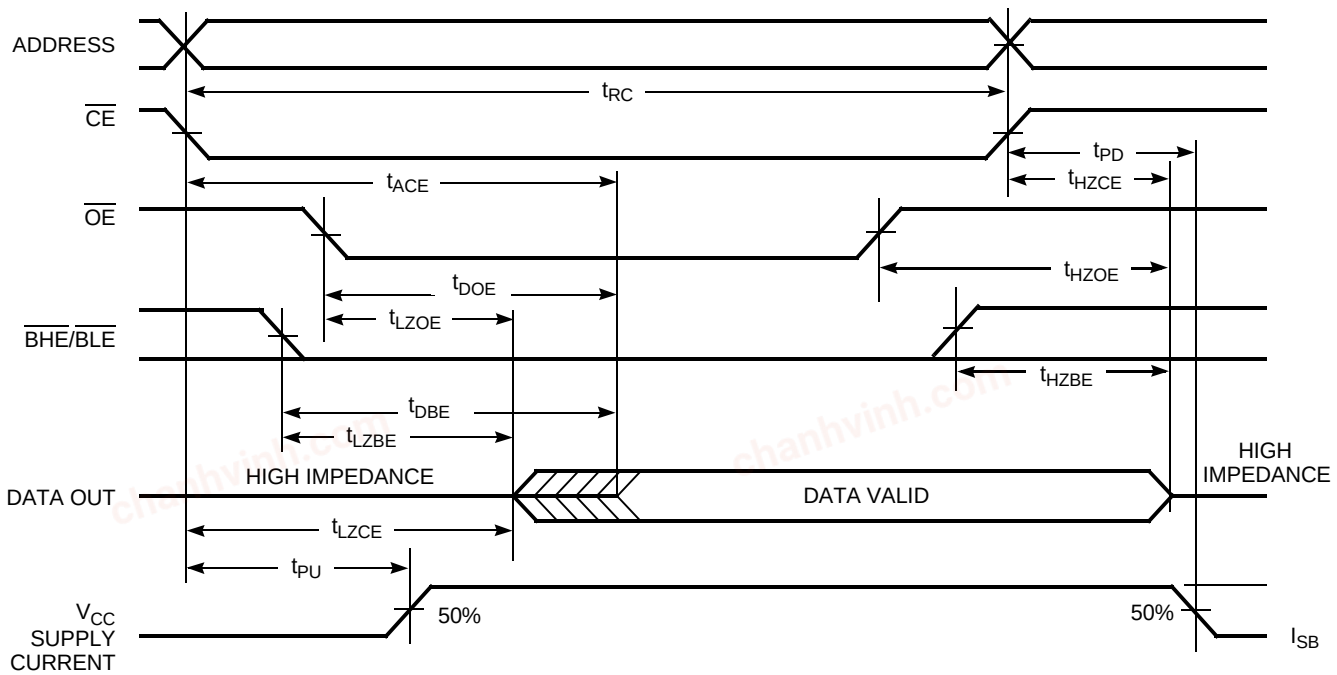

Notes
24. The device is continuously selected. $\overline{OE}$, $\overline{CE}$ = V_{IL}, $\overline{BHE}$, $\overline{BLE}$, or both = V_{IL}.
25. $\overline{WE}$ is HIGH for read cycle.
26. BGA packaged device is offered in single CE and dual CE options. In this data sheet, for a dual CE device, $\overline{CE}$ refers to the internal logical combination of $\overline{CE_1}$ and CE_2 such that when CE_1 is LOW and CE_2 is HIGH, CE is LOW. For all other cases CE is HIGH.
27. Address valid before or similar to CE and BHE, BLE transition LOW.

chanhvinh.com

Switching Waveforms (continued)

Figure 8. Write Cycle No. 1: $\overline{WE}$ Controlled [28, 29, 30, 31]

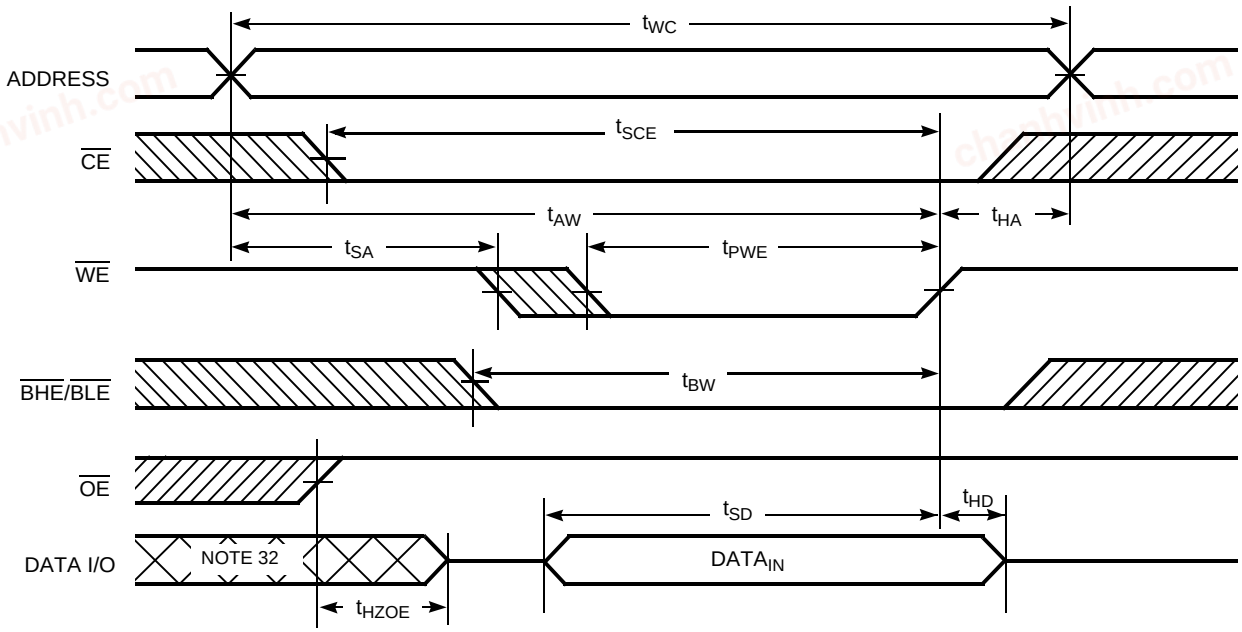

Figure 9. Write Cycle No. 2: $\overline{CE}$ Controlled [28, 29, 30, 31]

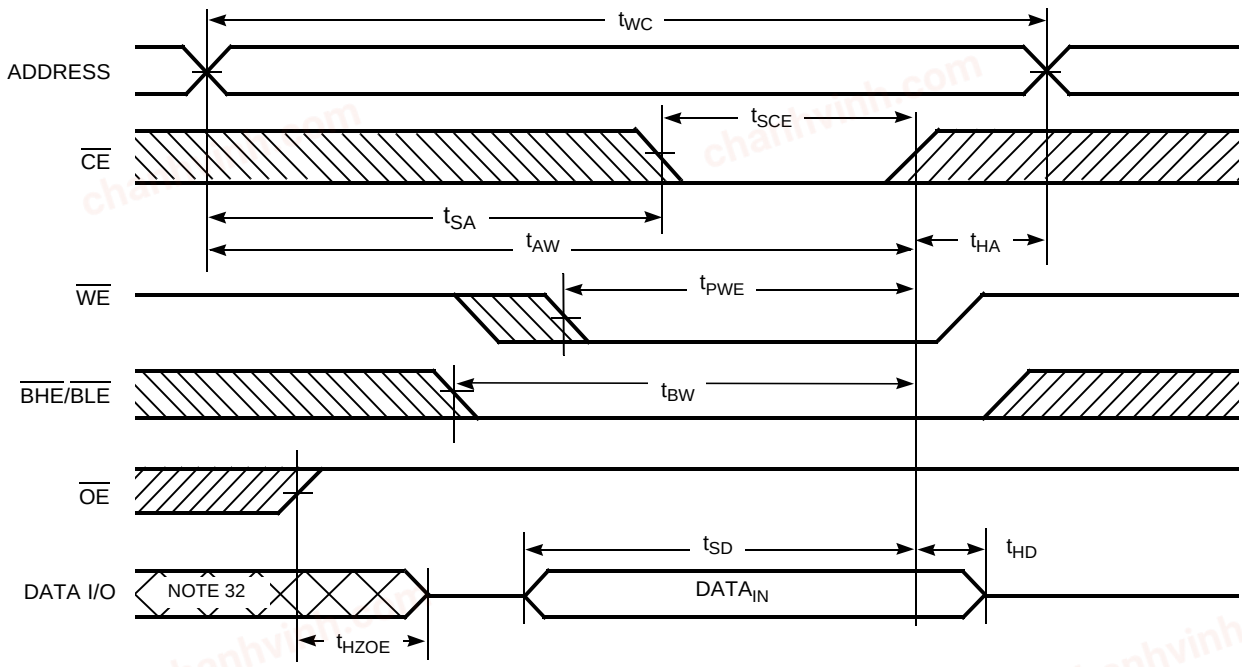

Notes

28. BGA packaged device is offered in single CE and dual CE options. In this data sheet, for a dual CE device, $\overline{CE}$ refers to the internal logical combination of $\overline{CE_1}$ and CE_2 such that when CE_1 is LOW and CE_2 is HIGH, $\overline{CE}$ is LOW. For all other cases $\overline{CE}$ is HIGH.
29. The internal write time of the memory is defined by the overlap of $\overline{WE}$, $\overline{CE}$ = V_{IL}, $\overline{BHE}$, $\overline{BLE}$, or both = V_{IL}. All signals must be active to initiate a write and any of these signals can terminate a write by going inactive. The data input setup and hold timing must be referenced to the edge of the signal that terminates the write.
30. Data I/O is high impedance if $\overline{OE}$ = V_{IH}.
31. If $\overline{CE}$ goes HIGH simultaneously with $\overline{WE}$ = V_{IH}, the output remains in a high impedance state.
32. During this period, the I/Os are in output state. Do not apply input signals.

chanhvinh.com

Switching Waveforms (continued)

Figure 10. Write Cycle No. 3: $\overline{WE}$ Controlled, $\overline{OE}$ LOW [33, 34, 35]

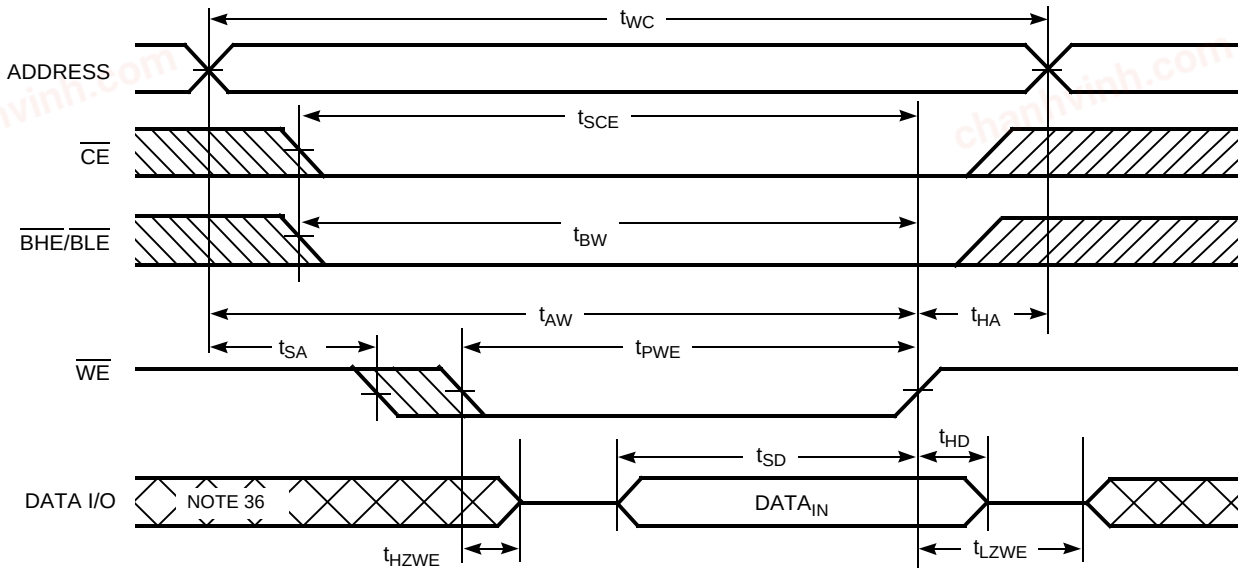

Figure 11. Write Cycle No. 4: $\overline{BHE}/\overline{BLE}$ Controlled [33, 34]

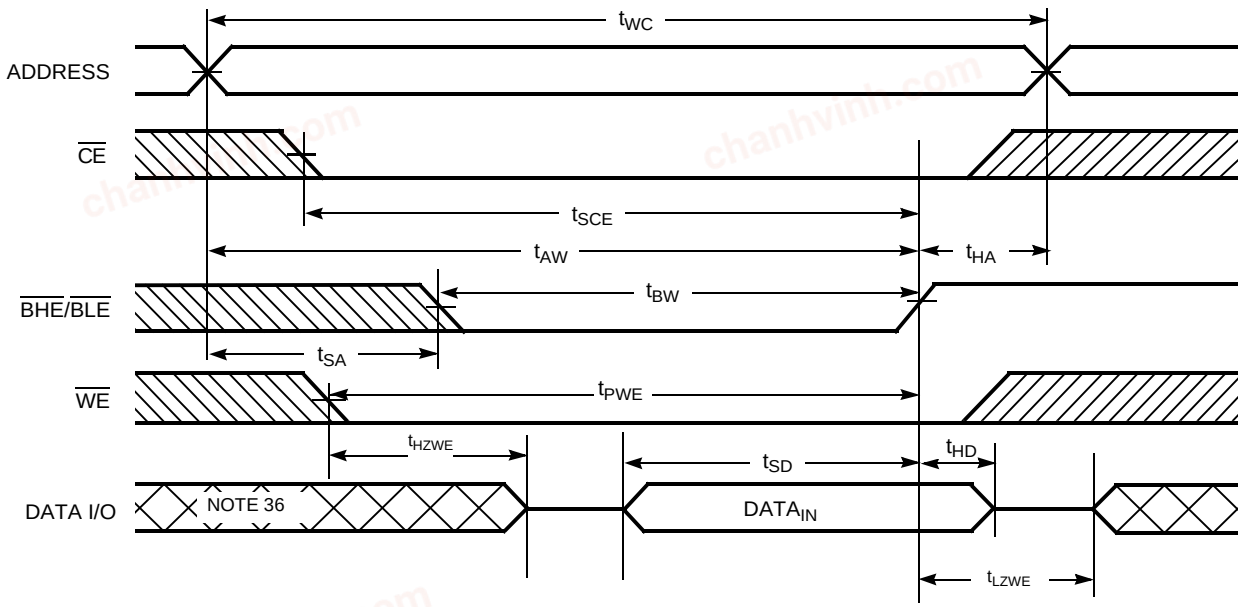

Notes

33. BGA packaged device is offered in single CE and dual CE options. In this data sheet, for a dual CE device, $\overline{CE}$ refers to the internal logical combination of $\overline{CE_1}$ and CE_2 such that when $\overline{CE_1}$ is LOW and CE_2 is HIGH, $\overline{CE}$ is LOW. For all other cases $\overline{CE}$ is HIGH.
34. If $\overline{CE}$ goes HIGH simultaneously with $\overline{WE}$ = V_{IH}, the output remains in a high impedance state.
35. The minimum write cycle pulse width should be equal to the sum of t_{SD} and t_{HZWE}.
36. During this period, the I/Os are in output state. Do not apply input signals.

chanhvinh.com

Truth Table

$\overline{CE}$ [37, 38]	$\overline{WE}$	$\overline{OE}$	$\overline{BHE}$	$\overline{BLE}$	I/Os	Mode	Power
H	X	X	X	X	High Z	Deselect/Power-down	Standby (I_{SB})
L	X	X	H	H	High Z	Deselect/Power-down	Standby (I_{SB})
L	H	L	L	L	Data out (I/O_0–I/O_{15})	Read	Active (I_{CC})
L	H	L	H	L	Data out (I/O_0–I/O_7); I/O_8–I/O_{15} in High Z	Read	Active (I_{CC})
L	H	L	L	H	Data out (I/O_8–I/O_{15}); I/O_0–I/O_7 in High Z	Read	Active (I_{CC})
L	H	H	L	L	High Z	Output disabled	Active (I_{CC})
L	H	H	H	L	High Z	Output disabled	Active (I_{CC})
L	H	H	L	H	High Z	Output disabled	Active (I_{CC})
L	L	X	L	L	Data in (I/O_0–I/O_{15})	Write	Active (I_{CC})
L	L	X	H	L	Data in (I/O_0–I/O_7); I/O_8–I/O_{15} in High Z	Write	Active (I_{CC})
L	L	X	L	H	Data in (I/O_8–I/O_{15}); I/O_0–I/O_7 in High Z	Write	Active (I_{CC})

Notes

37. BGA packaged device is offered in single CE and dual CE options. In this data sheet, for a dual CE device, $\overline{CE}$ refers to the internal logical combination of $\overline{CE_1}$ and CE_2 such that when $\overline{CE_1}$ is LOW and CE_2 is HIGH, CE is LOW. For all other cases CE is HIGH.
38. For the Dual Chip Enable device, $\overline{CE}$ refers to the internal logical combination of $\overline{CE_1}$ and CE_2 such that when $\overline{CE_1}$ is LOW and CE_2 is HIGH, $\overline{CE}$ is LOW. For all other cases CE is HIGH. Intermediate voltage levels are not permitted on any of the Chip Enable pins (CE for the Single Chip Enable device; $\overline{CE_1}$ and CE_2 for the Dual Chip Enable device).

chanhvinh.com

Ordering Information

Speed (ns)	Ordering Code	Package Diagram	Package Type	Operating Range
45	CY62147EV30LL-45BVI	51-85150	48-ball VFBGA [39]	Industrial
	CY62147EV30LL-45BVXI	51-85150	48-ball VFBGA (Pb-free) [39]	
	CY62147EV30LL-45B2XI	51-85150	48-ball VFBGA (Pb-free) [40]	
	CY62147EV30LL-45ZSXI	51-85087	44-pin TSOP Type II (Pb-free)	

Contact your local Cypress sales representative for availability of these parts.

Ordering Code Definitions

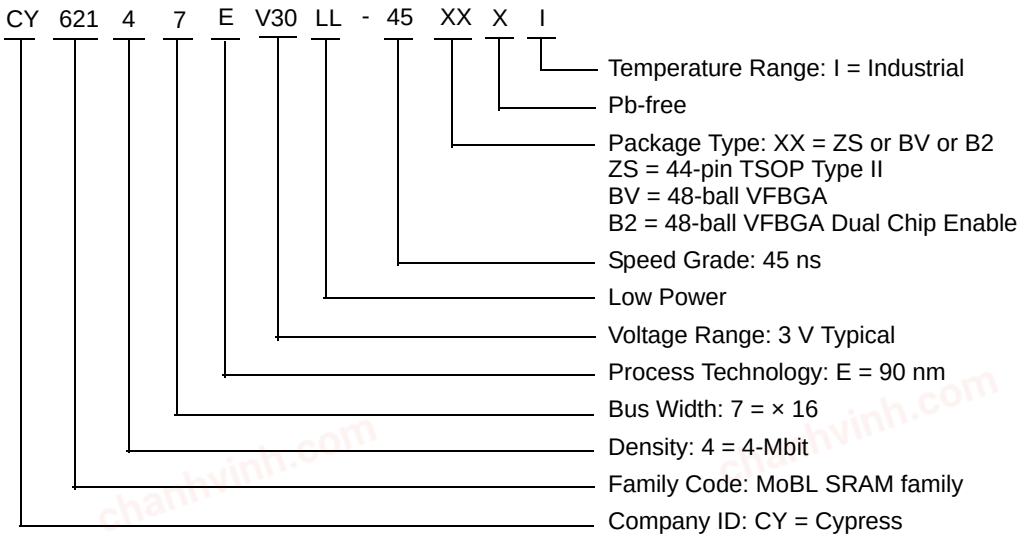

Notes
39. This BGA package is offered with single chip enable.
40. This BGA package is offered with dual chip enable.

chanhvinh.com

Package Diagrams

Figure 12. 48-ball VFBGA (6 × 8 × 1.0 mm) BV48/BZ48 Package Outline, 51-85150

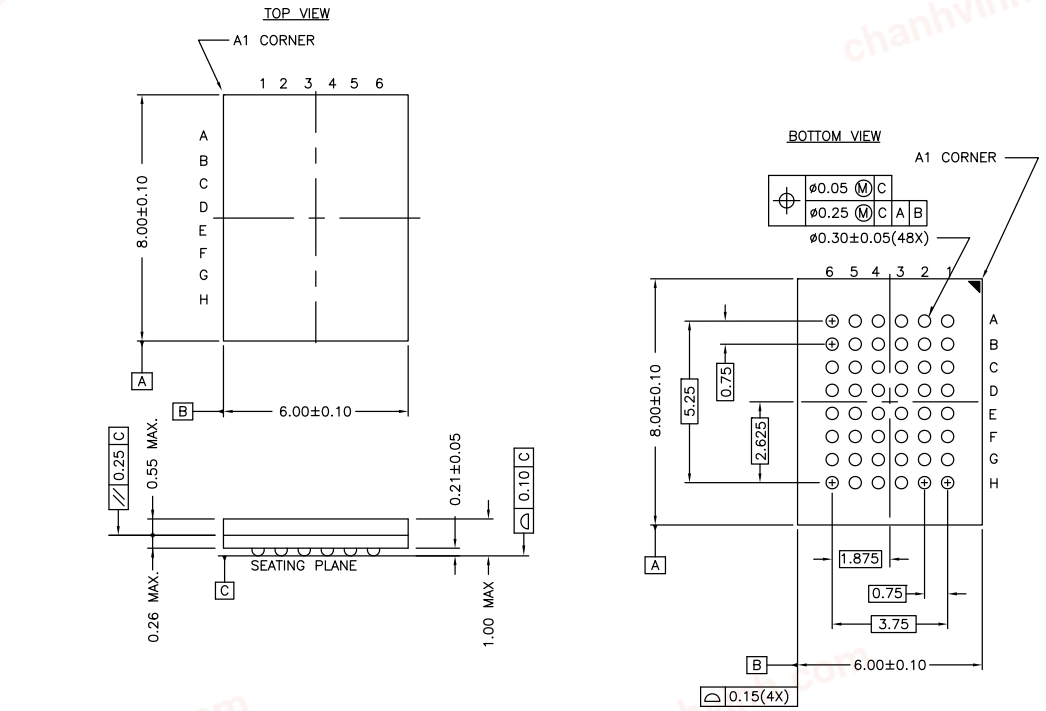

NOTE:
PACKAGE WEIGHT: See Cypress Package Material Declaration Datasheet (PMDD) posted on the Cypress web.

51-85150 *H

chanhvinh.com

Package Diagrams (continued)

Figure 13. 44-pin TSOP Z44-II Package Outline, 51-85087

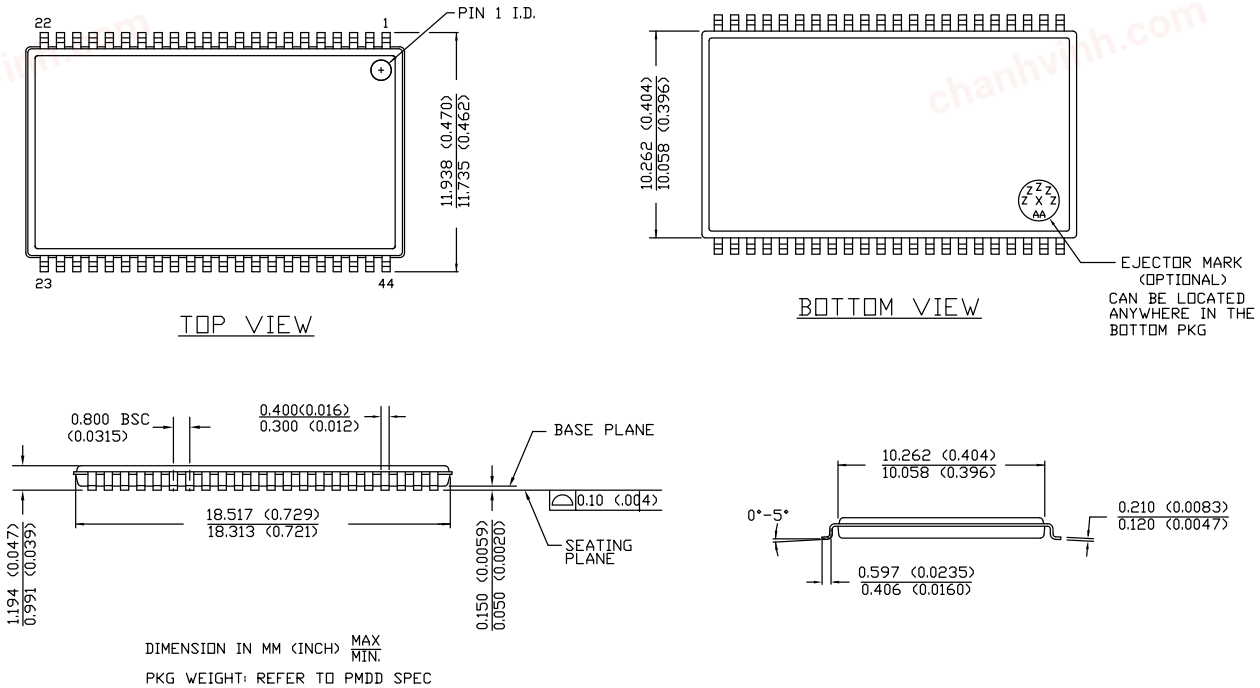

51-85087 *E

chanhvinh.com

Acronyms

Acronym	Description
$\overline{BHE}$	Byte High Enable
$\overline{BLE}$	Byte Low Enable
$\overline{CE}$	Chip Enable
CMOS	Complementary Metal Oxide Semiconductor
I/O	Input/Output
$\overline{OE}$	Output Enable
SRAM	Static Random Access Memory
TSOP	Thin Small Outline Package
VFBGA	Very Fine-Pitch Ball Grid Array
$\overline{WE}$	Write Enable

Document Conventions

Units of Measure

Symbol	Unit of Measure
°C	degree Celsius
MHz	megahertz
µA	microampere
µs	microsecond
mA	milliampere
ns	nanosecond
Ω	ohm
pF	picofarad
V	volt
W	watt

chanhvinh.com

Document History Page

Document Title: CY62147EV30 MoBL®, 4-Mbit (256 K × 16) Static RAM Document Number: 38-05440				
Revision	**ECN**	**Orig. of Change**	**Submission Date**	**Description of Change**
**	201861	AJU	01/13/04	New data sheet.
*A	247009	SYT	See ECN	Changed status from Advanced Information to Preliminary Moved Product Portfolio to Page 2 Changed Vcc stabilization time in footnote #8 from 100 µs to 200 µs Removed Footnote #15(t_{LZBE}) from Previous Revision Changed I_{CCDR} from 2.0 µA to 2.5 µA Changed typo in Data Retention Characteristics(t_R) from 100 µs to t_{RC} ns Changed t_{OHA} from 6 ns to 10 ns for both 35 ns and 45 ns Speed Bin Changed t_{HZOE}, t_{HZBE}, t_{HZWE} from 12 to 15 ns for 35 ns Speed Bin and 15 to 18 ns for 45 ns Speed Bin Changed t_{SCE} and t_{BW} from 25 to 30 ns for 35 ns Speed Bin and 40 to 35 ns for 45 ns Speed Bin Changed t_{HZCE} from 12 to 18 ns for 35 ns Speed Bin and 15 to 22 ns for 45 ns Speed Bin Changed t_{SD} from 15 to 18 ns for 35 ns Speed Bin and 20 to 22 ns for 45 ns Speed Bin Changed t_{DOE} from 15 to 18 ns for 35 ns Speed Bin Changed Ordering Information to include Pb-Free Packages
*B	414807	ZSD	See ECN	Changed status from Preliminary to Final Changed the address of Cypress Semiconductor Corporation on Page #1 from “3901 North First Street” to “198 Champion Court” Removed 35ns Speed Bin, “L” version of CY62147EV30 Changed ball E3 from DNU to NC. Removed redundant foot note on DNU. Changed I_{CC} (Max) value from 2 mA to 2.5 mA and I_{CC} (Typ) value from 1.5 mA to 2 mA at f = 1 MHz Changed I_{CC} (Typ) value from 12 mA to 15 mA at f = f_{max} Changed I_{SB1} and I_{SB2} Typ values from 0.7 µA to 1 µA and Max values from 2.5 µA to 7 µA. Changed I_{CCDR} from 2.5 µA to 7 µA. Added I_{CCDR} typical value. Changed AC test load capacitance from 50 pF to 30 pF on Page #4, changed t_{LZOE} from 3 ns to 5 ns, changed t_{LZCE}, t_{LZBE} and t_{LZWE} from 6 ns to 10 ns, changed t_{HZCE} from 22 ns to 18 ns, changed t_{PWE} from 30 ns to 35 ns and changed t_{SD} from 22 ns to 25 ns. Updated the package diagram 48-pin VFBGA from *B to *D Updated the ordering information table and replaced the Package Name column with Package Diagram.
*C	464503	NXR	See ECN	Included Automotive Range in product offering Updated Ordering Information.
*D	925501	VKN	See ECN	Added Preliminary Automotive-A information Added footnote #9 related to I_{SB2} and I_{CCDR} Added footnote #14 related AC timing parameters
*E	1045701	VKN	See ECN	Converted Automotive-A and Automotive -E specs from preliminary to final
*F	2577505	VKN / PYRS	10/03/08	Added -45B2XI part (Dual CE option)
*G	2681901	VKN / PYRS	04/01/09	Added CY62147EV30LL-45ZSXA in the ordering information table
*H	2886488	AJU	03/02/2010	Added Contents. Added Note 38. Updated Package Diagrams. Updated links in Sales, Solutions, and Legal Information.

chanhvinh.com

Document History Page (continued)

Document Title: CY62147EV30 MoBL®, 4-Mbit (256 K × 16) Static RAM Document Number: 38-05440				
Revision	**ECN**	**Orig. of Change**	**Submission Date**	**Description of Change**
*I	3109050	PRAS	12/13/2010	Changed Table Footnotes to Notes. Added Ordering Code Definitions.
*J	3123973	RAME	01/31/2011	Separated Industrial and Auto parts from this datasheet Removed Automotive info Added Acronyms and Units of Measure table
*K	3296744	RAME	08/09/2011	Updated Functional Description (Removed reference to AN1064 SRAM system guidelines). Added I_{SB1} to footnote 9 and 12. Notes 17 and 18 moved to parameter section of Switching Characteristics. Added Note 21 and referred the same note in the description of t_{LZBE} parameter.
*L	3456837	TAVA	12/06/2011	Updated Package Diagrams. Updated to new template.
*M	3724736	JISH	08/23/2012	Fixed typo errors and minor clean-up.
*N	4102445	VINI	08/22/2013	Updated Switching Characteristics: Updated Note 18. Updated Package Diagrams: spec 51-85150 – Changed revision from *G to *H. spec 51-85087 – Changed revision from *D to *E. Updated to new template. Completing Sunset Review.
*O	4576526	VINI	11/21/2014	Updated Functional Description: Added “For a complete list of related documentation, click here.” at the end. Updated Switching Characteristics: Added Note 23 and referred the same note in “Write Cycle”. Updated Switching Waveforms: Added Note 35 and referred the same note in Figure 10.
*P	4918858	VINI	09/14/2015	Updated Switching Waveforms: Updated caption of Figure 11 (Removed “$\overline{OE}$ LOW”). Updated to new template. Completing Sunset Review.

chanhvinh.com

Sales, Solutions, and Legal Information

Worldwide Sales and Design Support

Cypress maintains a worldwide network of offices, solution centers, manufacturer's representatives, and distributors. To find the office closest to you, visit us at Cypress Locations.

Products

Automotive	cypress.com/go/automotive
Clocks & Buffers	cypress.com/go/clocks
Interface	cypress.com/go/interface
Lighting & Power Control	cypress.com/go/powerpsoc
Memory	cypress.com/go/memory
PSoC	cypress.com/go/psoc
Touch Sensing	cypress.com/go/touch
USB Controllers	cypress.com/go/USB
Wireless/RF	cypress.com/go/wireless

PSoC® Solutions

psoc.cypress.com/solutions

PSoC 1 | PSoC 3 | PSoC 4 | PSoC 5LP

Cypress Developer Community

Community | Forums | Blogs | Video | Training

Technical Support

cypress.com/go/support

© Cypress Semiconductor Corporation, 2004-2015. The information contained herein is subject to change without notice. Cypress Semiconductor Corporation assumes no responsibility for the use of any circuitry other than circuitry embodied in a Cypress product. Nor does it convey or imply any license under patent or other rights. Cypress products are not warranted nor intended to be used for medical, life support, life saving, critical control or safety applications, unless pursuant to an express written agreement with Cypress. Furthermore, Cypress does not authorize its products for use as critical components in life-support systems where a malfunction or failure may reasonably be expected to result in significant injury to the user. The inclusion of Cypress products in life-support systems application implies that the manufacturer assumes all risk of such use and in doing so indemnifies Cypress against all charges.

Any Source Code (software and/or firmware) is owned by Cypress Semiconductor Corporation (Cypress) and is protected by and subject to worldwide patent protection (United States and foreign), United States copyright laws and international treaty provisions. Cypress hereby grants to licensee a personal, non-exclusive, non-transferable license to copy, use, modify, create derivative works of, and compile the Cypress Source Code and derivative works for the sole purpose of creating custom software and or firmware in support of licensee product to be used only in conjunction with a Cypress integrated circuit as specified in the applicable agreement. Any reproduction, modification, translation, compilation, or representation of this Source Code except as specified above is prohibited without the express written permission of Cypress.

Disclaimer: CYPRESS MAKES NO WARRANTY OF ANY KIND, EXPRESS OR IMPLIED, WITH REGARD TO THIS MATERIAL, INCLUDING, BUT NOT LIMITED TO, THE IMPLIED WARRANTIES OF MERCHANTABILITY AND FITNESS FOR A PARTICULAR PURPOSE. Cypress reserves the right to make changes without further notice to the materials described herein. Cypress does not assume any liability arising out of the application or use of any product or circuit described herein. Cypress does not authorize its products for use as critical components in life-support systems where a malfunction or failure may reasonably be expected to result in significant injury to the user. The inclusion of Cypress' product in a life-support systems application implies that the manufacturer assumes all risk of such use and in doing so indemnifies Cypress against all charges.

Use may be limited by and subject to the applicable Cypress software license agreement.

MoBL is a registered trademark, and More Battery Life is a trademark of Cypress Semiconductor. All products and company names mentioned in this document may be the trademarks of their respective holders.