chanhvinh.com

CUI INC
a bel group

SERIES: DQM1-S | DESCRIPTION: DC-DC CONVERTER

FEATURES

- 1 W isolated output
- industry standard SIP package
- single and dual regulated output
- 3,000 Vdc isolation voltage
- -40 to 105°C temperature range with derating
- certified to EN 62368-1

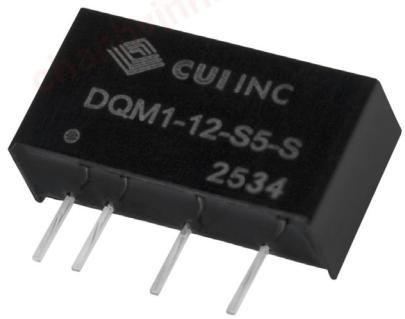

RoHS CE UKCA

MODEL

MODEL	input voltage typ (Vdc)	input voltage range (Vdc)	output voltage (Vdc)	output current min/max (mA)	output power max (W)	ripple & noise[1] max (mVp-p)	efficiency[2] typ (%)
DQM1-3-S3-S	3.3	2.97~3.63	3.3	30/303	1	100	82
DQM1-3-S5-S	3.3	2.97~3.63	5	20/200	1	100	83
DQM1-3-S9-S	3.3	2.97~3.63	9	11/111	1	100	84
DQM1-3-S12-S	3.3	2.97~3.63	12	8/84	1	100	85
DQM1-3-S15-S	3.3	2.97~3.63	15	6/67	1	100	85
DQM1-3-D12-S	3.3	2.97~3.63	±12	±4/42	1	100	85
DQM1-5-S3-S[3]	5	4.5~5.5	3.3	30/303	1	100	83
DQM1-5-S5-S[3]	5	4.5~5.5	5	20/200	1	100	86
DQM1-5-S9-S[3]	5	4.5~5.5	9	11/111	1	100	86
DQM1-5-S12-S[3]	5	4.5~5.5	12	8/84	1	100	88
DQM1-5-S15-S[3]	5	4.5~5.5	15	6/67	1	100	88
DQM1-5-S24-S[3]	5	4.5~5.5	24	4/42	1	100	89
DQM1-5-D3-S[3]	5	4.5~5.5	±3.3	±15/152	1	100	84
DQM1-5-D5-S[3]	5	4.5~5.5	±5	±10/100	1	100	86
DQM1-5-D9-S[3]	5	4.5~5.5	±9	±5/56	1	100	86
DQM1-5-D12-S[3]	5	4.5~5.5	±12	±4/42	1	100	88
DQM1-5-D15-S[3]	5	4.5~5.5	±15	±3/34	1	100	88
DQM1-5-D24-S[3]	5	4.5~5.5	±24	±3/21	1	100	88
DQM1-12-S3-S[3]	12	10.8~13.2	3.3	30/303	1	100	84
DQM1-12-S5-S[3]	12	10.8~13.2	5	20/200	1	100	86
DQM1-12-S9-S[3]	12	10.8~13.2	9	11/111	1	100	87
DQM1-12-S12-S[3]	12	10.8~13.2	12	8/84	1	100	87
DQM1-12-S15-S[3]	12	10.8~13.2	15	6/67	1	100	88
DQM1-12-S24-S[3]	12	10.8~13.2	24	4/42	1	100	89
DQM1-12-D3-S[3]	12	10.8~13.2	±3.3	±15/152	1	100	84
DQM1-12-D5-S[3]	12	10.8~13.2	±5	±10/100	1	100	86
DQM1-12-D9-S[3]	12	10.8~13.2	±9	±5/56	1	100	87
DQM1-12-D12-S[3]	12	10.8~13.2	±12	±4/42	1	100	87
DQM1-12-D15-S[3]	12	10.8~13.2	±15	±3/34	1	100	88

Please read our datasheet & drawing disclaimer here.

chanhvinh.com

MODEL

	input voltage		output voltage	output current	output power	ripple & noise[1]	efficiency[2]
	typ (Vdc)	range (Vdc)	(Vdc)	min/max (mA)	max (W)	max (mVp-p)	typ (%)
DQM1-15-S5-S	15	13.5~16.5	5	20/200	1	100	86
DQM1-15-S9-S	15	13.5~16.5	9	11/111	1	100	87
DQM1-15-S12-S	15	13.5~16.5	12	8/84	1	100	87
DQM1-15-S15-S	15	13.5~16.5	15	6/67	1	100	88
DQM1-15-D5-S	15	13.5~16.5	±5	±10/100	1	100	86
DQM1-15-D12-S	15	13.5~16.5	±12	±4/42	1	100	87
DQM1-15-D15-S	15	13.5~16.5	±15	±3/34	1	100	88
DQM1-24-S3-S	24	21.6~26.4	3.3	30/303	1	100	84
DQM1-24-S5-S	24	21.6~26.4	5	20/200	1	100	87
DQM1-24-S9-S	24	21.6~26.4	9	11/111	1	100	88
DQM1-24-S12-S	24	21.6~26.4	12	8/84	1	100	88
DQM1-24-S15-S	24	21.6~26.4	15	6/67	1	100	88
DQM1-24-S24-S	24	21.6~26.4	24	4/42	1	100	89
DQM1-24-D5-S	24	21.6~26.4	±5	±10/100	1	100	87
DQM1-24-D9-S	24	21.6~26.4	±9	±5/56	1	100	88
DQM1-24-D12-S	24	21.6~26.4	±12	±4/42	1	100	88
DQM1-24-D15-S	24	21.6~26.4	±15	±3/34	1	100	88

Notes:
1. At full load, nominal input, 20 MHz bandwidth oscilloscope.
   It is recommended to use at a load of over 5%. If the load is below 5%, the ripple index of the product may exceed the specifications, but it does not affect the reliability of the product.
2. The efficiency is test by nominal input and max. full load at 25°C.
3. Model is UL/cUL recognized
4. All specifications measured at Ta=25°C, nominal input voltage, rated output load, and after warm up unless otherwise specified.
5. The input voltage should not exceed the specified range value, otherwise it may cause permanent and irreparable damage.

PART NUMBER KEY

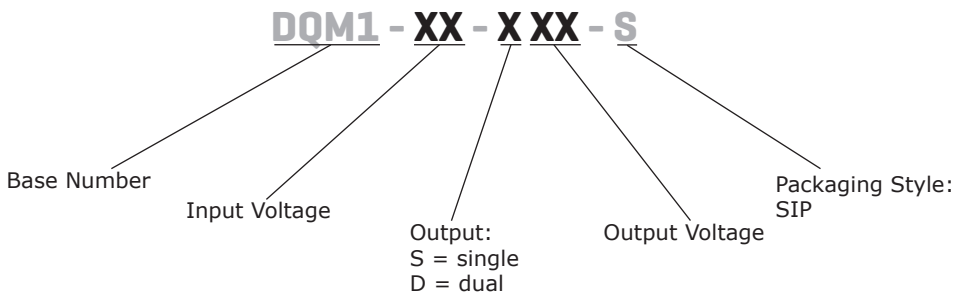

chanhvinh.com

INPUT

parameter	conditions/description	min	typ	max	units
input current (full load/no load)	3.3 Vdc input models		370/12	390/15	mA
	5 Vdc input, 12 Vdc output model		225/18	255/-	mA
	5 Vdc input, all other output models		230/10	260/15	mA
	12 Vdc input models		99/7	105/15	mA
	15 Vdc input models		78/5	95/15	mA
	24 Vdc input models		51/3	85/15	mA
reflected ripple current			15		mA
surge	for 1 second maximum				
	3.3 Vdc input models	-0.7		5	Vdc
	5 Vdc input models	-0.7		9	Vdc
	12 Vdc input models	-0.7		18	Vdc
	15 Vdc input models	-0.7		21	Vdc
	24 Vdc input models	-0.7		30	Vdc
filter	capacitance filter				

OUTPUT

parameter	conditions/description	min	typ	max	units
maximum capacitive load	3.3, 5 Vdc output models			4,000	µF
	±3, ±5, 9, Vdc output models			2,000	µF
	±9, 12 Vdc output models			1,000	µF
	15 Vdc output models			680	µF
	±12, 24 Vdc output models			560	µF
	±15 output models			220	µF
	±24 output models			100	µF
line regulation	input voltage variation ±1%				
	3.3 Vdc output models		±1.5		%
	all other output models		±1.2		%
load regulation	10% ~ 100% load				
	3.3 Vdc output models		10		%
	5, 9 Vdc output models		8		%
	12 Vdc output models		7		%
	15, 24 Vdc output models		6		%
temperature coefficient	at full load		±0.03		%/°C
voltage accuracy	see regulation curves				
switching frequency	at Vin nominal, full load		220		kHz

PROTECTIONS

parameter	conditions/description	min	typ	max	units
short circuit protection	continuous, auto recovery				

SAFETY AND COMPLIANCE

parameter	conditions/description	min	typ	max	units
isolation voltage	input to output for 1 minute, 1mA max	3,000			Vdc
isolation capacitance	input-output, 100kHz/0.1V		20		pF
safety approvals	certified to 62368-1: EN, UL[6]				
EMC/EMI	CISPR32/EN55032 CLASS B (see recommended Fig. 3 & 4)				
ESD	EN 61000-4-2 contact: ±4 kV, air: ±8 kV, perf. Criteria B				
MTBF	as per MIL-HDBK-217F, at 25°C	3,500,000			hours
RoHS	yes				

Notes: 6. Only 5Vin & 12Vin models are UL recognized.

chanhvinh.com

ENVIRONMENTAL

parameter	conditions/description	min	typ	max	units
operating temperature	see derating curve	-40		105	°C
storage temperature		-55		125	°C
operating humidity	non-condensing	-		95	%
case temperature rise	at 25°C		25		°C

SOLDERABILITY

parameter	conditions/description	min	typ	max	units
pin soldering temperature	soldering spot is 1.5mm away for 10 seconds			300	°C

MECHANICAL

parameter	conditions/description	min	typ	max	units
dimensions	19.60 x 6.00 x 10.10				mm
case material	UL94V-0 black plastic, flame retardant, heat resistant				
weight			2.1		g
cooling	natural convection				

MECHANICAL DRAWING

units: mm [inch]
pin tolerance: ±0.10 [±0.004]
general tolerance: ±0.50 [±0.020]

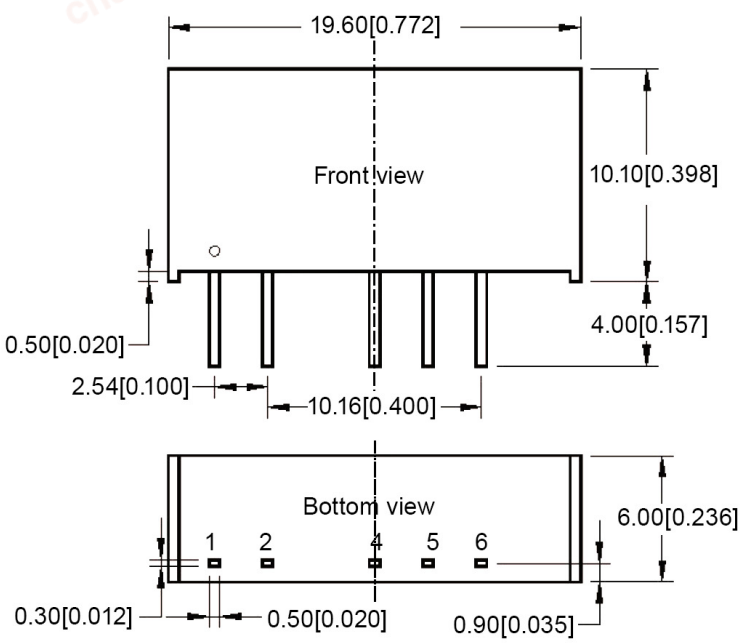

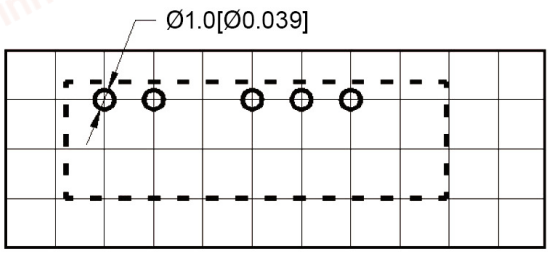

Note:The grid distance is 2.54*2.54 mm

PIN CONNECTIONS		
PIN	Single	Dual
1	Vin	Vin
2	GND	GND
4	-Vo	-Vo
5	no pin	COM
6	+Vo	+Vo

chanhvinh.com

DERATING CURVES

TEMPERATURE DERATING CURVE (natural convection)

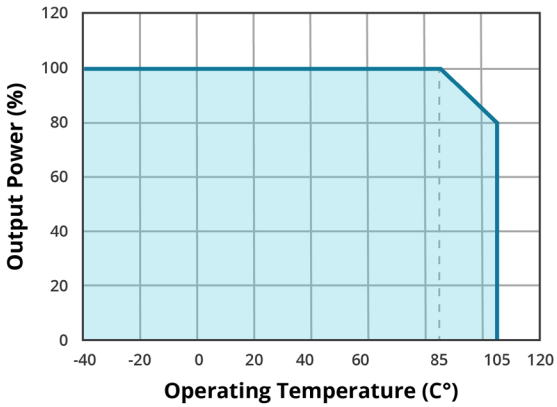

OUTPUT REGULATION CURVE 3.3 Vdc output model (nominal input)

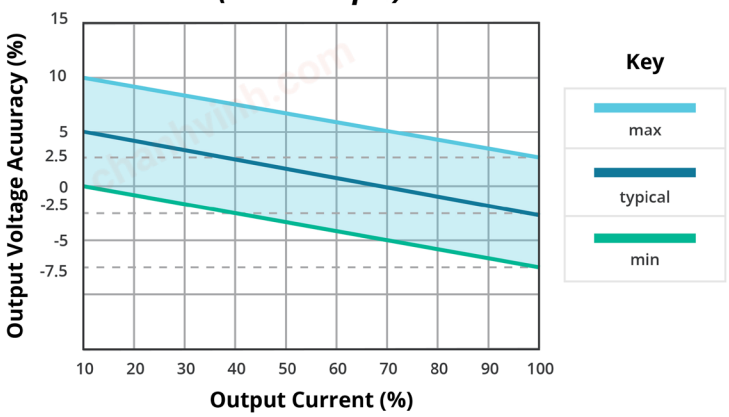

OUTPUT REGULATION CURVE all other output models (nominal input)

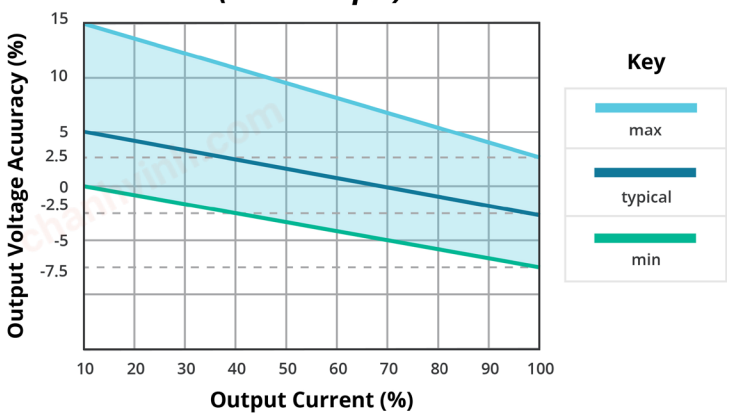

EFFICIENCY CURVES

EFFICIENCY VS INPUT VOLTAGE (full load)

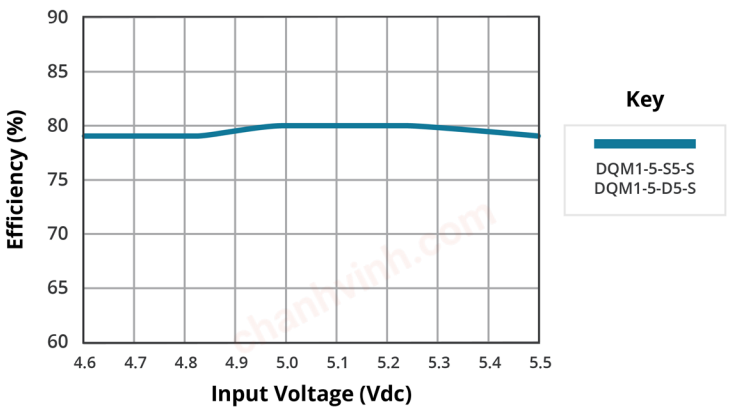

EFFICIENCY VS OUTPUT CURRENT (Vin = 5V)

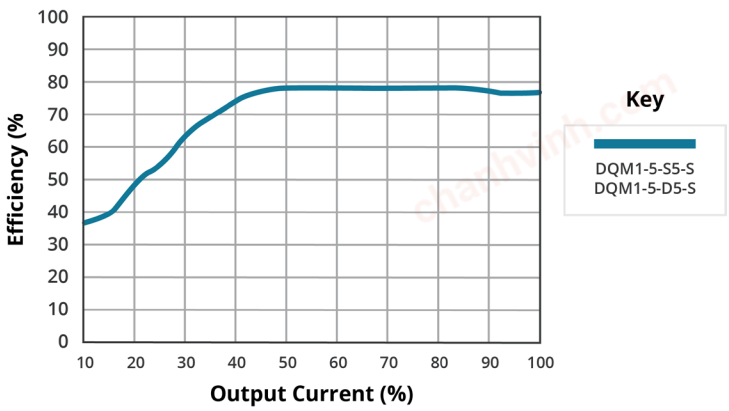

chanhvinh.com

APPLICATION CIRCUIT

Typical Application
To further minimize input and output ripple, a capacitor filtering network can be connected to the input and output terminals. The recommended application circuits are illustrated in Figure 1 & 2. It is important to select an appropriate filter capacitor; excessive capacitance may lead to start-up issues. For safe and reliable operation, refer to Table 1 & 2 for the recommended capacitive load values for each output.

EMC Recommendations
For typical EMC performance, refer to the recommended circuit shown in Figure 3 & 4.

Output Load Requirements
To ensure efficient and reliable module operation, the minimum output load should be at least 10% of the rated load. If the actual power requirement is lower, connect a resistor in parallel with the output. The combined power consumption (resistor plus actual load) must be greater than or equal to 10% of the rated output power.

Figure 1
Single output

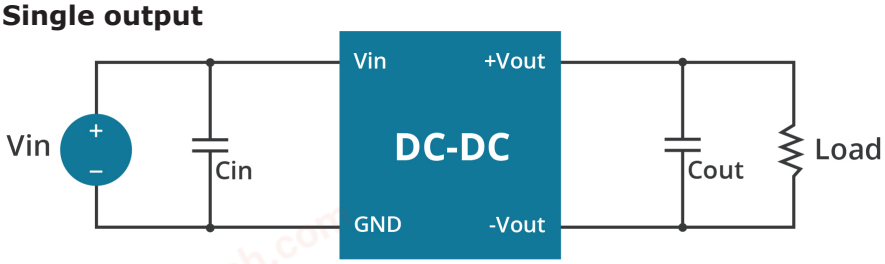

Table 1

Recommended Values			
Vin	Cin	Vout	Cout
3.3/5	4.7µF/16V	3.3/5	10µF/16V
12	2.2µF/25V	9	4.7µF/16V
15	2.2µF/25V	12	2.2µF/25V
24	1.0µF/50V	15	1.0µF/25V
-	-	24	0.47µF/50V

Figure 2
Dual output

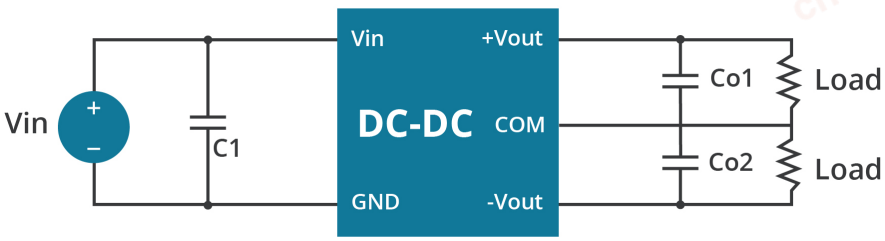

Table 2

Recommended Values			
Vin	Cin	Vout	Cout
3.3/5	4.7µF/16V	3.3/5	10µF/16V
12	2.2µF/25V	9	4.7µF/16V
15	2.2µF/25V	12	2.2µF/25V
24	1.0µF/50V	15	1.0µF/25V
-	-	24	0.47µF/50V

chanhvinh.com

EMI RECOMMENDED CIRCUIT

Figure 3
Single output

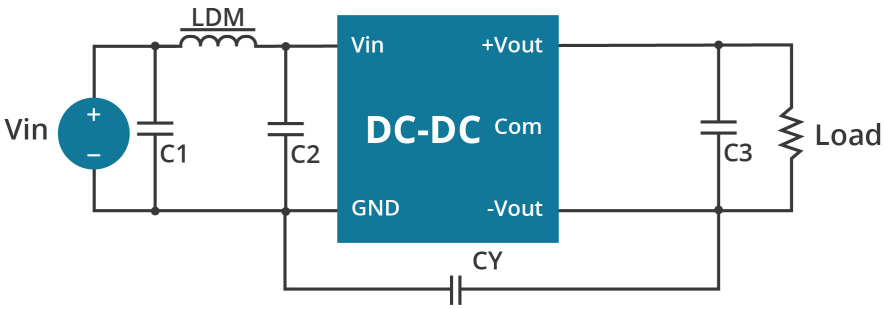

Table 3

Recommended Values	
C1, C2	10µF/50V
C3	refer to Figure/Table 1
CY	1,000pF/3kV
LDM	6.8µH

Figure 4
Dual output

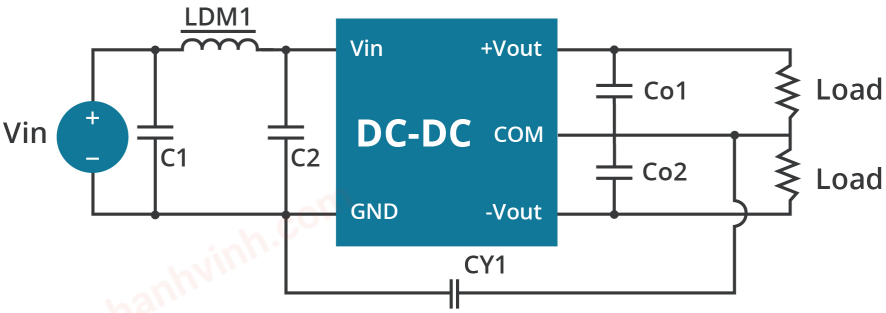

Table 4

Recommended Values	
C1, C2	4.7µF/50V
Co1, Co2	refer to Figure/Table 2
CY1	1,000pF/3kV
LDM1	6.8µH

chanhvinh.com

REVISION HISTORY

rev.	description	date
1.0	initial release	01/20/2026
1.01	UL added to 12 Vin models	11/03/2026

The revision history provided is for informational purposes only and is believed to be accurate.

CUI INC
a bel group

15575 SW Sequoia Pkwy #100
Portland, OR 97224
800.275.4899

Fax 503.612.2383
Belfuse.com
powersupport@belf.com

CUI offers a two (2) year limited warranty. Complete warranty information is listed on our website.

CUI reserves the right to make changes to the product at any time without notice. Information provided by CUI is believed to be accurate and reliable. However, no responsibility is assumed by CUI for its use, nor for any infringements of patents or other rights of third parties which may result from its use.

CUI products are not authorized or warranted for use as critical components in equipment that requires an extremely high level of reliability. A critical component is any component of a life support device or system whose failure to perform can be reasonably expected to cause the failure of the life support device or system, or to affect its safety or effectiveness.