chanhvinh.com

AC-DC Power Supplies Medical Type

Medical electric equipment | World wide | Cost Effective | Safety Approvals | EMI | Inrush current limiting | OCP | OVP

COSEL

UMPS-series

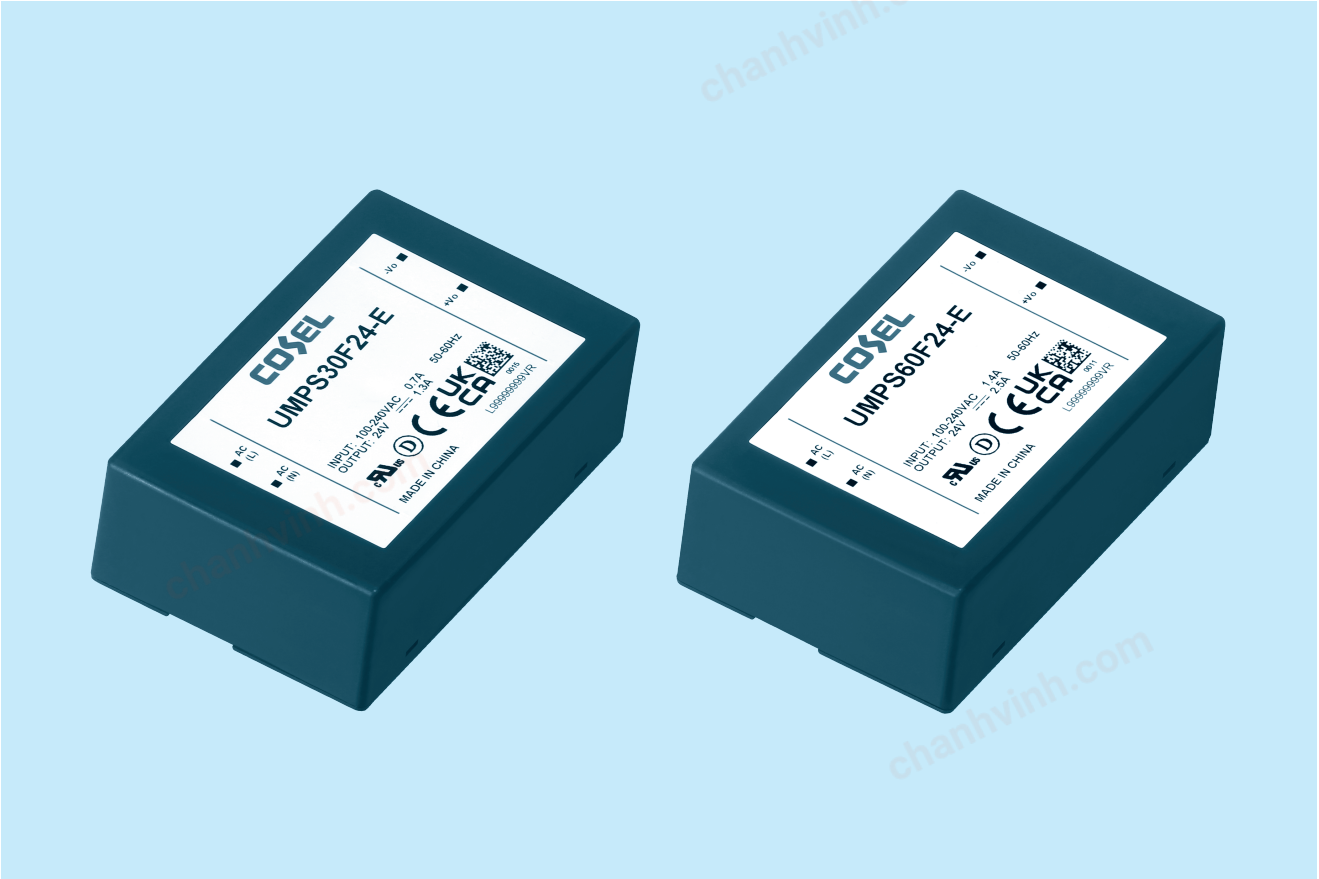

Feature

For medical electric equipment
Medical Isolation Grade 2MOPP
4kV isolation
Suitable for BF application
Low leakage current
Economical design
Class II

Safety agency approvals

ANSI/AAMI ES60601-1, EN60601-1 3rd,
C-UL (CAN/CSA-C22.2 No.60601-1),
UL62368-1, EN62368-1,
C-UL (CAN/CSA-C22.2 No.62368-1)
Complies with IEC60335-1

CE marking

Low Voltage Directive
RoHS Directive

UKCA marking

Electrical Equipment Safety Regulations
RoHS Regulations

5-year warranty (Refer to Instruction Manual)

EMI

Complies with CISPR11-B, CISPR32-B, EN55011-B, EN55032-B,
FCC Part 15-B, FCC Part 18-B

EMS Compliance : EN61204-3, EN61000-6-2

IEC60601-1-2 (2014), EN60601-1-2 (2015)

EN61000-4-2
EN61000-4-3
EN61000-4-4
EN61000-4-5
EN61000-4-6
EN61000-4-8
EN61000-4-11

chanhvinh.com

COSEL AC-DC Power Supplies Medical Type

UMPS30F

Ordering information

UMP ① S ② 30 ③ F ④ □□ ⑤ -□ ⑧



RoHS

□ClassII

①Series name
②Single output
③Output wattage
④Universal input
⑤Output voltage
⑧Optional

*Make sure necessary tests will be carried out on your end equipment with the power supply installed in accordance with any required EMC/EMI regulations.

MODEL	UMPS30F05-E	UMPS30F12-E	UMPS30F24-E	UMPS30F48-E
MAX OUTPUT WATTAGE[W]	15	30	31.2	31.2
DC OUTPUT	5V 3A	12V 2.5A	24V 1.3A	48V 0.65A

SPECIFICATIONS

	MODEL		UMPS30F05-E	UMPS30F12-E	UMPS30F24-E	UMPS30F48-E
INPUT	VOLTAGE[V]		AC85 - 264 1φ			
	CURRENT[A]	ACIN 115V	0.35	0.7		
		ACIN 230V	0.15	0.3		
	FREQUENCY[Hz]		50/60 (47-63)			
	EFFICIENCY[%]	ACIN 115V	81typ	86typ	88typ	88typ
		ACIN 230V	80typ	87typ	89typ	89typ
	INRUSH CURRENT[A]	ACIN 115V	25typ			
		ACIN 230V	50typ			
	LEAKAGE CURRENT[uA]	ACIN 264V	200max			
	TOUCH CURRENT[uA]	ACIN 264V	75max			
OUTPUT	VOLTAGE[V]		5	12	24	48
	CURRENT[A]		3	2.5	1.3	0.65
	WATTAGE[W]		15	30	31.2	31.2
	LINE REGULATION[mV] *1		20max	48max	96max	192max
	LOAD REGULATION[mV] *1		100max	120max	150max	240max
	RIPPLE NOISE [mVp-p] *2	Io=100%	150 (Bandwidth 20MHz)			
	TEMPERATURE REGULATION[mV]	0~+45℃	100max	120max	240max	480max
	START-UP TIME[ms]	ACIN 115V	40typ			
		ACIN 230V				
	HOLD-UP TIME[ms]	ACIN 115V	20typ			
		ACIN 230V	100typ			
	OUTPUT VOLTAGE SETTING[V]		4.90 to 5.30	11.50 to 12.50	23.00 to 25.00	46.00 to 50.00
PROTECTION CIRCUIT AND OTHERS	OVERCURRENT PROTECTION [A]		Works over 105% of rating and recovers automatically			
	OVERVOLTAGE PROTECTION[V]		5.75 to 7.00	13.80 to 16.80	27.60 to 33.60	55.20 to 67.20
ISOLATION	INPUT-OUTPUT		AC4,000V 1minute, DC500V 100MΩmin (At Room Temperature) 2MOPP			
ENVIRONMENT	OPERATING TEMP.,HUMID. *3		-20 to +70℃, 20 - 90%RH (Non condensing)			
	STORAGE TEMP.,HUMID.		-20 to +75℃, 20 - 90%RH (Non condensing)			
	VIBRATION		10 - 55Hz, 19.6m/s² (2G), 3minutes period, 60minutes each along X, Y and Z axis			
	IMPACT		196.1m/s² (20G), 11ms, once each X, Y and Z axis			
SAFETY AND EMC	AGENCY APPROVALS		UL62368-1, C-UL (equivalent to CAN/CSA-C22.2 No.62368-1), EN62368-1, ANSI/AAMI ES60601-1, C-UL (equivalent to CAN/CSA-C22.2 No.60601-1), EN60601-1 3rd, Complies with IEC60335-1			
	EMC EMISSON		Complies with CISPR11-B, CISPR32-B, EN55011-B, EN55032-B, FCC Part 15-B, FCC Part 18-B			
	EMC EMMUNITY		Complies with EN61000-4-2, 3, 4, 5, 6, 8, 11			
	HARMONIC ATTENUATOR *5		Complies with IEC61000-3-2 (Class A) No built-in active PFC			
OTHERS	CASE SIZE/WEIGHT		55.9×30.5×81.3mm [2.2×1.2×3.2 inches] (W×H×D) / 170g max			
	COOLING METHOD		Convection			
WARRANTY	WARRANTY *4		5 years (subject to the operating conditions)			

*1 Consult us about dynamic load and input response. Measure the output voltage by using the average mode of the tester to deal with the burst operation at low (Io=0~20%typ) load.
*2 This is the result of measurement of the testing board with capacitors of 47μF and 0.1μF placed at 50 mm from the output terminals by a 20MHz oscilloscope or a ripple-noise meter equivalent to Keisoku-GikenRM104.
When the load factor is low (Io=0~20%typ), the switching power loss is reduced by burst operation, which will cause ripple noise to go beyond the specifications.
*3 Output power derating is required. Refer to "Derating"
*4 Consult us about details.
*5 Please contact us about another class. When two or more units are operating it may not comply with the IEC61000-3-2. Please contact us for details.
* All parameters not specially mentioned are measured at ACIN 230V, rated load and 25℃ of ambient temperature.
* Do not use the power supply in overcurrent conditions or in unspecified input voltage ranges. Otherwise the internal components may be damaged.
* Parallel operation is not possible with this model.
* Acoustic noise may be heard from the power supply when used for pulse load.

chanhvinh.com

External view

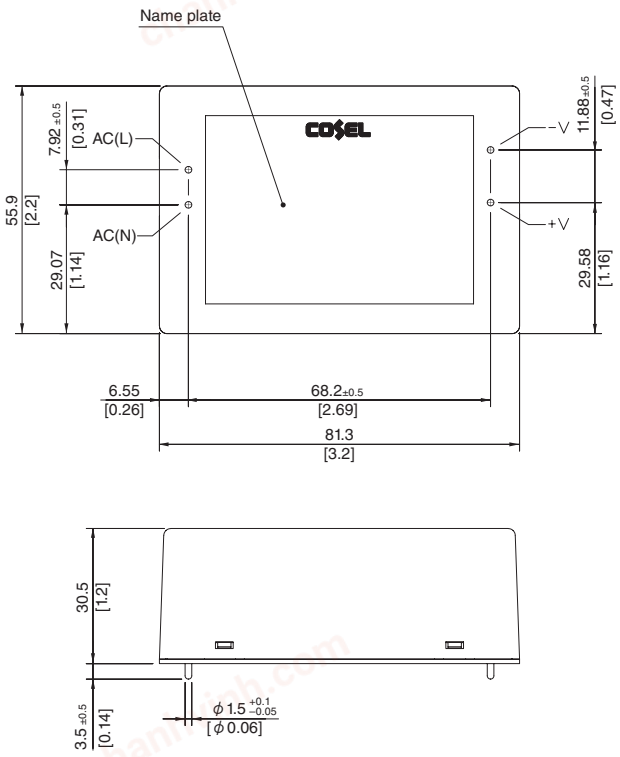

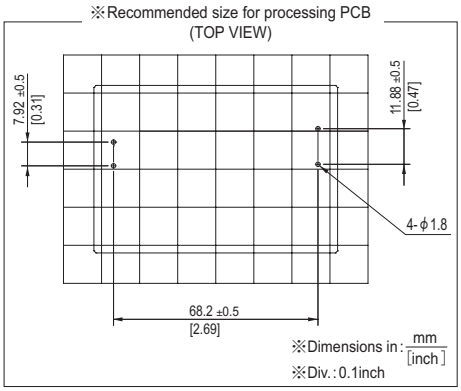

※ Dimensions in mm, [ ] = inches
※ Tolerance : ±1 [±0.04]
※ Weight : 170g max
※ Pin terminal material : Copper
※ Plating treatment of terminal : Lead free plating
※ Case material :PBT

Derating Curve

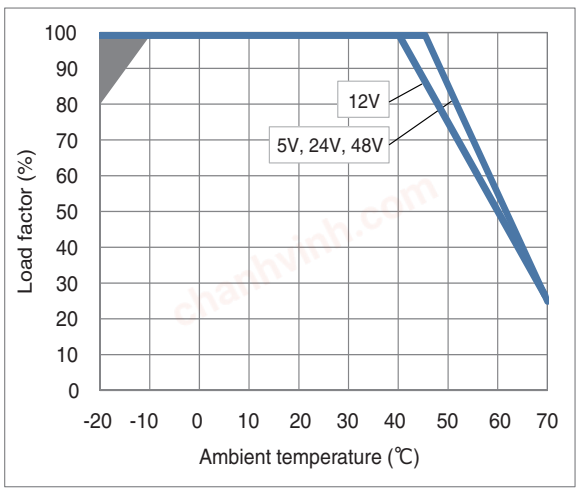

*The shaded area is the derating required at start-up.

Fig.1 Derating curve depending on ambient temperature

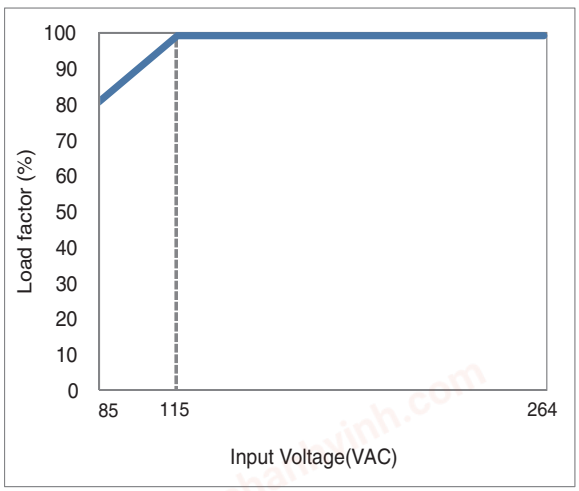

Fig.2 Derating curve depending on input voltage

■The ambient temperature should be measured 5 to 10 cm away from the power supply so that it won't be inluenced by the heat from the power supply.Please consult us for more details.

chanhvinh.com

COSEL AC-DC Power Supplies Medical Type

UMPS60F

Ordering information

UMP ① S ② 60 ③ F ④ □□ ⑤ -□ ⑧



①Series name
②Single output
③Output wattage
④Universal input
⑤Output voltage
⑧Optional

*Make sure necessary tests will be carried out on your end equipment with the power supply installed in accordance with any required EMC/EMI regulations.

MODEL	UMPS60F05-E	UMPS60F12-E	UMPS60F24-E	UMPS60F48-E
MAX OUTPUT WATTAGE[W]	30	54	60	60
DC OUTPUT	5V 6A	12V 4.5A	24V 2.5A	48V 1.25A

SPECIFICATIONS

	MODEL		UMPS60F05-E	UMPS60F12-E	UMPS60F24-E	UMPS60F48-E
INPUT	VOLTAGE[V]		AC85 - 264 1φ			
	CURRENT[A]	ACIN 115V	0.7	1.4		
		ACIN 230V	0.3	0.7		
	FREQUENCY[Hz]		50/60 (47-63)			
	EFFICIENCY[%]	ACIN 115V	80typ	87typ	88typ	89typ
		ACIN 230V	80typ	88typ	90typ	91typ
	INRUSH CURRENT[A]	ACIN 115V	25typ			
		ACIN 230V	50typ			
	LEAKAGE CURRENT[uA]	ACIN 264V	200max			
	TOUCH CURRENT[uA]	ACIN 264V	75max			
OUTPUT	VOLTAGE[V]		5	12	24	48
	CURRENT[A]		6	4.5	2.5	1.25
	WATTAGE[W]		30	54	60	60
	LINE REGULATION[mV]	*1	20max	48max	96max	192max
	LOAD REGULATION[mV]	*1	100max	120max	150max	240max
	RIPPLE NOISE [mVp-p]	*2 Io=100%	150 (Bandwidth 20MHz)			
	TEMPERATURE REGULATION[mV]	0~+40℃	100max	120max	240max	480max
	START-UP TIME[ms]	ACIN 115V	40typ			
		ACIN 230V				
	HOLD-UP TIME[ms]	ACIN 115V	20typ			
		ACIN 230V	100typ			
	OUTPUT VOLTAGE SETTING[V]		4.90 to 5.30	11.50 to 12.50	23.00 to 25.00	46.00 to 50.00
PROTECTION CIRCUIT AND OTHERS	OVERCURRENT PROTECTION [A]		Works over 105% of rating and recovers automatically			
	OVERVOLTAGE PROTECTION[V]		5.75 to 7.00	13.80 to 16.80	27.60 to 33.60	55.20 to 67.20
ISOLATION	INPUT-OUTPUT		AC4,000V 1minute, DC500V 100MΩmin (At Room Temperature) 2MOPP			
ENVIRONMENT	OPERATING TEMP.,HUMID.	*3	-20 to +70℃, 20 - 90%RH (Non condensing)			
	STORAGE TEMP.,HUMID.		-20 to +75℃, 20 - 90%RH (Non condensing)			
	VIBRATION		10 - 55Hz, 19.6m/s² (2G), 3minutes period, 60minutes each along X, Y and Z axis			
	IMPACT		196.1m/s² (20G), 11ms, once each X, Y and Z axis			
SAFETY AND EMC	AGENCY APPROVALS		UL62368-1, C-UL (equivalent to CAN/CSA-C22.2 No.62368-1), EN62368-1, ANSVAAMI ES60601-1, C-UL (equivalent to CAN/CSA-C22.2 No.60601-1), EN60601-1 3rd, Complies with IEC60335-1			
	EMC EMISSON		Complies with CISPR11-B, CISPR32-B, EN55011-B, EN55032-B, FCC Part 15-B, FCC Part 18-B			
	EMC EMMUNITY		Complies with EN61000-4-2, 3, 4, 5, 6, 8, 11			
	HARMONIC ATTENUATOR	*5	Complies with IEC61000-3-2 (Class A) No built-in active PFC			
OTHERS	CASE SIZE/WEIGHT		55.9×30.5×81.3mm [2.2×1.2×3.2 inches] (W×H×D) / 200g max			
	COOLING METHOD		Convection			
WARRANTY	WARRANTY	*4	5 years (subject to the operating conditions)			

*1 Consult us about dynamic load and input response. Measure the output voltage by using the average mode of the tester to deal with the burst operation at low (Io=0~20%typ) load.
*2 This is the result of measurement of the testing board with capacitors of 47μF and 0.1μF placed at 50 mm from the output terminals by a 20MHz oscilloscope or a ripple-noise meter equivalent to Keisoku-GikenRM104.
When the load factor is low (Io=0~20%typ), the switching power loss is reduced by burst operation, which will cause ripple noise to go beyond the specifications.
*3 Output power derating is required. Refer to "Derating"
*4 Consult us about details.
*5 Please contact us about another class. When two or more units are operating it may not comply with the IEC61000-3-2. Please contact us for details.
* All parameters not specially mentioned are measured at ACIN 230V, rated load and 25℃ of ambient temperature.
* Do not use the power supply in overcurrent conditions or in unspecified input voltage ranges. Otherwise the internal components may be damaged.
* Parallel operation is not possible with this model.
* Acoustic noise may be heard from the power supply when used for pulse load.

chanhvinh.com

External view

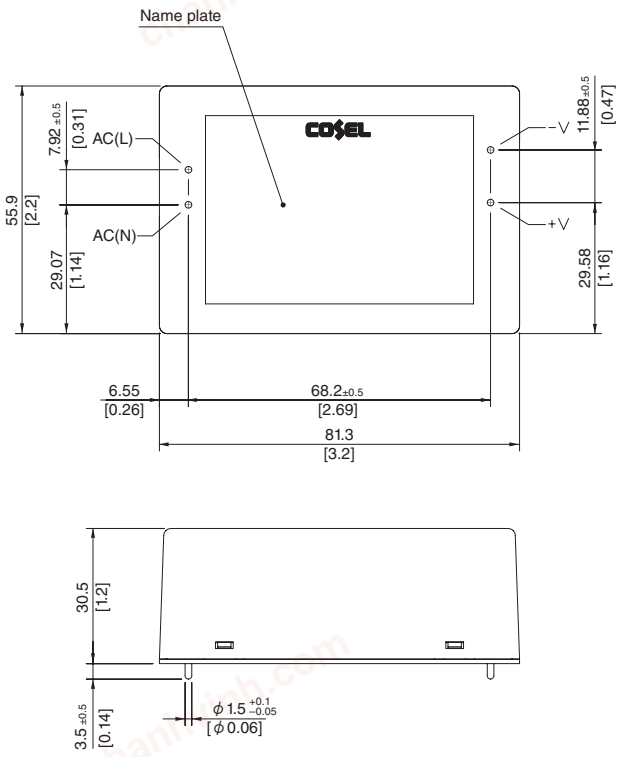

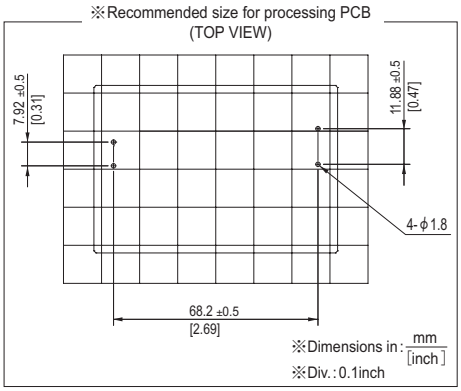

※ Dimensions in mm, [ ] = inches
※ Tolerance : ±1 [±0.04]
※ Weight : 200g max
※ Pin terminal material : Copper
※ Plating treatment of terminal : Lead free plating
※ Case material :PBT

Derating Curve

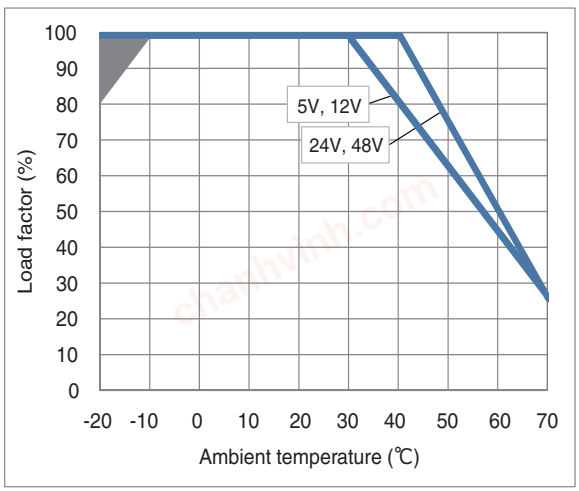

*The shaded area is the derating required at start-up.

Fig.1 Derating curve depending on ambient temperature

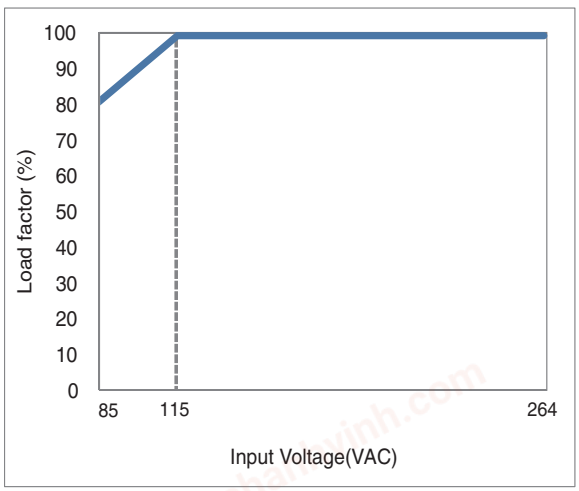

Fig.2 Derating curve depending on input voltage

■The ambient temperature should be measured 5 to 10 cm away from the power supply so that it won't be inluenced by the heat from the power supply.Please consult us for more details.

chanhvinh.com

Pin Configuration

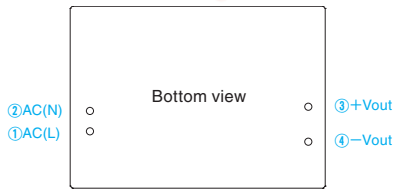

No.	Pin connection	Function
①	AC(L)	AC input
②	AC(N)	
③	+Vout	+DC output
④	−Vout	−DC output

Implementation・Mounting Method

Mounting method

■AC voltage exists on the primary side. Therefore, in order to prevent electric shock, or to meet the leakage current requirements of the safety standard, you need to secure an insulation distance of at least 5mm.

■When two or more power supplies are used side by side, position them with proper intervals to allow enough air ventilation. The temperature around each power supply should not exceed the temperature range shown in derating curve.

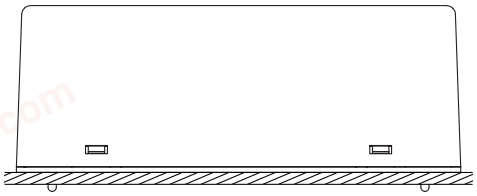

■Avoid placing the AC input line pattern layout underneath the unit.It will increase the line conducted noise. Make sure to leave an ample distance between the line pattern layout and the unit. Also avoid placing the DC output line pattern underneath the unit because it may increase the output noise. Lay out the pattern away from the unit.

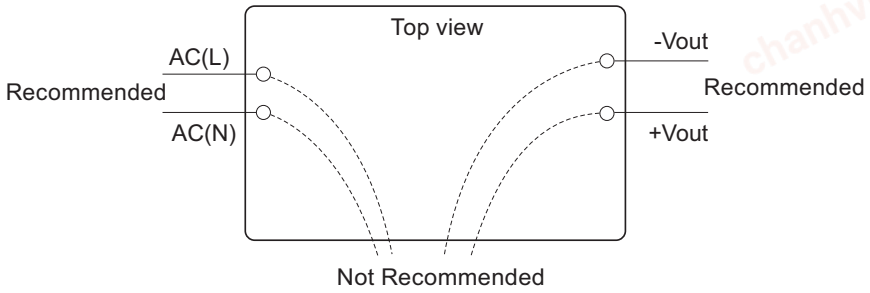

Soldering

■Flow soldering: 260℃ for up to 10 seconds.

■Soldering iron (70W): 360℃ for up to 5 seconds.

Stress to the pins

■Input/output pin are soldered to the PCB internally.Do not pull or push a lead powerfully.

■Applying excessive stress to the input or output pins of the unit may damage internal connections. Avoid applying stress in excess of that shown in the figure on the right.

■If it is expected that stress is applied to the input/output pin due to vibration or impact, reduce the stress to the pin by taking such measures as fixing the unit to the PCB by silicone rubber, etc.

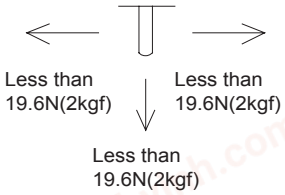

chanhvinh.com

Instruction Manual

■Please read the “Instruction Manual” and “Before using our product” before you use our product.

Basic Characteristics Data

Model	Circuit method	Switching frequency [kHz]	Input current [A]	Rated input fuse	Inrush current protection circuit	PCB/Pattern			Parallel operation
						Material	Single sided	Double sided	
UMPS30F	Flyback converter	20 to 125	0.7	250V 2.5A	Thermistor	CEM-3	Yes		No
UMPS60F	Flyback converter	20 to 125	1.4	250V 2.5A	Thermistor	FR4		Yes	No