chanhvinh.com

COSEL AC-DC Power Supplies Bus Converter·Power Module Type

DPG

Ordering information

DPG 750

① ②

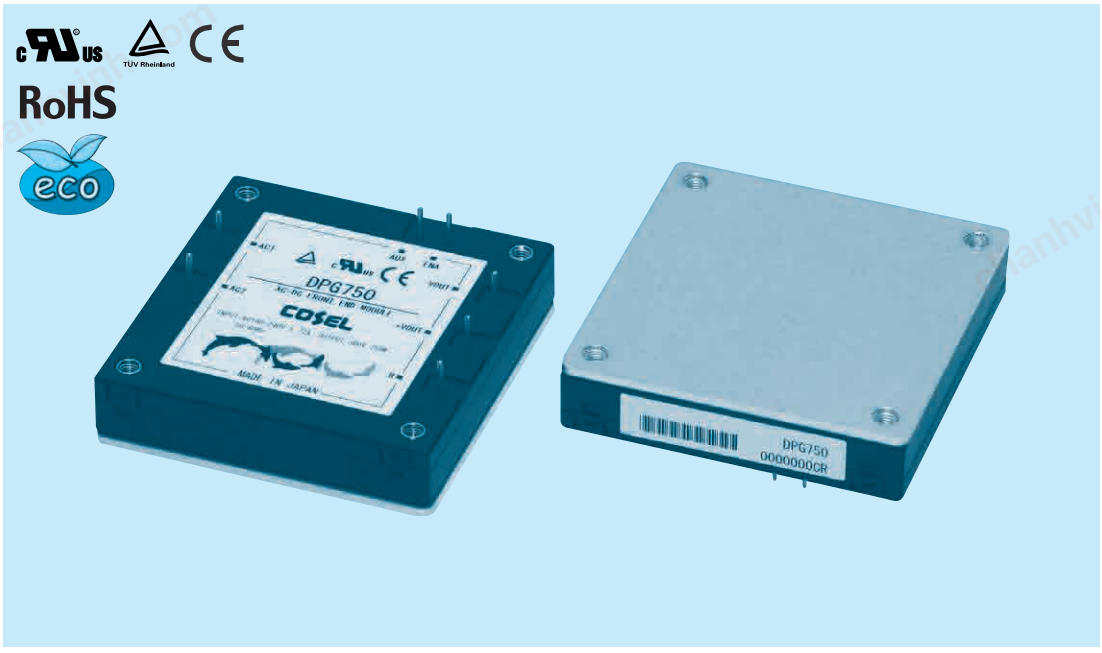

①Series name
②Output power
500 : 500W (ACIN 200V)
750 : 750W (ACIN 200V)

MODEL	DPG500		DPG750	
AC INPUT[V]	AC85 - 264	AC170 - 264	AC85 - 264	AC170 - 264
MAX OUTPUT WATTAGE[W] ∗1	300	500	500	750
DC OUTPUT VOLTAGE[V] ∗2	360			

SPECIFICATIONS

	MODEL	DPG500		DPG750	
INPUT	VOLTAGE[V]	AC85 - 264 1φ	AC170 - 264 1φ	AC85 - 264 1φ	AC170 - 264 1φ
	POWER FACTOR CORRECTION RANGE[V]	AC85 - 264 1φ			
	CURRENT[A]	3.47typ (ACIN 100V)	2.86typ (ACIN 200V)	5.72typ (ACIN 100V)	4.24typ (ACIN 200V)
	FREQUENCY[Hz]	50/60 (47 - 63) Hz			
	INRUSH CURRENT[A]	Limited by external resistance			
	EFFICIENCY[%]	92typ (ACIN 100V)	95typ (ACIN 200V)	93typ (ACIN 100V)	96typ (ACIN 200V)
	POWER FACTOR	0.96typ (ACIN 100V)	0.93typ (ACIN 200V)	0.96typ (ACIN 100V)	0.93typ (ACIN 200V)
	LEAKAGE CURRENT[mA]	0.75 max (60Hz, According to IEC60950 and DEN-AN)			
OUTPUT	WATTAGE[W] ∗1	300	500	500	750
	VOLTAGE[V] ∗2	360			
	VOLTAGE ACCURACY ∗3	±2%			
PROTECTION CIRCUIT AND OTHERS	OVERVOLTAGE PROTECTION[V]	DC400 - 450V The power factor corrector function stops			
	ENA ∗4	Enable signal, Open-drain output, Maximum sink current 10mA, Maximum allowance voltage 35V			
	OTHERS ∗5	Parallel operation impossible , Thermal protection			
ISOLATION	INPUT-OUTPUT	Non isolated			
	INPUT, OUTPUT-FG	AC2,800V 1minute Cutoff current = 10mA, DC500V, 50MΩ min (20±15℃)			
ENVIRONMENT	OPERATING TEMP.,HUMID.AND ALTITUDE	-40 to +100℃ (On aluminum base plate), 20 - 95%RH (Non condensing) (Refer to DERATING CURVE) 3,000m (10,000feet) max			
	STORAGE TEMP.,HUMID.AND ALTITUDE	-40 to +100℃, 20 - 95%RH (Non condensing), 9,000m (30,000feet) max			
	VIBRATION	10 - 55Hz, 49.0m/s² (5G), 3minutes period, 60minutes each along X, Y and Z axis			
	IMPACT	196.1m/s² (20G), 11ms, once each along X, Y and Z axis			
SAFETY	AGENCY APPROVALS	UL60950-1, C-UL, EN60950-1, EN50178 Complies with DEN-AN and IEC60950-1			
	HARMONIC ATTENUATOR	Complies with IEC61000-3-2 ∗6			
OTHERS	CASE SIZE/WEIGHT	58.4×12.7×61mm [2.3×0.5×2.4 inches] (W×H×D) / 100g max			
	COOLING METHOD	Conduction cooling (e.g. heat radiation from the aluminum base plate to the attached heat sink)			

∗1 Refer to Input voltage derating.
∗2 When the input voltage is more than 240V, the output voltage becomes the value proportional to the input voltage.
∗3 The value included the output setting and the line regulation, the load regulation and the temperature regulation. However, the input voltage is less than 240V.
∗4 Refer to the instruction Manual.
∗5 The thermal protection stops the power factor corrector function and the ENA signal.
∗6 Please contact us about class C.

chanhvinh.com

External view

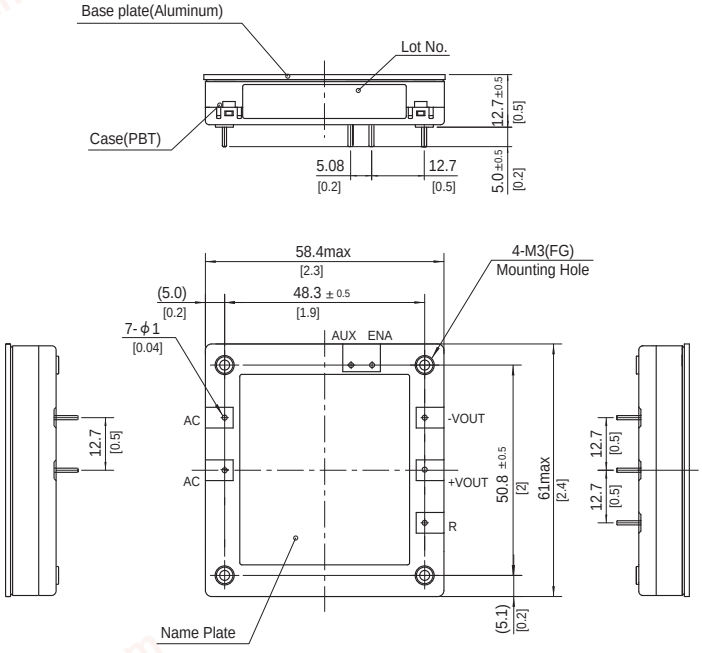

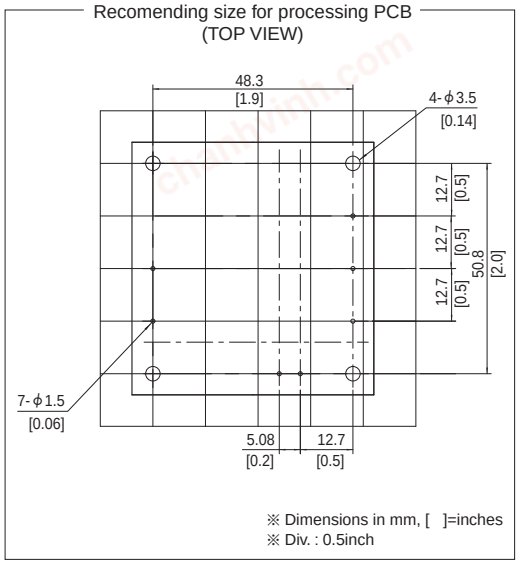

※ Tolerance : ±0.3 [±0.012]
※ Weight : 100g max
※ Dimensions in mm, [ ]=inches
※ Mounting hole screwing torque : 0.49N・m (5.0kgf・cm) max

Performance data

■STATIC CHARACTERISTICS (AC230V)

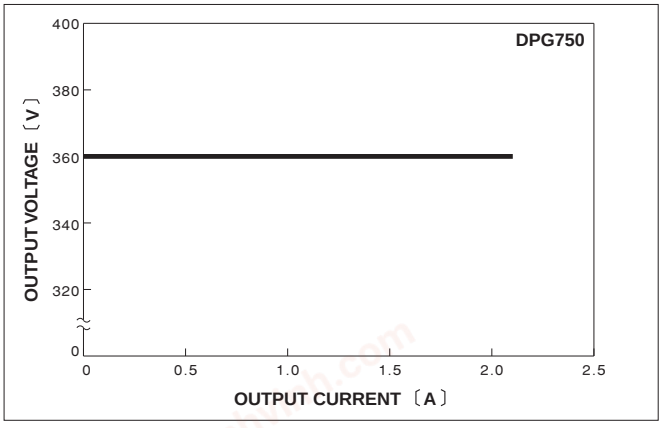

■OUTPUT VOLTAGE FOR INPUT

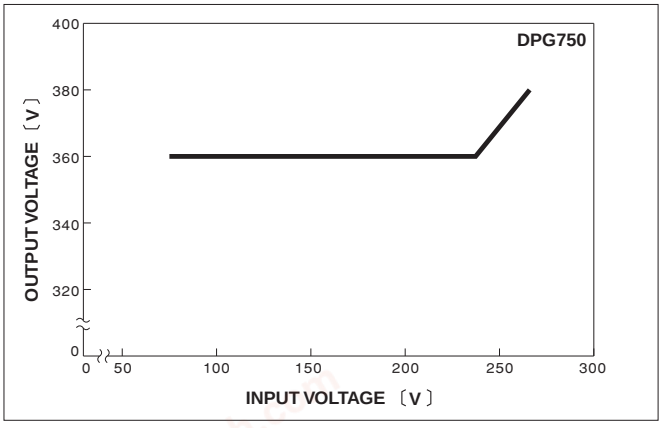

■HARMONIC CURRENT (AC100V)

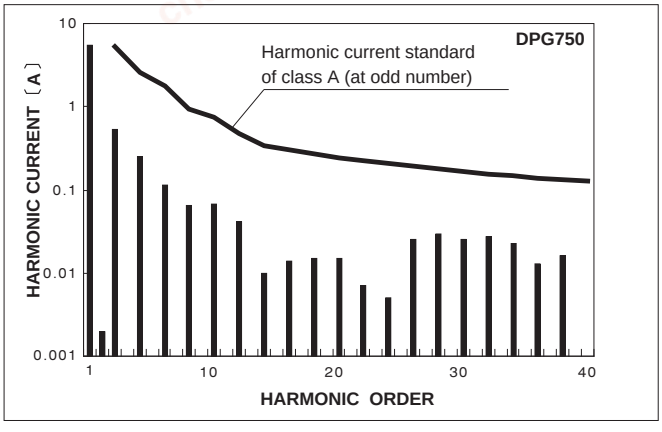

■HARMONIC CURRENT (AC230V)

