COSEL DC-DC Converters Bus Converter·Power Module Type

DHS50A

Ordering information

DH	S	50	A	05	-□
①	②	③	④	⑤	⑥

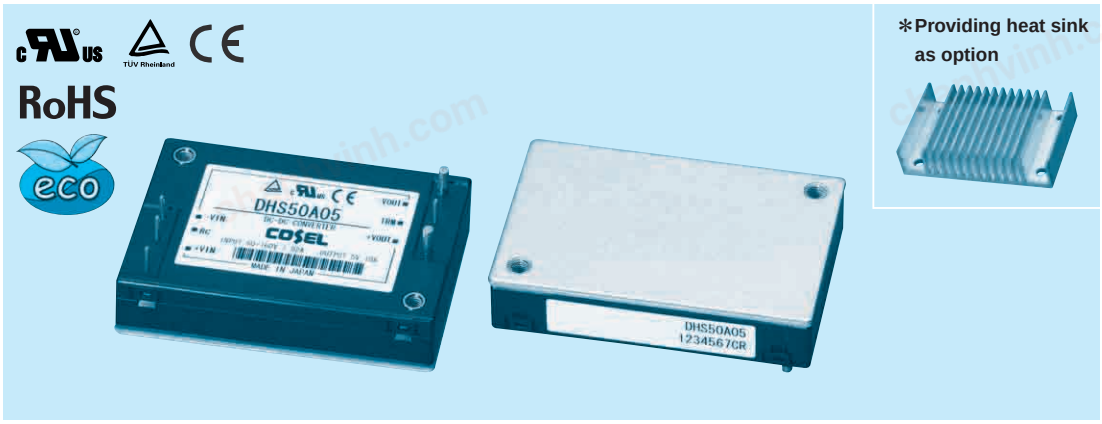

＊Providing heat sink as option

①Series name
②Single output
③Output wattage
④A : DC60-160V
⑤Output voltage
⑥Optional
T : with Mounting hole (φ3.4 thru)

MODEL	DHS50A05	DHS50A12	DHS50A15	DHS50A24
MAX OUTPUT WATTAGE[W]	50.0	50.4	51.0	50.4
DC OUTPUT	5V 10A	12V 4.2A	15V 3.4A	24V 2.1A

SPECIFICATIONS

	MODEL		DHS50A05	DHS50A12	DHS50A15	DHS50A24
INPUT	VOLTAGE[V]		DC60 - 160			
	CURRENT[A]	＊1	0.55A	0.55A	0.55A	0.55A
	EFFICIENCY[%]	＊1	84.0typ	86.0typ	86.0typ	86.0typ
OUTPUT	VOLTAGE[V]		5	12	15	24
	CURRENT[A]		10	4.2	3.4	2.1
	LINE REGULATION[mV]		10max	24max	30max	48max
	LOAD REGULATION[mV]		10max	24max	30max	48max
	RIPPLE[mVp-p]	0 to +100℃ ＊2	80max	120max	120max	120max
		-40 to 0℃ ＊2	120max	150max	150max	150max
		0 to 15% Load ＊2	160max	240max	240max	240max
	RIPPLE NOISE[mVp-p]	0 to +100℃ ＊2	120max	150max	150max	150max
		-40 to 0℃ ＊2	200max	200max	200max	250max
		0 to 15% Load ＊2	240max	300max	300max	300max
	TEMPERATURE REGULATION[mV]	0 to +65℃	50max	120max	150max	240max
		-40 to +100℃	100max	240max	300max	480max
	DRIFT[mV]	＊3	20max	40max	60max	90max
	START-UP TIME[ms]		200max (DCIN 110V, Io=100%)			
	OUTPUT VOLTAGE ADJUSTMENT RANGE[V] ＊4		Fixed (TRM pin open), adjustable by external VR or external voltage			
			4.50 - 6.00	10.80 - 13.20	13.50 - 16.50	21.60 - 26.40
	OUTPUT VOLTAGE SETTING[V]		4.97 - 5.13	11.91 - 12.29	14.76 - 15.24	23.62 - 24.38
PROTECTION CIRCUIT AND OTHERS	OVERCURRENT PROTECTION		Works over 105% of rating and recovers automatically			
	OVERVOLTAGE PROTECTION[V]		6.30 - 7.60	13.90 - 17.55	17.25 - 21.75	27.60 - 34.80
	REMOTE SENSING		nothing			
	REMOTE ON/OFF		Provided (Negative Logic L : ON, H :OFF)			
ISOLATION	INPUT-OUTPUT		AC3,000V 1minute, Cutoff current = 10mA, DC500V 50MΩ min (20±15℃)			
	INPUT-FG		AC2,000V 1minute, Cutoff current = 10mA, DC500V 50MΩ min (20±15℃)			
	OUTPUT-FG		AC500V 1minute, Cutoff current = 100mA, DC500V 50MΩ min (20±15℃)			
ENVIRONMENT	OPERATING TEMP.,HUMID.AND ALTITUDE		-40 to +100℃ (On aluminum base plate), 20 - 95%RH (Non condensing) (Refer to DERATING CURVE), 3,000m (10,000 feet) max			
	STORAGE TEMP.,HUMID.AND ALTITUDE		-40 to +100℃, 20 - 95%RH (Non condensing), 9,000m (30,000 feet) max			
	VIBRATION		10 - 55Hz, 49.0m/s² (5G), 3minutes period, 60minutes each along X, Y and Z axis Complies with IEC61373 Category 1 Class B			
	IMPACT		196.1m/s² (20G), 11ms, once each along X, Y and Z axis Complies with IEC61373 Category 1 Class B			
SAFETY	AGENCY APPROVALS		UL60950-1, C-UL (CSA60950-1), EN60950-1			
OTHERS	CASE SIZE/WEIGHT		58.4×12.7×37.3mm [2.3×0.5×1.47 inches] (W×H×D) / 60g max			
	COOLING METHOD		Conduction cooling (e.g. heat radiation from the aluminum base plate to the attached heat sink)			

＊1 At rated input(DC110V) and rated load.
＊2 Ripple and ripple noise is measured by using measuring board. Refer to the manual
＊3 Drift is the change in DC output for an eight hour period after a half-hour warm-up at 25℃, with the input voltage held constant at the rated input/output.
＊4 Refer to the manual for input range.

chanhvinh.com

External view

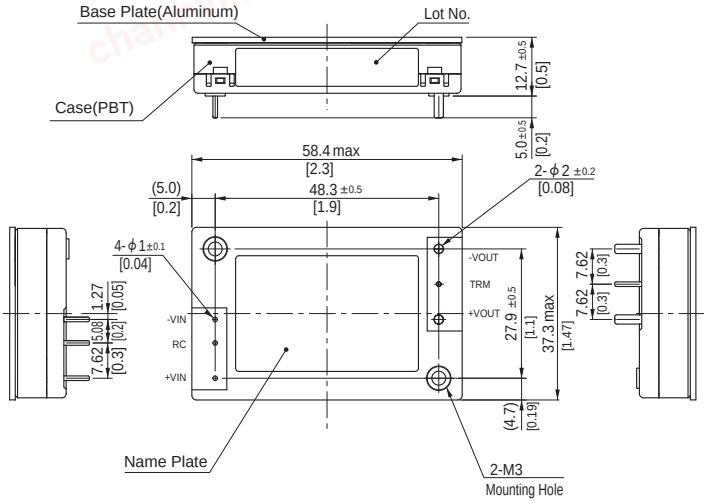

Recomending size for processing PCB
(TOP VIEW)

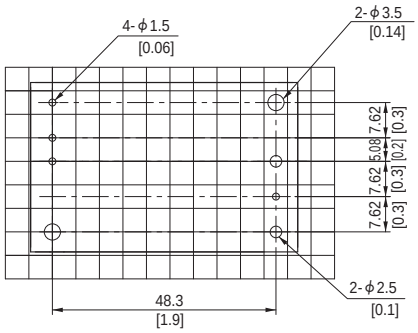

※ Dimensions in mm, [ ]=inches

※ Div. : 0.2inch

※ Tolerance : ±0.3 [±0.012]
※ Weight : 60g max
※ Dimensions in mm, [ ]=inches
※ Mounting hole screwing torque : 0.49N・m (5.0kgf・cm) max

DHS

chanhvinh.com

COSEL DC-DC Converters Bus Converter·Power Module Type

DHS100A

Ordering information

DH	S	100	A	05	-□
①	②	③	④	⑤	⑥



＊Providing heat sink as option

①Series name
②Single output
③Output wattage
④A : DC60-160V
⑤Output voltage
⑥Optional
T : with Mounting hole (φ3.4 thru)

MODEL	DHS100A05	DHS100A12	DHS100A15	DHS100A24
MAX OUTPUT WATTAGE[W]	100.0	100.8	100.5	100.8
DC OUTPUT	5V 20A	12V 8.4A	15V 6.7A	24V 4.2A

SPECIFICATIONS

	MODEL		DHS100A05	DHS100A12	DHS100A15	DHS100A24
INPUT	VOLTAGE[V]		DC60 - 160			
	CURRENT[A]	＊1	1.1A	1.1A	1.1A	1.1A
	EFFICIENCY[%]	＊1	85.0typ	88.0typ	88.0typ	88.0typ
OUTPUT	VOLTAGE[V]		5	12	15	24
	CURRENT[A]		20	8.4	6.7	4.2
	LINE REGULATION[mV]		10max	24max	30max	48max
	LOAD REGULATION[mV]		10max	24max	30max	48max
	RIPPLE[mVp-p]	0 to +100℃ ＊2	80max	120max	120max	120max
		-40 to 0℃ ＊2	120max	150max	150max	150max
		0 to 15% Load ＊2	160max	240max	240max	240max
	RIPPLE NOISE[mVp-p]	0 to +100℃ ＊2	120max	150max	150max	150max
		-40 to 0℃ ＊2	200max	200max	200max	250max
		0 to 15% Load ＊2	240max	300max	300max	300max
	TEMPERATURE REGULATION[mV]	0 to +65℃	50max	120max	150max	240max
		-40 to +100℃	100max	240max	300max	480max
	DRIFT[mV]	＊3	20max	40max	60max	90max
	START-UP TIME[ms]		200max (DCIN 110V, Io=100%)			
	OUTPUT VOLTAGE ADJUSTMENT RANGE[V] ＊4		Fixed (TRM pin open), adjustable by external VR or external voltage			
			4.50 - 6.00	10.80 - 13.20	13.50 - 16.50	21.60 - 26.40
	OUTPUT VOLTAGE SETTING[V]		4.97 - 5.13	11.91 - 12.29	14.76 - 15.24	23.62 - 24.38
PROTECTION CIRCUIT AND OTHERS	OVERCURRENT PROTECTION		Works over 105% of rating and recovers automatically			
	OVERVOLTAGE PROTECTION[V]		6.30 - 7.60	13.90 - 17.55	17.25 - 21.75	27.60 - 34.80
	REMOTE SENSING		nothing			
	REMOTE ON/OFF		Provided (Negative Logic L : ON, H :OFF)			
ISOLATION	INPUT-OUTPUT		AC3,000V 1minute, Cutoff current = 10mA, DC500V 50MΩ min (20±15℃)			
	INPUT-FG		AC2,000V 1minute, Cutoff current = 10mA, DC500V 50MΩ min (20±15℃)			
	OUTPUT-FG		AC500V 1minute, Cutoff current = 100mA, DC500V 50MΩ min (20±15℃)			
ENVIRONMENT	OPERATING TEMP.,HUMID.AND ALTITUDE		-40 to +100℃ (On aluminum base plate), 20 - 95%RH (Non condensing) (Refer to DERATING CURVE), 3,000m (10,000 feet) max			
	STORAGE TEMP.,HUMID.AND ALTITUDE		-40 to +100℃, 20 - 95%RH (Non condensing), 9,000m (30,000 feet) max			
	VIBRATION		10 - 55Hz, 49.0m/s² (5G), 3minutes period, 60minutes each along X, Y and Z axis Complies with IEC61373 Category 1 Class B			
	IMPACT		196.1m/s² (20G), 11ms, once each along X, Y and Z axis Complies with IEC61373 Category 1 Class B			
SAFETY	AGENCY APPROVALS		UL60950-1, C-UL (CSA60950-1), EN60950-1			
OTHERS	CASE SIZE/WEIGHT		58.4×12.7×37.3mm [2.3×0.5×1.47 inches] (W×H×D) / 60g max			
	COOLING METHOD		Conduction cooling (e.g. heat radiation from the aluminum base plate to the attached heat sink)			

＊1 At rated input(DC110V) and rated load.
＊2 Ripple and ripple noise is measured by using measuring board. Refer to the manual.
＊3 Drift is the change in DC output for an eight hour period after a half-hour warm-up at 25℃, with the input voltage held constant at the rated input/output.
＊4 Refer to the manual for input range.

chanhvinh.com

External view

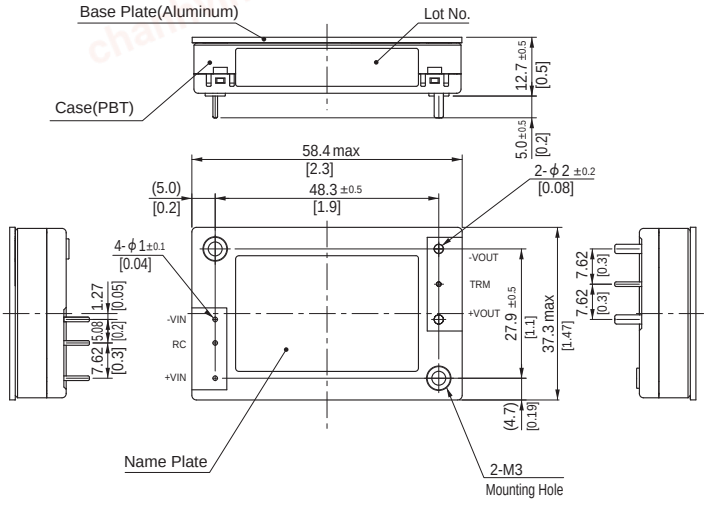

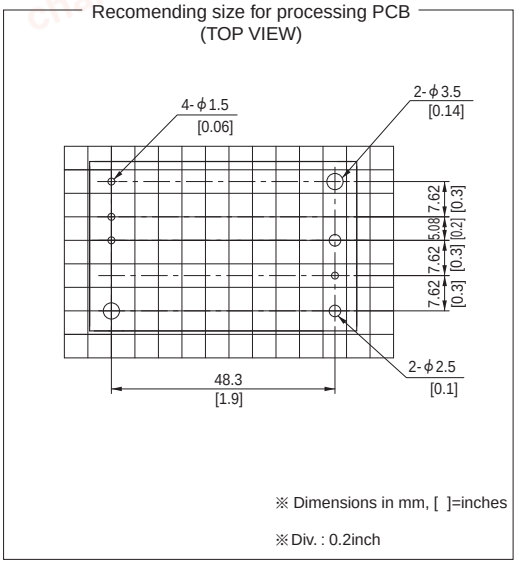

※ Tolerance : ±0.3 [±0.012]
※ Weight : 60g max
※ Dimensions in mm, [ ]=inches
※ Mounting hole screwing torque : 0.49N・m (5.0kgf・cm) max

DHS

COSEL DC-DC Converters Bus Converter·Power Module Type

DHS200A

Ordering information

DH	S	200	A	05	-□
①	②	③	④	⑤	⑥

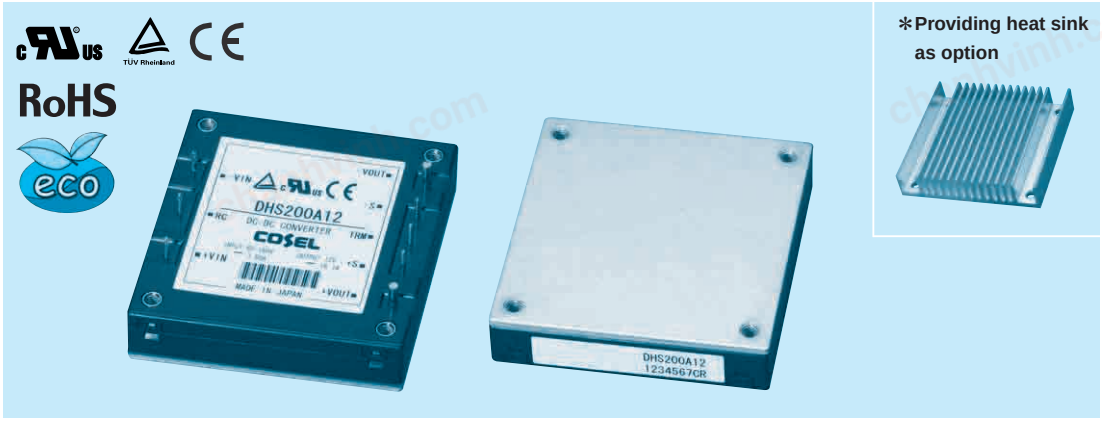

＊Providing heat sink as option

①Series name
②Single output
③Output wattage
④A : DC60-160V
⑤Output voltage
⑥Optional
T : with Mounting hole (φ3.4 thru)

MODEL	DHS200A05	DHS200A12	DHS200A15	DHS200A24
MAX OUTPUT WATTAGE[W]	200.0	200.4	201.0	201.6
DC OUTPUT	5V 40A	12V 16.7A	15V 13.4A	24V 8.4A

SPECIFICATIONS

	MODEL		DHS200A05	DHS200A12	DHS200A15	DHS200A24
INPUT	VOLTAGE[V]		DC60 - 160			
	CURRENT[A]	＊1	2.1A	2.1A	2.1A	2.1A
	EFFICIENCY[%]	＊1	87.0typ	88.0typ	88.0typ	88.0typ
OUTPUT	VOLTAGE[V]		5	12	15	24
	CURRENT[A]		40	16.7	13.4	8.4
	LINE REGULATION[mV]		10max	24max	30max	48max
	LOAD REGULATION[mV]		10max	24max	30max	48max
	RIPPLE[mVp-p]	0 to +100℃ ＊2	80max	120max	120max	120max
		-40 to 0℃ ＊2	120max	150max	150max	150max
		0 to 15% Load ＊2	160max	240max	240max	240max
	RIPPLE NOISE[mVp-p]	0 to +100℃ ＊2	120max	150max	150max	150max
		-40 to 0℃ ＊2	200max	200max	200max	250max
		0 to 15% Load ＊2	240max	300max	300max	300max
	TEMPERATURE REGULATION[mV]	0 to +65℃	50max	120max	150max	240max
		-40 to +100℃	100max	240max	300max	480max
	DRIFT[mV]	＊3	20max	40max	60max	90max
	START-UP TIME[ms]		200max (DCIN 110V, Io=100%)			
	OUTPUT VOLTAGE ADJUSTMENT RANGE[V] ＊4		Fixed (TRM pin open), adjustable by external VR or external voltage			
			3.00 - 6.00	7.20 - 13.20	9.00 - 16.50	14.40 - 26.40
	OUTPUT VOLTAGE SETTING[V]		4.97 - 5.13	11.91 - 12.29	14.76 - 15.24	23.62 - 24.38
PROTECTION CIRCUIT AND OTHERS	OVERCURRENT PROTECTION		Works over 105% of rating and recovers automatically			
	OVERVOLTAGE PROTECTION[V]		6.30 - 7.30	13.90 - 16.35	17.25 - 20.25	27.60 - 32.40
	REMOTE SENSING		Provided			
	REMOTE ON/OFF		Provided (Neqative Logic L : ON, H :OFF)			
ISOLATION	INPUT-OUTPUT		AC3,000V 1minute, Cutoff current = 10mA, DC500V 50MΩ min (20±15℃)			
	INPUT-FG		AC2,000V 1minute, Cutoff current = 10mA, DC500V 50MΩ min (20±15℃)			
	OUTPUT-FG		AC500V 1minute, Cutoff current = 100mA, DC500V 50MΩ min (20±15℃)			
ENVIRONMENT	OPERATING TEMP.,HUMID.AND ALTITUDE		-40 to +100℃ (On aluminum base plate), 20 - 95%RH (Non condensing) (Refer to DERATING CURVE), 3,000m (10,000 feet) max			
	STORAGE TEMP.,HUMID.AND ALTITUDE		-40 to +100℃, 20 - 95%RH (Non condensing), 9,000m (30,000 feet) max			
	VIBRATION		10 - 55Hz, 49.0m/s² (5G), 3minutes period, 60minutes each along X, Y and Z axis Complies with IEC61373 Category 1 Class B			
	IMPACT		196.1m/s² (20G), 11ms, once each along X, Y and Z axis Complies with IEC61373 Category 1 Class B			
SAFETY	AGENCY APPROVALS		UL60950-1, C-UL (CSA60950-1), EN60950-1			
OTHERS	CASE SIZE/WEIGHT		58.4×12.7×61mm [2.3×0.5×2.4 inches] (W×H×D) / 100g max			
	COOLING METHOD		Conduction cooling (e.g. heat radiation from the aluminum base plate to the attached heat sink)			

＊1 At rated input(DC110V) and rated load.
＊2 Ripple and ripple noise is measured by using measuring board. Refer to the manual.
＊3 Drift is the change in DC output for an eight hour period after a half-hour warm-up at 25℃, with the input voltage held constant at the rated input/output.
＊4 Refer to the manual for input range.

chanhvinh.com

External view

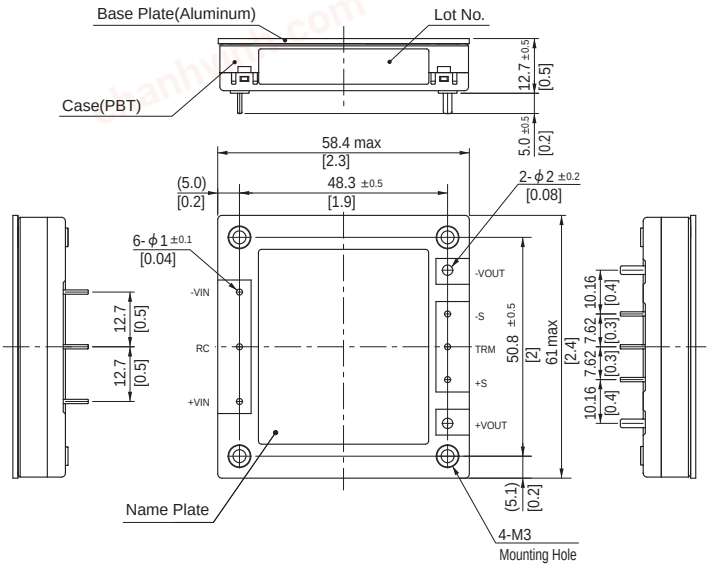

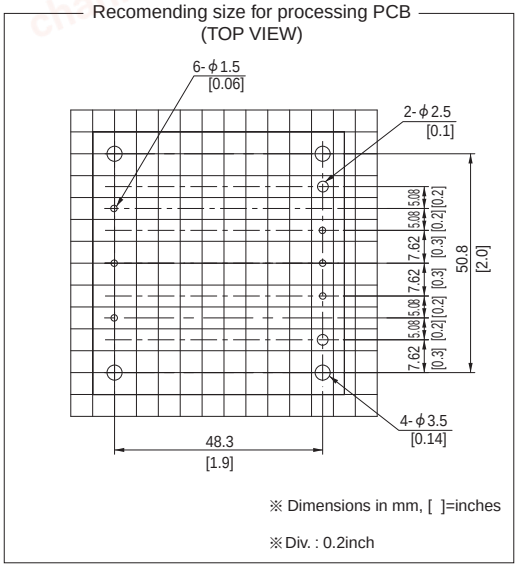

※ Tolerance : ±0.3 [±0.012]
※ Weight : 100g max
※ Dimensions in mm, [ ]=inches
※ Mounting hole screwing torque : 0.49N・m (5.0kgf・cm) max

DHS

chanhvinh.com

COSEL DC-DC Converters Bus Converter·Power Module Type

DHS50B

Ordering information

DH	S	50	B	05	-□
①	②	③	④	⑤	⑥

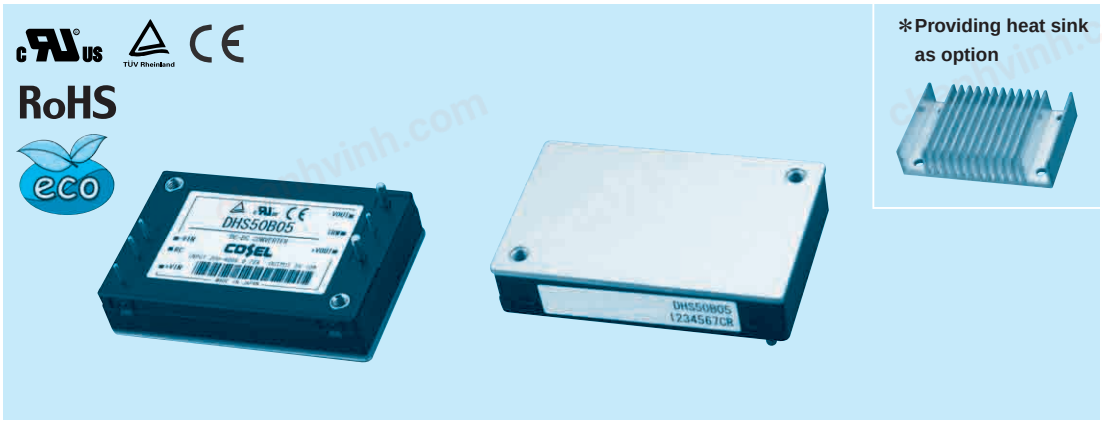

＊Providing heat sink as option

①Series name
②Single output
③Output wattage
④B : DC200-400V
⑤Output voltage
⑥Optional
T : with Mounting hole (φ3.4 thru)

MODEL	DHS50B03	DHS50B05	DHS50B12	DHS50B15	DHS50B24	DHS50B28
MAX OUTPUT WATTAGE[W]	33.0	50.0	50.4	51.0	50.4	50.4
DC OUTPUT	3.3V 10A	5V 10A	12V 4.2A	15V 3.4A	24V 2.1A	28V 1.8A

SPECIFICATIONS

	MODEL		DHS50B03	DHS50B05	DHS50B12	DHS50B15	DHS50B24	DHS50B28
INPUT	VOLTAGE[V]		DC200 - 400					
	CURRENT[A]	＊1	0.15A	0.22A	0.22A	0.22A	0.22A	0.22A
	EFFICIENCY[%]	＊1	77.0typ	80.0typ	83.0typ	83.0typ	83.0typ	82.0typ
OUTPUT	VOLTAGE[V]		3.3	5	12	15	24	28
	CURRENT[A]		10	10	4.2	3.4	2.1	1.8
	LINE REGULATION[mV]		10max	10max	24max	30max	48max	56max
	LOAD REGULATION[mV]		10max	10max	24max	30max	48max	56max
	RIPPLE[mVp-p]	0 to +100℃ ＊2	80max	80max	120max	120max	120max	120max
		-40 to 0℃ ＊2	120max	120max	150max	150max	150max	150max
		0 to 15% Load ＊2	160max	160max	240max	240max	240max	240max
	RIPPLE NOISE[mVp-p]	0 to +100℃ ＊2	120max	120max	150max	150max	150max	150max
		-40 to 0℃ ＊2	200max	200max	200max	200max	250max	250max
		0 to 15% Load ＊2	240max	240max	300max	300max	300max	300max
	TEMPERATURE REGULATION[mV]	0 to +65℃	35max	50max	120max	150max	240max	280max
		-40 to +100℃	66max	100max	240max	300max	480max	560max
	DRIFT[mV]	＊3	16max	20max	40max	60max	90max	90max
	START-UP TIME[ms]		200max (DCIN 280V, Io=100%)					
	OUTPUT VOLTAGE ADJUSTMENT RANGE[V]	＊4	Fixed (TRM pin open), adjustable by external VR or external voltage					
			2.97 - 3.96	4.50 - 6.00	10.80 - 13.20	13.50 - 16.50	21.60 - 26.40	25.20 - 30.80
	OUTPUT VOLTAGE SETTING[V]		3.30 - 3.40	4.97 - 5.13	11.91 - 12.29	14.76 - 15.24	23.62 - 24.38	27.56 - 28.44
PROTECTION CIRCUIT AND OTHERS	OVERCURRENT PROTECTION		Works over 105% of rating and recovers automatically					
	OVERVOLTAGE PROTECTION[V]		4.20 - 5.70	6.30 - 7.60	13.90 - 17.55	17.25 - 21.75	27.60 - 34.80	32.20 - 40.60
	REMOTE SENSING		None					
	REMOTE ON/OFF		Provided (Neqative Logic L : ON, H :OFF)					
ISOLATION	INPUT-OUTPUT		AC3,000V 1minute, Cutoff current = 10mA, DC500V 50MΩ min (20±15℃)					
	INPUT-FG		AC2,000V 1minute, Cutoff current = 10mA, DC500V 50MΩ min (20±15℃)					
	OUTPUT-FG		AC500V 1minute, Cutoff current = 100mA, DC500V 50MΩ min (20±15℃)					
ENVIRONMENT	OPERATING TEMP.,HUMID.AND ALTITUDE		-40 to +100℃ (On aluminum base plate), 20 - 95%RH (Non condensing) (Refer to DERATING CURVE), 3,000m (10,000 feet) max					
	STORAGE TEMP.,HUMID.AND ALTITUDE		-40 to +100℃, 20 - 95%RH (Non condensing), 9,000m (30,000 feet) max					
	VIBRATION		10 - 55Hz, 49.0m/s² (5G), 3minutes period, 60minutes each along X, Y and Z axis					
	IMPACT		196.1m/s² (20G), 11ms, once each along X, Y and Z axis					
SAFETY	AGENCY APPROVALS		UL60950-1, C-UL, EN60950-1					
OTHERS	CASE SIZE/WEIGHT		58.4×12.7×37.3mm [2.3×0.5×1.47 inches] (W×H×D) / 60g max					
	COOLING METHOD		Conduction cooling (e.g. heat radiation from the aluminum base plate to the attached heat sink)					

＊1 At rated input(DC280V) and rated load.
＊2 Ripple and ripple noise is measured by using measuring board. Refer to the manual
＊3 Drift is the change in DC output for an eight hour period after a half-hour warm-up at 25℃, with the input voltage held constant at the rated input/output.
＊4 Refer to the manual for input range.

chanhvinh.com

External view

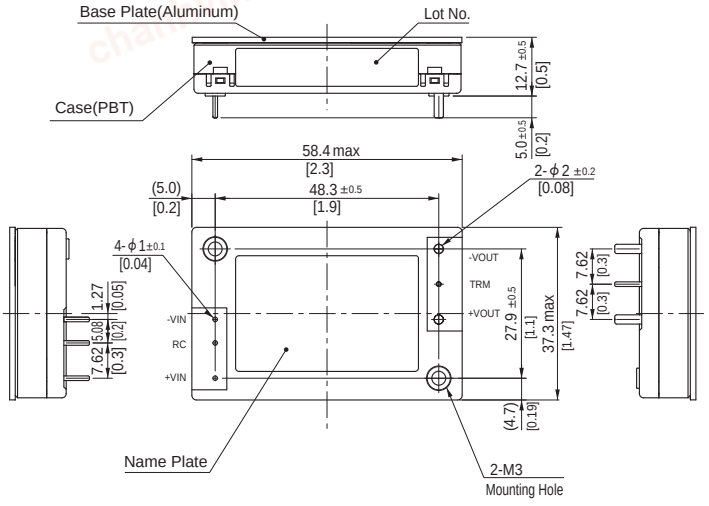

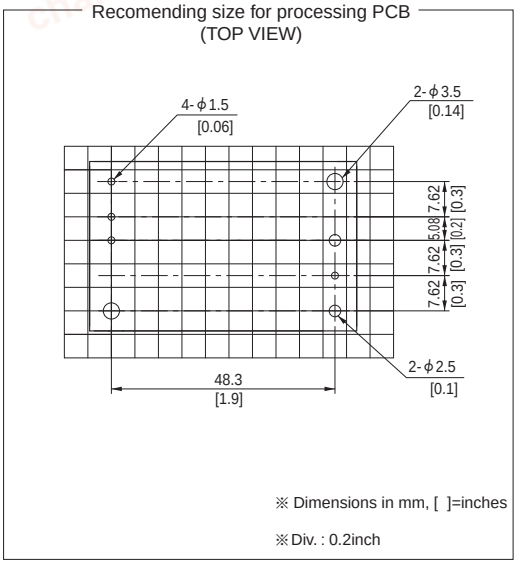

※ Tolerance : ±0.3 [±0.012]
※ Weight : 60g max
※ Dimensions in mm, [ ]=inches
※ Mounting hole screwing torque : 0.49N・m (5.0kgf・cm) max

DHS

chanhvinh.com

COSEL DC-DC Converters Bus Converter・Power Module Type

DHS100B

Ordering information

DH	S	100	B	05	-□
①	②	③	④	⑤	⑥

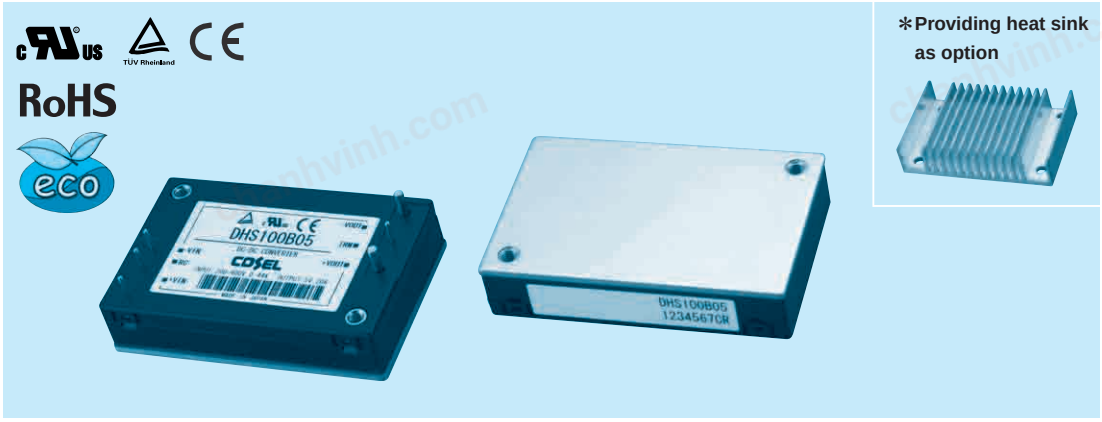

＊Providing heat sink as option

①Series name
②Single output
③Output wattage
④B : DC200-400V
⑤Output voltage
⑥Optional
T : with Mounting hole (φ3.4 thru)

MODEL	DHS100B03	DHS100B05	DHS100B12	DHS100B15	DHS100B24	DHS100B28
MAX OUTPUT WATTAGE[W]	66.0	100.0	100.8	100.5	100.8	100.8
DC OUTPUT	3.3V 20A	5V 20A	12V 8.4A	15V 6.7A	24V 4.2A	28V 3.6A

SPECIFICATIONS

	MODEL		DHS100B03	DHS100B05	DHS100B12	DHS100B15	DHS100B24	DHS100B28
INPUT	VOLTAGE[V]		DC200 - 400					
	CURRENT[A]	＊1	0.30A	0.44A	0.42A	0.42A	0.42A	0.42A
	EFFICIENCY[%]	＊1	79.0typ	82.0typ	85.0typ	86.0typ	86.0typ	86.0typ
OUTPUT	VOLTAGE[V]		3.3	5	12	15	24	28
	CURRENT[A]		20	20	8.4	6.7	4.2	3.6
	LINE REGULATION[mV]		10max	10max	24max	30max	48max	56max
	LOAD REGULATION[mV]		10max	10max	24max	30max	48max	56max
	RIPPLE[mVp-p]	0 to +100℃ ＊2	80max	80max	120max	120max	120max	120max
		-40 to 0℃ ＊2	120max	120max	150max	150max	150max	150max
		0 to 15% Load ＊2	160max	160max	240max	240max	240max	240max
	RIPPLE NOISE[mVp-p]	0 to +100℃ ＊2	120max	120max	150max	150max	150max	150max
		-40 to 0℃ ＊2	200max	200max	200max	200max	250max	250max
		0 to 15% Load ＊2	240max	240max	300max	300max	300max	300max
	TEMPERATURE REGULATION[mV]	0 to +65℃	35max	50max	120max	150max	240max	280max
		-40 to +100℃	66max	100max	240max	300max	480max	560max
	DRIFT[mV]	＊3	16max	20max	40max	60max	90max	90max
	START-UP TIME[ms]		200max (DCIN 280V, Io=100%)					
	OUTPUT VOLTAGE ADJUSTMENT RANGE[V]	＊4	Fixed (TRM pin open), adjustable by external VR or external voltage					
			2.97 - 3.96	4.50 - 6.00	10.80 - 13.20	13.50 - 16.50	21.60 - 26.40	25.20 - 30.80
	OUTPUT VOLTAGE SETTING[V]		3.30 - 3.40	4.97 - 5.13	11.91 - 12.29	14.76 - 15.24	23.62 - 24.38	27.56 - 28.44
PROTECTION CIRCUIT AND OTHERS	OVERCURRENT PROTECTION		Works over 105% of rating and recovers automatically					
	OVERVOLTAGE PROTECTION[V]		4.20 - 5.70	6.30 - 7.60	13.90 - 17.55	17.25 - 21.75	27.60 - 34.80	32.20 - 40.60
	REMOTE SENSING		None					
	REMOTE ON/OFF		Provided (Negative Logic L : ON, H :OFF)					
ISOLATION	INPUT-OUTPUT		AC3,000V 1minute, Cutoff current = 10mA, DC500V 50MΩ min (20±15℃)					
	INPUT-FG		AC2,000V 1minute, Cutoff current = 10mA, DC500V 50MΩ min (20±15℃)					
	OUTPUT-FG		AC500V 1minute, Cutoff current = 100mA, DC500V 50MΩ min (20±15℃)					
ENVIRONMENT	OPERATING TEMP.,HUMID.AND ALTITUDE		-40 to +100℃ (On aluminum base plate), 20 - 95%RH (Non condensing) (Refer to DERATING CURVE), 3,000m (10,000 feet) max					
	STORAGE TEMP.,HUMID.AND ALTITUDE		-40 to +100℃, 20 - 95%RH (Non condensing), 9,000m (30,000 feet) max					
	VIBRATION		10 - 55Hz, 49.0m/s² (5G), 3minutes period, 60minutes each along X, Y and Z axis					
	IMPACT		196.1m/s² (20G), 11ms, once each along X, Y and Z axis					
SAFETY	AGENCY APPROVALS		UL60950-1, C-UL, EN60950-1					
OTHERS	CASE SIZE/WEIGHT		58.4×12.7×37.3mm [2.3×0.5×1.47 inches] (W×H×D) / 60g max					
	COOLING METHOD		Conduction cooling (e.g. heat radiation from the aluminum base plate to the attached heat sink)					

＊1 At rated input(DC280V) and rated load.
＊2 Ripple and ripple noise is measured by using measuring board. Refer to the manual.
＊3 Drift is the change in DC output for an eight hour period after a half-hour warm-up at 25℃, with the input voltage held constant at the rated input/output.
＊4 Refer to the manual for input range.

chanhvinh.com

External view

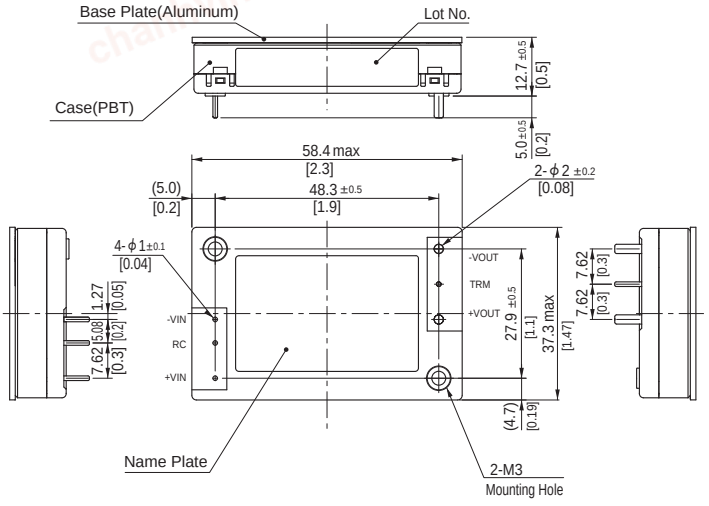

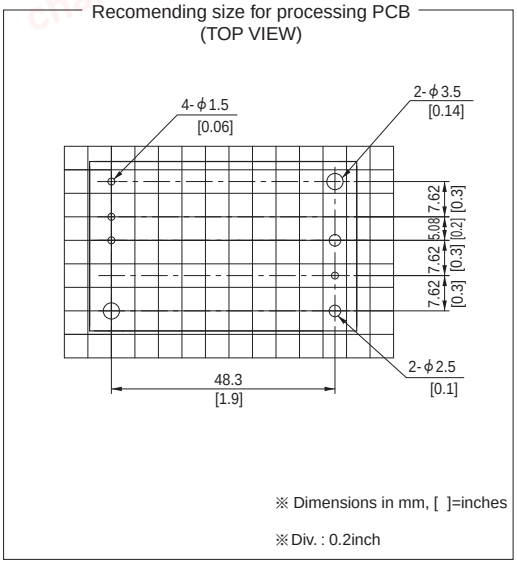

※ Tolerance : ±0.3 [±0.012]
※ Weight : 60g max
※ Dimensions in mm, [ ]=inches
※ Mounting hole screwing torque : 0.49N・m (5.0kgf・cm) max

DHS

chanhvinh.com

COSEL DC-DC Converters Bus Converter·Power Module Type

DHS250B

Ordering information

DH	S	250	B	05	-□
①	②	③	④	⑤	⑥

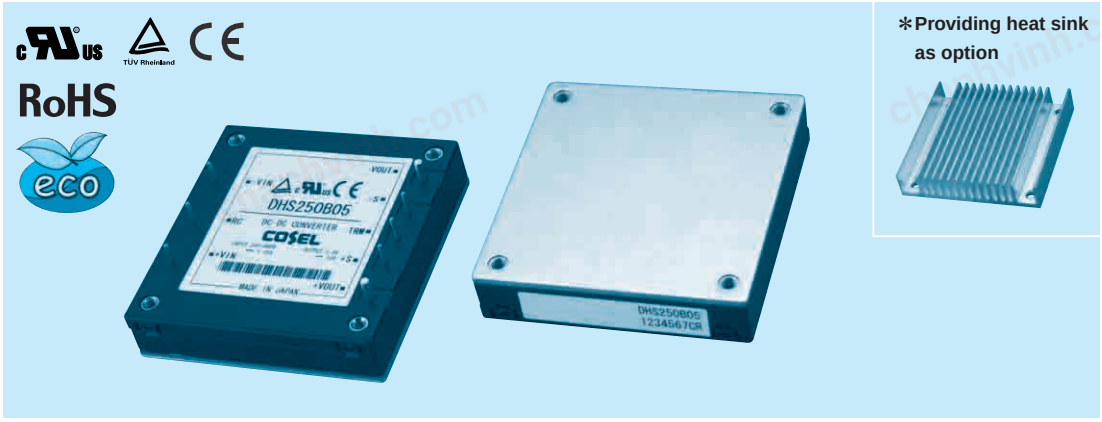

＊Providing heat sink as option

①Series name
②Single output
③Output wattage
④B : DC200-400V
⑤Output voltage
⑥Optional
T : with Mounting hole (φ3.4 thru)

MODEL	DHS250B03	DHS250B05	DHS250B07	DHS250B12	DHS250B15	DHS250B24	DHS250B28	DHS250B48
MAX OUTPUT WATTAGE[W]	165.0	250.0	247.5	252.0	247.5	252.0	252.0	249.6
DC OUTPUT	3.3V 50A	5V 50A	7.5V 33A	12V 21A	15V 16.5A	24V 10.5A	28V 9.0A	48V 5.2A

SPECIFICATIONS

	MODEL		DHS250B03	DHS250B05	DHS250B07	DHS250B12	DHS250B15	DHS250B24	DHS250B28	DHS250B48
INPUT	VOLTAGE[V]		DC200 - 400							
	CURRENT[A]	＊1	0.67A	1.0A	1.0A	1.0A	1.0A	1.0A	1.0A	1.0A
	EFFICIENCY[%]	＊1	88.0typ	90.0typ	88.0typ	88.0typ	88.0typ	88.0typ	88.0typ	89.0typ
OUTPUT	VOLTAGE[V]		3.3	5	7.5	12	15	24	28	48
	CURRENT[A]		50	50	33	21	16.5	10.5	9.0	5.2
	LINE REGULATION[mV]		10max	10max	20max	24max	30max	48max	56max	96max
	LOAD REGULATION[mV]		10max	10max	20max	24max	30max	48max	56max	96max
	RIPPLE[mVp-p]	0 to +100℃ ＊2	80max	80max	100max	120max	120max	120max	120max	200max
		-40 to 0℃ ＊2	120max	120max	130max	150max	150max	150max	150max	250max
		0 to 15% Load ＊2	160max	160max	200max	240max	240max	240max	240max	400max
	RIPPLE NOISE[mVp-p]	0 to +100℃ ＊2	120max	120max	130max	150max	150max	150max	150max	250max
		-40 to 0℃ ＊2	200max	200max	200max	200max	200max	250max	250max	400max
		0 to 15% Load ＊2	240max	240max	260max	300max	300max	300max	300max	500max
	TEMPERATURE REGULATION[mV]	0 to +65℃	35max	50max	70max	120max	150max	240max	280max	480max
		-40 to +100℃	66max	100max	140max	240max	300max	480max	560max	960max
	DRIFT[mV]	＊3	16max	20max	30max	40max	60max	90max	90max	180max
	START-UP TIME[ms]		200max (DCIN 280V, Io=100%)							
	OUTPUT VOLTAGE ADJUSTMENT RANGE[V]	＊4	Fixed (TRM pin open), adjustable by external VR or external voltage							
			1.98 - 3.96	3.00 - 6.00	4.50 - 8.25	7.20 - 13.20	9.00 - 16.50	14.40 - 26.40	16.80 - 30.80	28.80 - 52.80
	OUTPUT VOLTAGE SETTING[V]		3.30 - 3.40	4.97 - 5.13	7.43 - 7.67	11.91 - 12.29	14.76 - 15.24	23.62 - 24.38	27.56 - 28.44	47.24 - 48.76
PROTECTION CIRCUIT AND OTHERS	OVERCURRENT PROTECTION		Works over 105% of rating and recovers automatically							
	OVERVOLTAGE PROTECTION[V]		4.20 - 4.85	6.30 - 7.30	8.70 - 10.20	13.90 - 16.35	17.25 - 20.25	27.60 - 32.40	32.20 - 37.80	55.20 - 64.80
	REMOTE SENSING		Provided							
	REMOTE ON/OFF		Provided (Neqative Logic L : ON, H :OFF)							
ISOLATION	INPUT-OUTPUT		AC3,000V 1minute, Cutoff current = 10mA, DC500V 50MΩ min (20±15℃)							
	INPUT-FG		AC2,000V 1minute, Cutoff current = 10mA, DC500V 50MΩ min (20±15℃)							
	OUTPUT-FG		AC500V 1minute, Cutoff current = 100mA, DC500V 50MΩ min (20±15℃)							
ENVIRONMENT	OPERATING TEMP.,HUMID.AND ALTITUDE		-40 to +100℃ (On aluminum base plate), 20 - 95%RH (Non condensing) (Refer to DERATING CURVE), 3,000m (10,000 feet) max							
	STORAGE TEMP.,HUMID.AND ALTITUDE		-40 to +100℃, 20 - 95%RH (Non condensing), 9,000m (30,000 feet) max							
	VIBRATION		10 - 55Hz, 49.0m/s² (5G), 3minutes period, 60minutes each along X, Y and Z axis							
	IMPACT		196.1m/s² (20G), 11ms, once each along X, Y and Z axis							
SAFETY	AGENCY APPROVALS		UL60950-1, C-UL, EN60950-1							
OTHERS	CASE SIZE/WEIGHT		58.4×12.7×61mm [2.3×0.5×2.4 inches](W×H×D) / 100g max							
	COOLING METHOD		Conduction cooling (e.g. heat radiation from the aluminum base plate to the attached heat sink)							

＊1 At rated input(DC280V) and rated load.
＊2 Ripple and ripple noise is measured by using measuring board. Refer to the manual.
＊3 Drift is the change in DC output for an eight hour period after a half-hour warm-up at 25℃, with the input voltage held constant at the rated input/output.
＊4 Refer to the manual for input range.

chanhvinh.com

External view

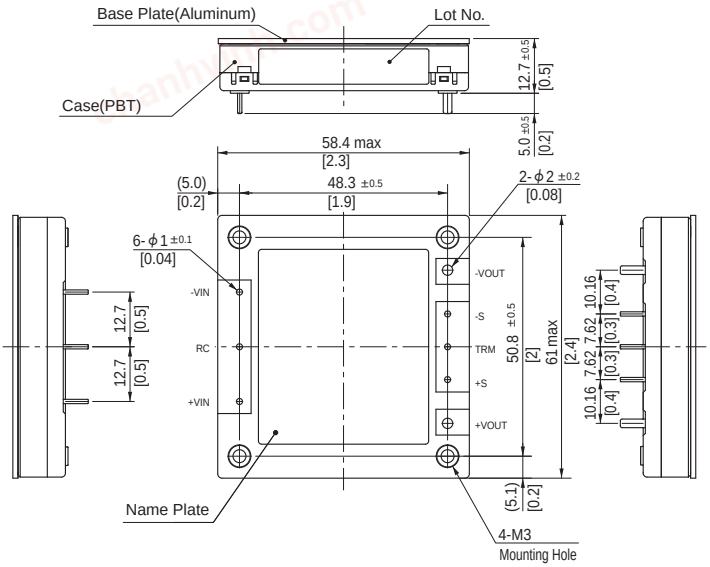

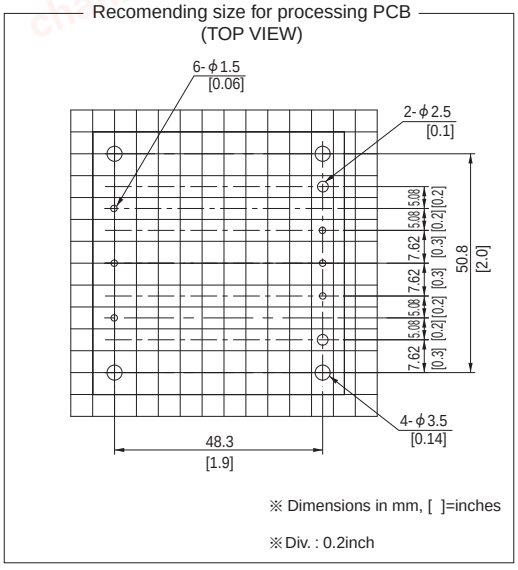

※ Tolerance : ±0.3 [±0.012]
※ Weight : 100g max
※ Dimensions in mm, [ ]=inches
※ Mounting hole screwing torque : 0.49N・m (5.0kgf・cm) max

DHS