chanhvinh.com

CML INNOVATIVE TECHNOLOGIES
WHERE INNOVATION COMES TO LIGHT
A Grupo Antolin Company

PRODUCT DATA SHEET

Part Number: 1905X00X

Type	Size	Rating	Description
LED	M8	-	LED Recessed Panel Indicator

Dimensions in mm (Not to scale)

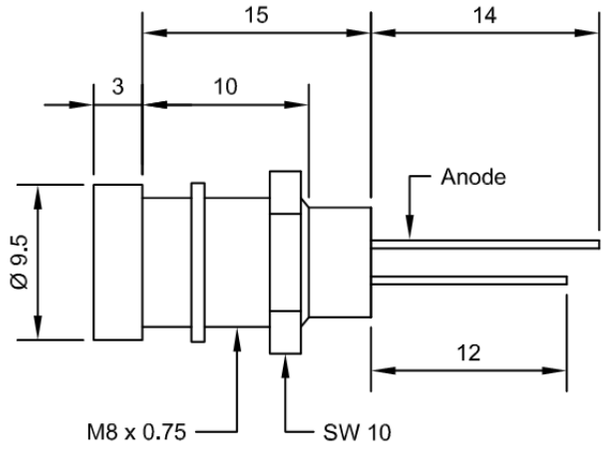

Part #	Colour	Typ. V_f	Typ. Luminous Intensity (mcd @ 10mA)
1905X003	Red	2.0	25
1905X001	Green	2.2	20
1905X002	Yellow	2.1	20
1905X007	Blue	3.8	45
1905X008	Orange	2.0	30
1905X00W	White	3.2	1000

Bezel types - X=0 satin chrome / X=1 black chrome / X=2 matt chrome

Notes:

1 Electrical & optical data are measured at an ambient temperature of 25ºC
2 Stated luminous intensity is for DC operation
3 Storage temperature -25 ºC to +80ºC
4 Application temperature -20 ºC to +60ºC
5 Due to component tolerances, colour temperature variations may be observed
6 Ingress protection rating: IP40
7 The plastic (polycarbonate) has limited chemical resistance
8 RoHS & REACH SVHC compliant

CML Innovative Technologies Ltd • 69-70 Eastern Way • Bury St Edmunds • Suffolk • IP32 7AB • England
Tel: +44 (0) 1284 714700 • Fax: +44 (0) 1284 754406 • Email: bury@cml-it.com • www.cml-it.com
Registered Office: Eastern Way, Bury St Edmunds – Registration No. 265006 England