chanhvinh.com

# PRODUCT DATA SHEET

Part Number: 1904X05X

| Type | Size | Description |
|---|---|---|
| LED | M8 | LED Prominent Panel Indicator with terminals |

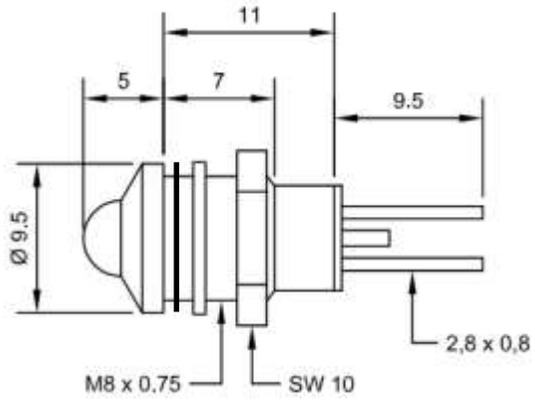


| Part # | Colour | $V_f$ | Intensity (mcd) @ 10mA |
|---|---|---|---|
| 1904X050 | Red | 2.25 | 5 |
| 1904X051 | Green | 2.0 | 20 |
| 1904X052 | Yellow | 2.1 | 20 |
| 1904X053 | HE-Red | 2.0 | 25 |

Notes:

1 X=bezel chrome finish, 0=Satin, 1=Black, 2=Matt
2 Electrical & optical data are measured at an ambient temperature of 25ºC
2 Storage temperature -25 ºC to +80ºC
3 Application temperature -20 ºC to +60ºC
4 Terminal polarity: brass positive
5 IP67 sealed with the fitted gasket
6 Due to component tolerances, colour temperature variations may be observed
7 The plastic (polycarbonate) has limited chemical resistance
8 RoHS & REACH SVHC compliant


CML Innovative Technologies Ltd • 69-70 Eastern Way • Bury St Edmunds • Suffolk • IP32 7AB • England
Tel: +44 (0) 1284 714700 • Fax: +44 (0) 1284 724850 • www.cml-it.com
Registered Office: Eastern Way, Bury St Edmunds – Registration No. 265006 England