chanhvinh.com

CLIFF

DC LEADS

DC PLUG TO SOCKET



VARIANTS

FC582105 - 2.1mm DC Plug to Socket 0.5m
FC582110 - 2.1mm DC Plug to Socket 1m
FC582120 - 2.1mm DC Plug to Socket 2m

FC582505 - 2.5mm DC Plug to Socket 0.5m
FC582510 - 2.5mm DC Plug to Socket 1m
FC582520 - 2.5mm DC Plug to Socket 2m

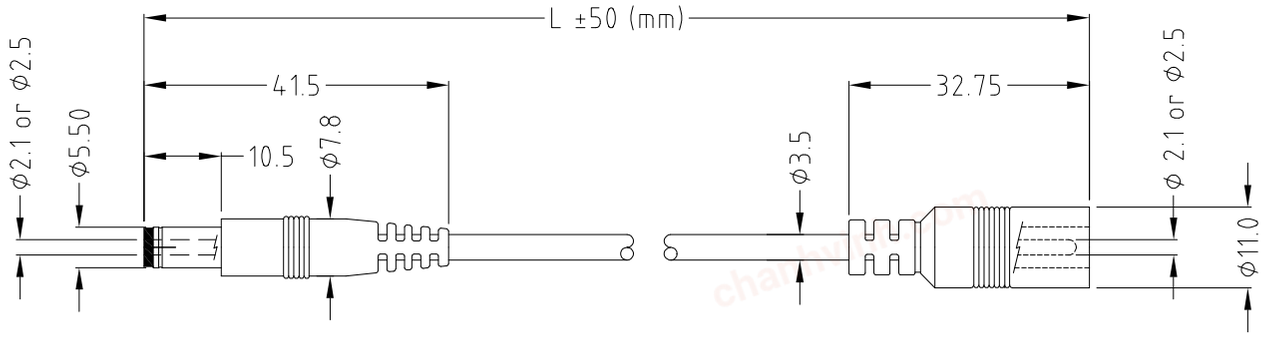

DC PLUG TO FREE END



VARIANTS

FC592105 - 2.1mm DC Plug to Free End 0.5m
FC592110 - 2.1mm DC Plug to Free End 1m
FC592120 - 2.1mm DC Plug to Free End 2m

FC592505 - 2.5mm DC Plug to Free End 0.5m
FC592510 - 2.5mm DC Plug to Free End 1m
FC592520 - 2.5mm DC Plug to Free End 2m

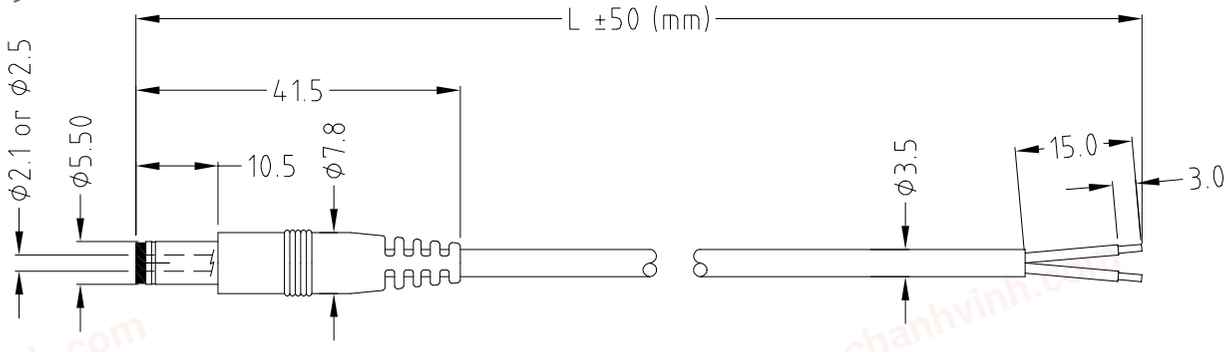

MATERIAL
Plug Overmould: 40P PVC Black
Cable: Black PVC 17x0.16 (2x)
Plug Contact: Brass Ni Plated
Socket Contact: Brass Ni Plated

SPECIFICATION
Max Voltage: 12V
Max Current: 2A
Dielectric Withstand: 300V DC
Conductor Resistance: 2Ω
Insulation Resistance: 50MΩ

© CLIFF 08/2025 ISS.1

For further information, contact sales@cliffuk.co.uk

Cliff Electronic Components Limited,
76 Holmethorpe Avenue, Holmethorpe Ind. Estate,
Redhill, Surrey RH1 2PF U.K.
Tel: +44 (0)1737 771375 Fax: +44 (0)1737 766012

www.cliffuk.co.uk

RoHS