chanhvinh.com

5.08mm inverted/reverse terminal blocks

Product overview

- 2-12 pole solid block
- Professional rising clamp terminals
- Moulded in green UL94-V0 flame retardant PA 66
- Cable acceptance - 0.32 to 1.6mm² (28-14AWG)
- Horizontal and vertical orientations
- Pluggable male and female connectors
- Polarized moulding
- Dual row pins for extra stability
- Also available in 5mm pitch
- cULus approved

SPECIFICATION	
Rating	UL=15A/300V
Insulation resistance	500M Ω/500V
Withstand voltage	AC2000V/1min
Contact resistance	20mΩ (max)
Working temperature	-40°C to +105°C
Moulding	UL94-V0 flame retardant PA66
Pin/terminal	Tin plated brass
Rising clamp	Brass, nickel plated
Screw/torque	M3 steel, zinc plated 0.5Nm
Recommended PCB hole size	ø1.4mm

Male connector

PART NO.	POLES	LENGTH
CTBP96HJ/2	2	11.8mm
CTBP96HJ/3	3	16.8mm
CTBP96HJ/4	4	21.9mm
CTBP96HJ/5	5	27.0mm
CTBP96HJ/6	6	32.1mm
CTBP96HJ/7	7	37.2mm
CTBP96HJ/8	8	42.2mm
CTBP96HJ/9	9	47.3mm
CTBP96HJ/10	10	52.4mm
CTBP96HJ/11	11	57.5mm
CTBP96HJ/12	12	62.6mm

CTBP96HJ



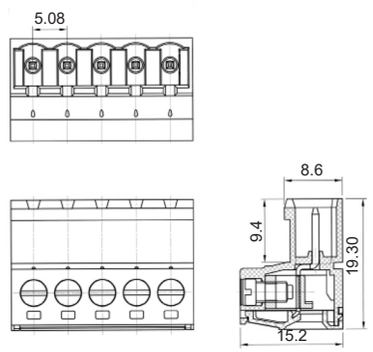

Male connector (flanged)

PART NO.	POLES	LENGTH A	LENGTH B
CTBP96HJ/2FL	2	11.8mm	20.3mm
CTBP96HJ/3FL	3	16.8mm	25.4mm
CTBP96HJ/4FL	4	21.9mm	30.5mm
CTBP96HJ/5FL	5	27mm	35.6mm
CTBP96HJ/6FL	6	32.1mm	40.7mm
CTBP96HJ/7FL	7	37.2mm	45.7mm
CTBP96HJ/8FL	8	42.2mm	50.8mm
CTBP96HJ/9FL	9	47.3mm	55.9mm
CTBP96HJ/10FL	10	52.4mm	61.0mm
CTBP96HJ/11FL	11	57.5mm	66.1mm
CTBP96HJ/12FL	12	62.6mm	71.1mm

CTBP96HJ FL



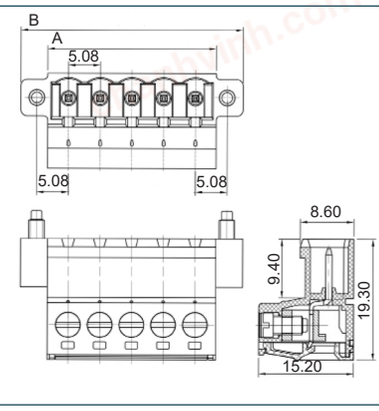

PCB mounted female vertical connector

PART NO.	POLES	LENGTH
CTBP97VJ/2	2	12.2mm
CTBP97VJ/3	3	17.2mm
CTBP97VJ/4	4	22.3mm
CTBP97VJ/5	5	27.4mm
CTBP97VJ/6	6	32.5mm
CTBP97VJ/7	7	37.6mm
CTBP97VJ/8	8	42.6mm
CTBP97VJ/9	9	47.7mm
CTBP97VJ/10	10	52.8mm
CTBP97VJ/11	11	57.9mm
CTBP97VJ/12	12	63.0mm

CTBP97VJ



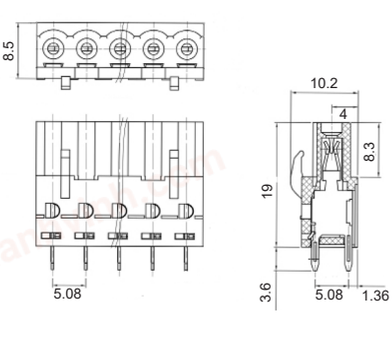

+44 (0)1638 716101 | sales@camdenboss.com | www.camdenboss.com

We operate a constant improvement policy, our products are subject to change without notice.

Vers 1

bsi ISO 9001 Quality Management Systems CERTIFIED FM 28514

chanhvinh.com

PCB mounting female vertical connector (flanged)

PART NO.	POLES	LENGTH A	LENGTH B
CTBP97VJ/2FL	2	10.2mm	20.32mm
CTBP97VJ/3FL	3	15.2mm	25.4mm
CTBP97VJ/4FL	4	20.3mm	30.48mm
CTBP97VJ/5FL	5	25.4mm	35.56mm
CTBP97VJ/6FL	6	30.5mm	40.64mm
CTBP97VJ/7FL	7	35.6mm	45.72mm
CTBP97VJ/8FL	8	40.6mm	50.8mm
CTBP97VJ/9FL	9	45.7mm	55.88mm
CTBP97VJ/10FL	10	50.8mm	60.96mm
CTBP97VJ/11FL	11	55.9mm	66.04mm
CTBP97VJ/12FL	12	61.0mm	71.12mm

CTBP97VJ FL



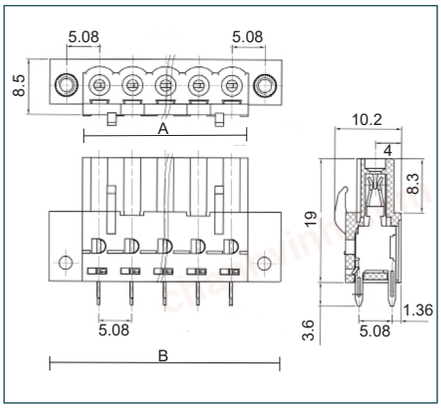

PCB mounting female horizontal connector

PART NO.	POLES	LENGTH
CTBP97HJ /2	2	12.2mm
CTBP97HJ /3	3	17.2mm
CTBP97HJ /4	4	22.3mm
CTBP97HJ /5	5	27.4mm
CTBP97HJ /6	6	32.5mm
CTBP97HJ /7	7	37.6mm
CTBP97HJ /8	8	42.6mm
CTBP97HJ /9	9	47.7mm
CTBP97HJ /10	10	52.8mm
CTBP97HJ /11	11	57.9mm
CTBP97HJ /12	12	63.0mm

CTBP97HJ

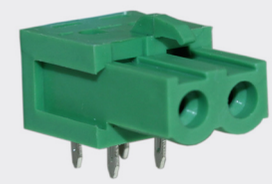

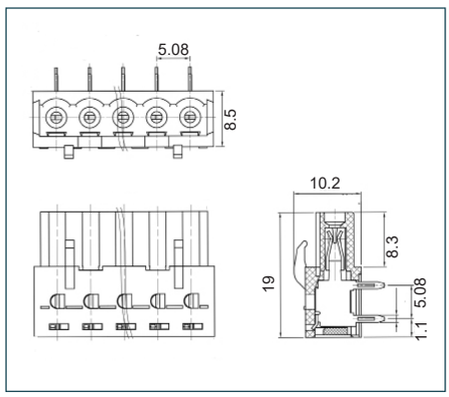

PCB mounting female horizontal connector (flanged)

PART NO.	POLES	LENGTH A	LENGTH B
CTBP97HJ/2FL	2	10.2mm	20.32mm
CTBP97HJ/3FL	3	15.2mm	25.4mm
CTBP97HJ/4FL	4	20.3mm	30.48mm
CTBP97HJ/5FL	5	25.4mm	35.56mm
CTBP97HJ/6FL	6	30.5mm	40.64mm
CTBP97HJ/7FL	7	35.6mm	45.72mm
CTBP97HJ/8FL	8	40.6mm	50.8mm
CTBP97HJ/9FL	9	45.7mm	55.88mm
CTBP97HJ/10FL	10	50.8mm	60.96mm
CTBP97HJ/11FL	11	55.9mm	66.04mm
CTBP97HJ/12FL	12	61.0mm	71.12mm

CTBP97HJ FL



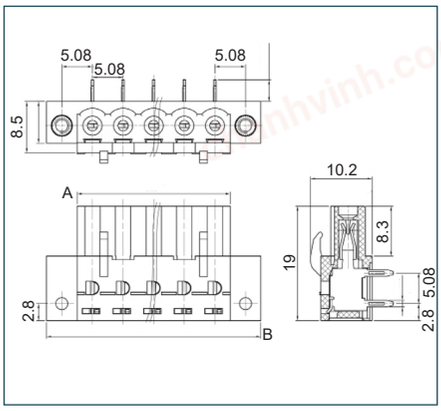

+44 (0)1638 716101 | sales@camdenboss.com | www.camdenboss.com

We operate a constant improvement policy, our products are subject to change without notice.
Vers 1

bsi ISO 9001 Quality Management Systems CERTIFIED
FM 28614