chanhvinh.com

3.81mm pitch pluggable rising clamp terminal blocks

Product overview

- 2-12 pole solid block
- Professional rising clamp terminals
- Moulded in green UL94-V0 flame retardant PA66
- Cable acceptance - 0.32 to 1.3mm² (28-16AWG) solid and stranded cable
- Pluggable male and female connectors
- Closed headers
- Horizontal and vertical female plug styles
- Polarised mouldings
- Anti solder wicking
- Captive screws and guided pin alignment
- cULus, DVE approved

SPECIFICATION	
Rating	UL=8A/300V, VDE=10A/250V
Insulation resistance	500M Ω/500V
Withstand voltage	AC2000V/1min
Contact resistance	20mΩ (max)
Working temperature	-40°C to +105°C
Moulding	UL94-V0 flame retardant PA66
Pin/terminal	Tin plated brass
Rising clamp	Brass, nickel plated
Screw/torque	M2 steel, zinc plated 0.2Nm
Recommended PCB hole size	ø1.4mm

Female connector

PART NO.	POLES	LENGTH
CTBP92HE/2	2	8.4mm
CTBP92HE/3	3	12.2mm
CTBP92HE/4	4	16mm
CTBP92HE/5	5	19.8mm
CTBP92HE/6	6	23.7mm
CTBP92HE/7	7	27.5mm
CTBP92HE/8	8	31.3mm
CTBP92HE/9	9	35.1mm
CTBP92HE/10	10	38.9mm
CTBP92HE/11	11	42.7mm
CTBP92HE/12	12	46.5mm

CTBP92HE



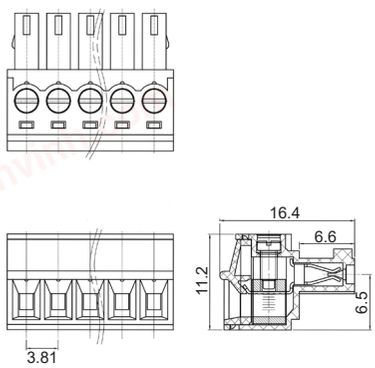

Female vertical connector (standard)

PART NO.	POLES	LENGTH
CTBP92VE/2S	2	8.4mm
CTBP92VE/3S	3	12.2mm
CTBP92VE/4S	4	16mm
CTBP92VE/5S	5	19.8mm
CTBP92VE/6S	6	23.7mm
CTBP92VE/7S	7	27.5mm
CTBP92VE/8S	8	31.3mm
CTBP92VE/9S	9	35.1mm
CTBP92VE/10S	10	38.9mm
CTBP92VE/11S	11	42.7mm
CTBP92VE/12S	12	46.5mm

CTBP92VE S



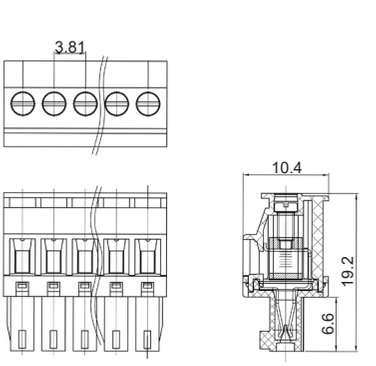

Female vertical connector (reversed)

PART NO.	POLES	LENGTH
CTBP92VE/2R	2	8.4mm
CTBP92VE/3R	3	12.2mm
CTBP92VE/4R	4	16mm
CTBP92VE/5R	5	19.8mm
CTBP92VE/6R	6	23.7mm
CTBP92VE/7R	7	27.5mm
CTBP92VE/8R	8	31.3mm
CTBP92VE/9R	9	35.1mm
CTBP92VE/10R	10	38.9mm
CTBP92VE/11R	11	42.7mm
CTBP92VE/12R	12	46.5mm

CTBP92VE R

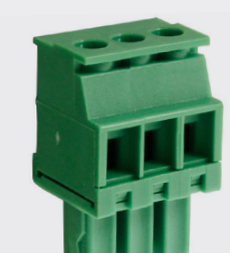

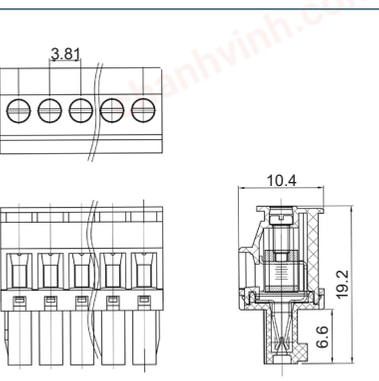

bsi ISO 9001 Quality Management Systems CERTIFIED FM 28614

+44 (0)1638 716101 | sales@camdenboss.com | www.camdenboss.com

We operate a constant improvement policy, our products are subject to change without notice.

chanhvinh.com

PCB mounting male horizontal connector (closed ended)

PART NO.	POLES	LENGTH
CTBP93HE/2	2	8.4mm
CTBP93HE/3	3	12.2mm
CTBP93HE/4	4	16.0mm
CTBP93HE/5	5	19.8mm
CTBP93HE/6	6	23.7mm
CTBP93HE/7	7	27.5mm
CTBP93HE/8	8	31.3mm
CTBP93HE/9	9	35.1mm
CTBP93HE/10	10	38.9mm
CTBP93HE/11	11	42.7mm
CTBP93HE/12	12	46.5mm

CTBP93HE



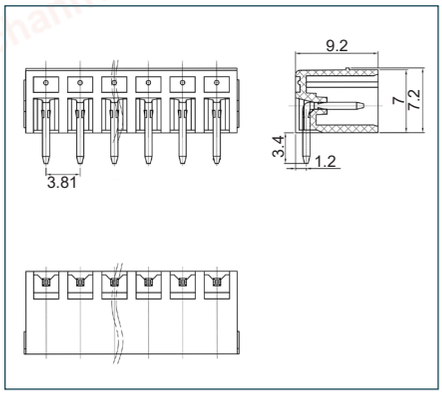

PCB mounting male vertical connector (closed ended)

PART NO.	POLES	LENGTH
CTBP93VE/2	2	8.4mm
CTBP93VE/3	3	12.2mm
CTBP93VE/4	4	16.0mm
CTBP93VE/5	5	19.8mm
CTBP93VE/6	6	23.7mm
CTBP93VE/7	7	27.5mm
CTBP93VE/8	8	31.3mm
CTBP93VE/9	9	35.1mm
CTBP93VE/10	10	38.9mm
CTBP93VE/11	11	42.7mm
CTBP93VE/12	12	46.5mm

CTBP93VE

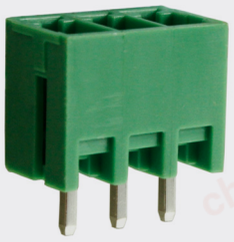

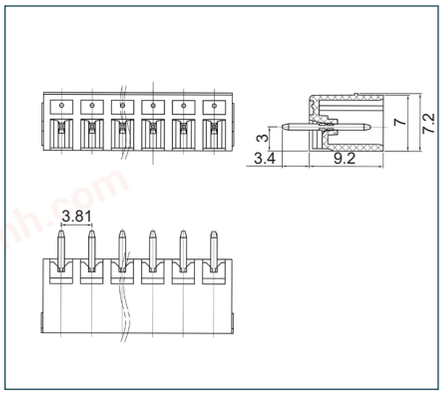

ASSOCIATED PRODUCTS

CTB92HE, CTB92VE S and CTBP92VE R can be replaced with a screwless type terminal block for a reduced assembly time.

CSTBP92HE - page 78

+44 (0)1638 716101 | sales@camdenboss.com | www.camdenboss.com

We operate a constant improvement policy, our products are subject to change without notice.

Vers 1

bsi ISO 9001 Quality Management Systems CERTIFIED FM 28514