chanhvinh.com

5mm pitch pluggable rising clamp terminal blocks

Product overview

- 2-12 pole solid block
- Professional rising clamp terminals
- Moulded in green UL94-V0 flame retardant PA66
- Cable acceptance - 0.32 to 1.6mm² (28-14AWG) solid and stranded cable
- Pluggable male and female connectors
- Open and closed headers
- Horizontal and vertical female plug styles
- Polarised mouldings
- Anti solder wicking
- Captive screws and guided pin alignment
- cULus, VDE approved

SPECIFICATION	
Rating	UL=15A/300V, VDE=20A/450V
Insulation resistance	500M Ω/500V
Withstand voltage	AC2000V/1min
Contact resistance	20mΩ (max)
Working temperature	-40°C to +105°C
Moulding	UL94-V0 flame retardant PA66
Pin/terminal	Tin plated brass
Rising clamp	Brass, nickel plated
Screw/torque	M3 steel, zinc plated 0.5Nm
Recommended PCB hole size	ø1.7mm

Female connector

PART NO.	POLES	LENGTH
CTBP9200/2	2	10mm
CTBP9200/3	3	15mm
CTBP9200/4	4	20mm
CTBP9200/5	5	25mm
CTBP9200/6	6	30mm
CTBP9200/7	7	35mm
CTBP9200/8	8	40mm
CTBP9200/9	9	45mm
CTBP9200/10	10	50mm
CTBP9200/11	11	55mm
CTBP9200/12	12	60mm

CTBP9200



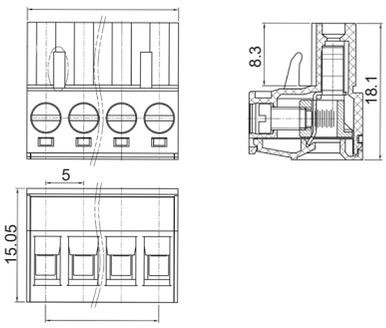

Female vertical connector (standard)

PART NO.	POLES	LENGTH
CTBP92VG/2S	2	10mm
CTBP92VG/3S	3	15mm
CTBP92VG/4S	4	20mm
CTBP92VG/5S	5	25mm
CTBP92VG/6S	6	30mm
CTBP92VG/7S	7	35mm
CTBP92VG/8S	8	40mm
CTBP92VG/9S	9	45mm
CTBP92VG/10S	10	50mm
CTBP92VG/11S	11	55mm
CTBP92VG/12S	12	60mm

CTBP92VG S



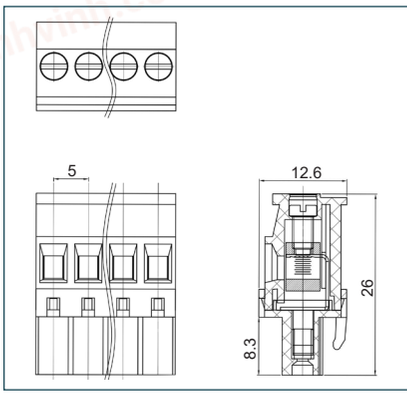

Female connector (reversed)

PART NO.	POLES	LENGTH
CTBP92VG/2R	2	10mm
CTBP92VG/3R	3	15mm
CTBP92VG/4R	4	20mm
CTBP92VG/5R	5	25mm
CTBP92VG/6R	6	30mm
CTBP92VG/7R	7	35mm
CTBP92VG/8R	8	40mm
CTBP92VG/9R	9	45mm
CTBP92VG/10R	10	50mm
CTBP92VG/11R	11	55mm
CTBP92VG/12R	12	60mm

CTBP92VG R



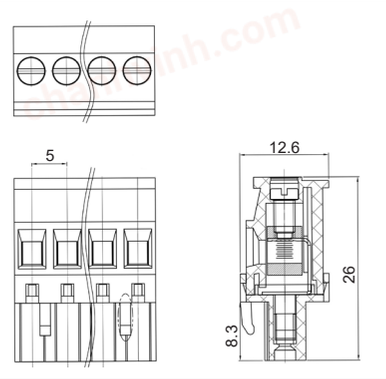

+44 (0)1638 716101 | sales@camdenboss.com | www.camdenboss.com

We operate a constant improvement policy, our products are subject to change without notice.

Vers 1

bsi ISO 9001 Quality Management Systems CERTIFIED FM 28514

chanhvinh.com

PCB mounting male vertical connector (closed ended)

PART NO.	POLES	LENGTH
CTBP9300/2	2	11.4mm
CTBP9300/3	3	16.4mm
CTBP9300/4	4	21.4mm
CTBP9300/5	5	26.4mm
CTBP9300/6	6	31.4mm
CTBP9300/7	7	36.4mm
CTBP9300/8	8	41.4mm
CTBP9300/9	9	46.4mm
CTBP9300/10	10	51.4mm
CTBP9300/11	11	56.4mm
CTBP9300/12	12	61.4mm

CTBP9300



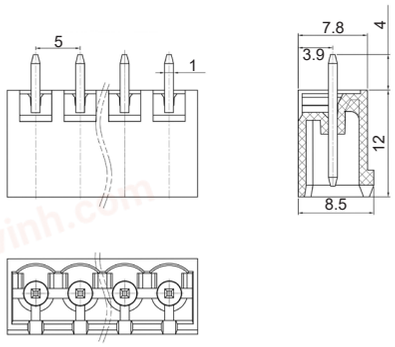

PCB mounting male horizontal connector (closed ended)

PART NO.	POLES	LENGTH
CTBP9350/2	2	11.4mm
CTBP9350/3	3	16.4mm
CTBP9350/4	4	21.4mm
CTBP9350/5	5	26.4mm
CTBP9350/6	6	31.4mm
CTBP9350/7	7	36.4mm
CTBP9350/8	8	41.4mm
CTBP9350/9	9	46.4mm
CTBP9350/10	10	51.4mm
CTBP9350/11	11	56.4mm
CTBP9350/12	12	61.4mm

CTBP9350



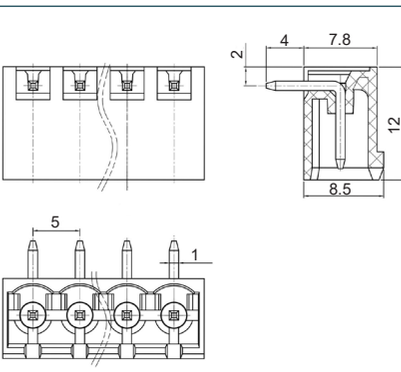

PCB mounting male vertical connector (open ended)

PART NO.	POLES	LENGTH
CTBP9300/2AO	2	10mm
CTBP9300/3AO	3	15mm
CTBP9300/4AO	4	20mm
CTBP9300/5AO	5	25mm
CTBP9300/6AO	6	30mm
CTBP9300/7AO	7	35mm
CTBP9300/8AO	8	40mm
CTBP9300/9AO	9	45mm
CTBP9300/10AO	10	50mm
CTBP9300/11AO	11	55mm
CTBP9300/12AO	12	60mm

CTBP9300 AO

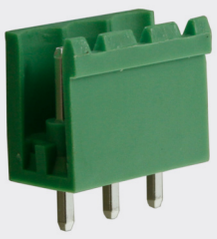

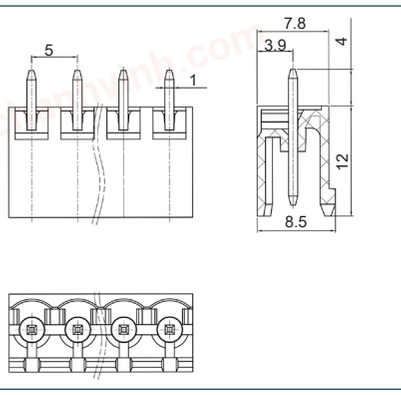

PCB mounting male horizontal connector (open ended)

PART NO.	POLES	LENGTH
CTBP9350/2AO	2	10mm
CTBP9350/3AO	3	15mm
CTBP9350/4AO	4	20mm
CTBP9350/5AO	5	25mm
CTBP9350/6AO	6	30mm
CTBP9350/7AO	7	35mm
CTBP9350/8AO	8	40mm
CTBP9350/9AO	9	45mm
CTBP9350/10AO	10	50mm
CTBP9350/11AO	11	55mm
CTBP9350/12AO	12	60mm

CTBP9350 AO

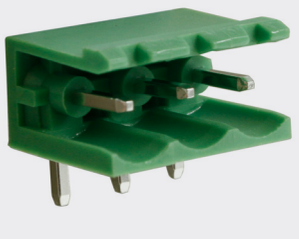

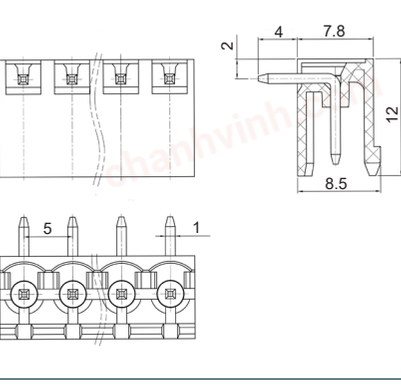

+44 (0)1638 716101 | sales@camdenboss.com | www.camdenboss.com

We operate a constant improvement policy, our products are subject to change without notice.
Vers 1

bsi ISO 9001 Quality Management Systems CERTIFIED FM 28614