chanhvinh.com

3.5mm pitch low profile commercial screw terminal blocks

Product overview

- 2-12 pole double interlock mechanism for increased strength
- Wire protector terminals
- Ultra low profile
- UL94-V0 flame retardant PA66
- Cable acceptance - 0.5-1.0mm² (24-18AWG)
- cULus , VDE approved

CTBP3051



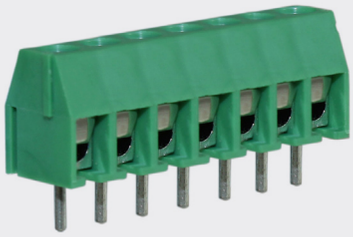

SPECIFICATION	
Rating	UL= 10A/300V, VDE =10A/250V
Insulation resistance	500M Ω/500V
Withstand voltage	AC2000V/1min
Contact resistance	20mΩ (max)
Working temperature	-40°C to +105°C
Moulding	UL94-V0 flame retardant PA66
Pin/terminal	Tin plated brass
Wire protector	Phosphor bronze, nickel plated
Screw/torque	M2 steel, zinc plated 0.2Nm
Recommended PCB hole size	ø1.1mm

PART NO.	POLES	LENGTH
CTBP3051/2	2	7mm
CTBP3051/3	3	10.5mm
CTBP3051/4	4	14mm
CTBP3051/5	5	17.5mm
CTBP3051/6	6	21mm
CTBP3051/7	7	24.5mm
CTBP3051/8	8	28mm
CTBP3051/9	9	31.5mm
CTBP3051/10	10	35mm
CTBP3051/11	11	38.5mm
CTBP3051/12	12	42mm

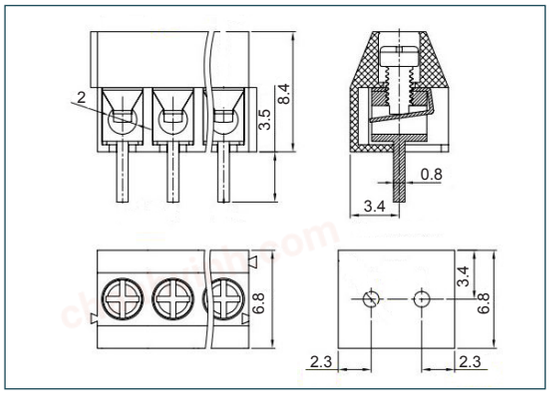

KEY FEATURES

Wire protector terminals | Double interlock mechanism | Flame retardant PA66

CUSTOMISE ME PRINTING