chanhvinh.com



# 5mm pitch 36 pole rising clamp terminal blocks

## Product overview

- Unique 36 pole strips
- Professional rising clamp terminals
- Standard profile
- Moulded in grey UL94-V0 flame retardant PC
- Cable acceptance - 0.2-2mm² (30-12AWG) solid cable
- Cable acceptance - 0.2-2mm² (30-12AWG) stranded cable
- Easily cut to required number of poles or can be supplied pre-cut
- Guided pin alignment
- Anti solder wicking
- c UL us , , approved

*CTB7000*



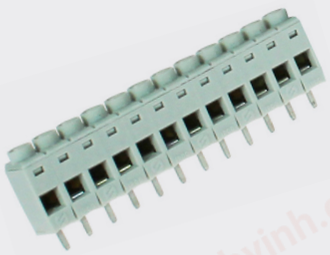

| SPECIFICATION | |
|---|---|
| Rating | 22A/250V UL=16A/300V, VDE and IMQ=22A/450V |
| Dielectric strength | ≥2.5kV |
| Impulse withstand voltage | 4kV |
| Working temperature | 85°C |
| Moulding | UL94-V0 flame retardant PC |
| Pin/terminal | Tinned, nickel plated brass |
| Rising clamp | Nickel plated brass |
| Screw/torque | M2.5 steel zinc plated, 0.5Nm |
| Recommended PCB hole size | ø1.3mm |

| PART NO. | POLES | LENGTH |
|---|---|---|
| CTB7000/1 | 1 | 5mm |
| CTB7000/2 | 2 | 10mm |
| CTB7000/3 | 3 | 15mm |
| CTB7000/4 | 4 | 20mm |
| CTB7000/5 | 5 | 25mm |
| CTB7000/6 | 6 | 30mm |
| CTB7000/7 | 7 | 35mm |
| CTB7000/8 | 8 | 40mm |
| CTB7000/9 | 9 | 45mm |
| CTB7000/10 | 10 | 50mm |
| CTB7000/11 | 11 | 55mm |
| CTB7000/12 | 12 | 60mm |
| CTB7000/18 | 18 | 90mm |
| CTB7000/36 | 36 | 180mm |

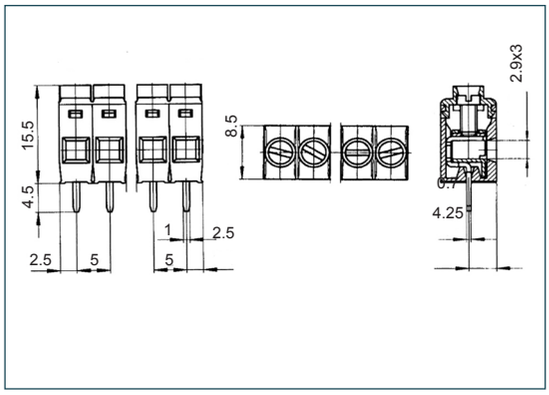


## KEY FEATURES

Professional rising clamp | Easily cut to required size | Unique 36 pole design

CUSTOMISE ME PRINTING